PROJECT MANUAL

VOLUME 1 OF 2

SENIOR CENTER
LEBANON AVENUE
COLCHESTER, CT 06415

BID #2022-013
S/P+A PROJECT #20.003

95% CD Submission: June 20, 2022
DECD Submission: July 23, 2022
Issued for Bid: September 9, 2022

Architects/Engineers/Interior Designers
Silver/Petrucelli + Associates, Inc.
3190 Whitney Avenue, Hamden, Connecticut 06518
One Post Hill Place, New London, Connecticut 06320

SENIOR CENTER
LEBANON AVENUE
COLCHESTER, CT 06415
BID #2022-013

S/P+A PROJECT #20.003

DIVISION 09 – FINISHES

DIVISION 10 – SPECIALTIES

DIVISION 11 – EQUIPMENT

DIVISION 12 – FURNISHINGS

DIVISION 21 – FIRE PROTECTION

DIVISION 31 – EARTHWORK

DIVISION 32 – EXTERIOR IMPROVEMENTS

DIVISION 33 – UTILITIES

END OF TABLE OF CONTENTS

Legal Notice

TOWN OF COLCHESTER
Selectmen's Office
127 Norwich Avenue – Colchester, CT 06415
Tel (860) 537-7220

INVITATION TO BID

Notice is hereby given that sealed bids by which the Town of Colchester will contract for the

New Senior Center
Bid #2022-013

will be received in the Selectmen's Office, Colchester Town Hall, 127 Norwich Ave, until

2:00 pm, Thursday, October 6, 2022

when bids will be publicly opened and read aloud at Colchester Town Hall, Meeting Room #1.

A non-mandatory pre-bid meeting between prospective bidders and the Owner/Architect will convene at Colchester Town Hall, Meeting Room #1, **127 Norwich Avenue, Colchester, September 20, 2022 at 10:00 am** when project details will be discussed and questions answered. All prospective bidders are urged to attend.

A bid bond for five percent (5%) of the base bid cost is required and must accompany each proposal.
Bids must be held firm for ninety (90) days beyond the bid opening date.

The successful bidder must file a one hundred percent (100%) Performance Bond, a one hundred percent (100%) Labor & Materials Bond and a Certificate of Insurance with the Purchasing Agent within ten (10) days of notice of bid award.

Attention of bidders is directed to certain requirements of this contract which require payment of minimum wages and compliance with certain local, state, and federal requirements.

Plans and specifications must be obtained directly from the Town of Colchester's website, www.colchesterct.gov/doing-business-colchester, under the RFP/RFQ tab, at no cost to the Contractor.
Each bidder is responsible for checking the website to determine if any addenda have been issued.

In accordance with Connecticut General Statute Sections 4a-100 and 4b-91, a responsible bid must contain two (2) documents: The Contractor Prequalification Certificate and the Update (Bid) Statement. The classification GENERAL BUILDING CONSTRUCTION (GROUP B) is required as a minimum.

This contract is subject to state contract compliance requirements, including non-discrimination statutes and set-aside requirements. State law requires a minimum of twenty-five percent (25%) of the state-funded portion of the contract be set aside for award to subcontractors holding current certification as Small Business Enterprises (SBE) from the CT Department of Administrative Services (DAS). A minimum of six and one-quarter percent (6.25%) of the state-funded portion must be set aside for subcontractors holding current DAS certification as Minority-, Women-, and/or Disabled-owned businesses (M/W/DisBE). The Contractor must demonstrate good faith effort to meet the twenty-five percent (25%) set-aside goals.

The Town of Colchester reserves the right to reject any and all bids or any part thereof, or to waive defects in same, or to accept any proposal, or part thereof, deemed to be in the best interest of the Town of Colchester for whatever reason.

An Affirmative Action/Equal Opportunity Employer.
Minority/Women's Business Enterprises are encouraged to apply.

DRAFT

AIA® Document A701™ – 2018

Instructions to Bidders

for the following Project:
(Name, location, and detailed description)

« »
« »
« »

THE OWNER:
(Name, legal status, address, and other information)

« »« »
« »
« »
« »

THE ARCHITECT:
(Name, legal status, address, and other information)

« »« »
« »
« »
« »

TABLE OF ARTICLES

ADDITIONS AND DELETIONS: The author of this document has added information needed for its completion. The author may also have revised the text of the original AIA standard form. An *Additions and Deletions Report* that notes added information as well as revisions to the standard form text is available from the author and should be reviewed.

This document has important legal consequences. Consultation with an attorney is encouraged with respect to its completion or modification.

FEDERAL, STATE, AND LOCAL LAWS MAY IMPOSE REQUIREMENTS ON PUBLIC PROCUREMENT CONTRACTS. CONSULT LOCAL AUTHORITIES OR AN ATTORNEY TO VERIFY REQUIREMENTS APPLICABLE TO THIS PROCUREMENT BEFORE COMPLETING THIS FORM.

It is intended that AIA Document G612™–2017, Owner's Instructions to the Architect, Parts A and B will be completed prior to using this document.

ELECTRONIC COPYING of any portion of this AIA® Document to another electronic file is prohibited and constitutes a violation of copyright laws as set forth in the footer of this document.

ARTICLE 1 DEFINITIONS

§ 1.1 Bidding Documents include the Bidding Requirements and the Proposed Contract Documents. The Bidding Requirements consist of the advertisement or invitation to bid, Instructions to Bidders, supplementary instructions to bidders, the bid form, and any other bidding forms. The Proposed Contract Documents consist of the unexecuted form of Agreement between the Owner and Contractor and that Agreement's Exhibits, Conditions of the Contract (General, Supplementary and other Conditions), Drawings, Specifications, all Addenda, and all other documents enumerated in Article 8 of these Instructions.

§ 1.2 Definitions set forth in the General Conditions of the Contract for Construction, or in other Proposed Contract Documents apply to the Bidding Documents.

§ 1.3 Addenda are written or graphic instruments issued by the Architect, which, by additions, deletions, clarifications, or corrections, modify or interpret the Bidding Documents.

§ 1.4 A Bid is a complete and properly executed proposal to do the Work for the sums stipulated therein, submitted in accordance with the Bidding Documents.

§ 1.5 The Base Bid is the sum stated in the Bid for which the Bidder offers to perform the Work described in the Bidding Documents, to which Work may be added or deleted by sums stated in Alternate Bids.

§ 1.6 An Alternate Bid (or Alternate) is an amount stated in the Bid to be added to or deducted from, or that does not change, the Base Bid if the corresponding change in the Work, as described in the Bidding Documents, is accepted.

§ 1.7 A Unit Price is an amount stated in the Bid as a price per unit of measurement for materials, equipment, or services, or a portion of the Work, as described in the Bidding Documents.

§ 1.8 A Bidder is a person or entity who submits a Bid and who meets the requirements set forth in the Bidding Documents.

§ 1.9 A Sub-bidder is a person or entity who submits a bid to a Bidder for materials, equipment, or labor for a portion of the Work.

ARTICLE 2 BIDDER'S REPRESENTATIONS

§ 2.1 By submitting a Bid, the Bidder represents that:

- **.1** the Bidder has read and understands the Bidding Documents;
- **.2** the Bidder understands how the Bidding Documents relate to other portions of the Project, if any, being bid concurrently or presently under construction;
- **.3** the Bid complies with the Bidding Documents;
- **.4** the Bidder has visited the site, become familiar with local conditions under which the Work is to be performed, and has correlated the Bidder's observations with the requirements of the Proposed Contract Documents;
- **.5** the Bid is based upon the materials, equipment, and systems required by the Bidding Documents without exception; and
- **.6** the Bidder has read and understands the provisions for liquidated damages, if any, set forth in the form of Agreement between the Owner and Contractor.

ARTICLE 3 BIDDING DOCUMENTS

§ 3.1 Distribution

§ 3.1.1 Bidders shall obtain complete Bidding Documents, as indicated below, from the issuing office designated in the advertisement or invitation to bid, for the deposit sum, if any, stated therein.
(Indicate how, such as by email, website, host site/platform, paper copy, or other method Bidders shall obtain Bidding Documents.)

« »

§ 3.1.2 Any required deposit shall be refunded to Bidders who submit a bona fide Bid and return the paper Bidding Documents in good condition within ten days after receipt of Bids. The cost to replace missing or damaged paper

documents will be deducted from the deposit. A Bidder receiving a Contract award may retain the paper Bidding Documents, and the Bidder's deposit will be refunded.

§ 3.1.3 Bidding Documents will not be issued directly to Sub-bidders unless specifically offered in the advertisement or invitation to bid, or in supplementary instructions to bidders.

§ 3.1.4 Bidders shall use complete Bidding Documents in preparing Bids. Neither the Owner nor Architect assumes responsibility for errors or misinterpretations resulting from the use of incomplete Bidding Documents.

§ 3.1.5 The Bidding Documents will be available for the sole purpose of obtaining Bids on the Work. No license or grant of use is conferred by distribution of the Bidding Documents.

§ 3.2 Modification or Interpretation of Bidding Documents

§ 3.2.1 The Bidder shall carefully study the Bidding Documents, shall examine the site and local conditions, and shall notify the Architect of errors, inconsistencies, or ambiguities discovered and request clarification or interpretation pursuant to Section 3.2.2.

§ 3.2.2 Requests for clarification or interpretation of the Bidding Documents shall be submitted by the Bidder in writing and shall be received by the Architect at least seven days prior to the date for receipt of Bids.
(Indicate how, such as by email, website, host site/platform, paper copy, or other method Bidders shall submit requests for clarification and interpretation.)

« »

§ 3.2.3 Modifications and interpretations of the Bidding Documents shall be made by Addendum. Modifications and interpretations of the Bidding Documents made in any other manner shall not be binding, and Bidders shall not rely upon them.

§ 3.3 Substitutions

§ 3.3.1 The materials, products, and equipment described in the Bidding Documents establish a standard of required function, dimension, appearance, and quality to be met by any proposed substitution.

§ 3.3.2 Substitution Process

§ 3.3.2.1 Written requests for substitutions shall be received by the Architect at least ten days prior to the date for receipt of Bids. Requests shall be submitted in the same manner as that established for submitting clarifications and interpretations in Section 3.2.2.

§ 3.3.2.2 Bidders shall submit substitution requests on a Substitution Request Form if one is provided in the Bidding Documents.

§ 3.3.2.3 If a Substitution Request Form is not provided, requests shall include (1) the name of the material or equipment specified in the Bidding Documents; (2) the reason for the requested substitution; (3) a complete description of the proposed substitution including the name of the material or equipment proposed as the substitute, performance and test data, and relevant drawings; and (4) any other information necessary for an evaluation. The request shall include a statement setting forth changes in other materials, equipment, or other portions of the Work, including changes in the work of other contracts or the impact on any Project Certifications (such as LEED), that will result from incorporation of the proposed substitution.

§ 3.3.3 The burden of proof of the merit of the proposed substitution is upon the proposer. The Architect's decision of approval or disapproval of a proposed substitution shall be final.

§ 3.3.4 If the Architect approves a proposed substitution prior to receipt of Bids, such approval shall be set forth in an Addendum. Approvals made in any other manner shall not be binding, and Bidders shall not rely upon them.

§ 3.3.5 No substitutions will be considered after the Contract award unless specifically provided for in the Contract Documents.

§ 3.4 Addenda

§ 3.4.1 Addenda will be transmitted to Bidders known by the issuing office to have received complete Bidding Documents.

(Indicate how, such as by email, website, host site/platform, paper copy, or other method Addenda will be transmitted.)

« »

§ 3.4.2 Addenda will be available where Bidding Documents are on file.

§ 3.4.3 Addenda will be issued no later than four days prior to the date for receipt of Bids, except an Addendum withdrawing the request for Bids or one which includes postponement of the date for receipt of Bids.

§ 3.4.4 Prior to submitting a Bid, each Bidder shall ascertain that the Bidder has received all Addenda issued, and the Bidder shall acknowledge their receipt in the Bid.

ARTICLE 4 BIDDING PROCEDURES

§ 4.1 Preparation of Bids

§ 4.1.1 Bids shall be submitted on the forms included with or identified in the Bidding Documents.

§ 4.1.2 All blanks on the bid form shall be legibly executed. Paper bid forms shall be executed in a non-erasable medium.

§ 4.1.3 Sums shall be expressed in both words and numbers, unless noted otherwise on the bid form. In case of discrepancy, the amount entered in words shall govern.

§ 4.1.4 Edits to entries made on paper bid forms must be initialed by the signer of the Bid.

§ 4.1.5 All requested Alternates shall be bid. If no change in the Base Bid is required, enter "No Change" or as required by the bid form.

§ 4.1.6 Where two or more Bids for designated portions of the Work have been requested, the Bidder may, without forfeiture of the bid security, state the Bidder's refusal to accept award of less than the combination of Bids stipulated by the Bidder. The Bidder shall neither make additional stipulations on the bid form nor qualify the Bid in any other manner.

§ 4.1.7 Each copy of the Bid shall state the legal name and legal status of the Bidder. As part of the documentation submitted with the Bid, the Bidder shall provide evidence of its legal authority to perform the Work in the jurisdiction where the Project is located. Each copy of the Bid shall be signed by the person or persons legally authorized to bind the Bidder to a contract. A Bid by a corporation shall further name the state of incorporation and have the corporate seal affixed. A Bid submitted by an agent shall have a current power of attorney attached, certifying the agent's authority to bind the Bidder.

§ 4.1.8 A Bidder shall incur all costs associated with the preparation of its Bid.

§ 4.2 Bid Security

§ 4.2.1 Each Bid shall be accompanied by the following bid security:

(Insert the form and amount of bid security.)

« »

§ 4.2.2 The Bidder pledges to enter into a Contract with the Owner on the terms stated in the Bid and shall, if required, furnish bonds covering the faithful performance of the Contract and payment of all obligations arising thereunder. Should the Bidder refuse to enter into such Contract or fail to furnish such bonds if required, the amount of the bid security shall be forfeited to the Owner as liquidated damages, not as a penalty. In the event the Owner fails to comply with Section 6.2, the amount of the bid security shall not be forfeited to the Owner.

§ 4.2.3 If a surety bond is required as bid security, it shall be written on AIA Document A310™, Bid Bond, unless otherwise provided in the Bidding Documents. The attorney-in-fact who executes the bond on behalf of the surety shall

affix to the bond a certified and current copy of an acceptable power of attorney. The Bidder shall provide surety bonds from a company or companies lawfully authorized to issue surety bonds in the jurisdiction where the Project is located.

§ 4.2.4 The Owner will have the right to retain the bid security of Bidders to whom an award is being considered until (a) the Contract has been executed and bonds, if required, have been furnished; (b) the specified time has elapsed so that Bids may be withdrawn; or (c) all Bids have been rejected. However, if no Contract has been awarded or a Bidder has not been notified of the acceptance of its Bid, a Bidder may, beginning« »days after the opening of Bids, withdraw its Bid and request the return of its bid security.

§ 4.3 Submission of Bids

§ 4.3.1 A Bidder shall submit its Bid as indicated below:
(Indicate how, such as by website, host site/platform, paper copy, or other method Bidders shall submit their Bid.)

« »

§ 4.3.2 Paper copies of the Bid, the bid security, and any other documents required to be submitted with the Bid shall be enclosed in a sealed opaque envelope. The envelope shall be addressed to the party receiving the Bids and shall be identified with the Project name, the Bidder's name and address, and, if applicable, the designated portion of the Work for which the Bid is submitted. If the Bid is sent by mail, the sealed envelope shall be enclosed in a separate mailing envelope with the notation "SEALED BID ENCLOSED" on the face thereof.

§ 4.3.3 Bids shall be submitted by the date and time and at the place indicated in the invitation to bid. Bids submitted after the date and time for receipt of Bids, or at an incorrect place, will not be accepted.

§ 4.3.4 The Bidder shall assume full responsibility for timely delivery at the location designated for receipt of Bids.

§ 4.3.5 A Bid submitted by any method other than as provided in this Section 4.3 will not be accepted.

§ 4.4 Modification or Withdrawal of Bid

§ 4.4.1 Prior to the date and time designated for receipt of Bids, a Bidder may submit a new Bid to replace a Bid previously submitted, or withdraw its Bid entirely, by notice to the party designated to receive the Bids. Such notice shall be received and duly recorded by the receiving party on or before the date and time set for receipt of Bids. The receiving party shall verify that replaced or withdrawn Bids are removed from the other submitted Bids and not considered. Notice of submission of a replacement Bid or withdrawal of a Bid shall be worded so as not to reveal the amount of the original Bid.

§ 4.4.2 Withdrawn Bids may be resubmitted up to the date and time designated for the receipt of Bids in the same format as that established in Section 4.3, provided they fully conform with these Instructions to Bidders. Bid security shall be in an amount sufficient for the Bid as resubmitted.

§ 4.4.3 After the date and time designated for receipt of Bids, a Bidder who discovers that it made a clerical error in its Bid shall notify the Architect of such error within two days, or pursuant to a timeframe specified by the law of the jurisdiction where the Project is located, requesting withdrawal of its Bid. Upon providing evidence of such error to the reasonable satisfaction of the Architect, the Bid shall be withdrawn and not resubmitted. If a Bid is withdrawn pursuant to this Section 4.4.3, the bid security will be attended to as follows:
(State the terms and conditions, such as Bid rank, for returning or retaining the bid security.)

« »

ARTICLE 5 CONSIDERATION OF BIDS

§ 5.1 Opening of Bids

If stipulated in an advertisement or invitation to bid, or when otherwise required by law, Bids properly identified and received within the specified time limits will be publicly opened and read aloud. A summary of the Bids may be made available to Bidders.

§ 5.2 Rejection of Bids

Unless otherwise prohibited by law, the Owner shall have the right to reject any or all Bids.

§ 5.3 Acceptance of Bid (Award)

§ 5.3.1 It is the intent of the Owner to award a Contract to the lowest responsive and responsible Bidder, provided the Bid has been submitted in accordance with the requirements of the Bidding Documents. Unless otherwise prohibited by law, the Owner shall have the right to waive informalities and irregularities in a Bid received and to accept the Bid which, in the Owner's judgment, is in the Owner's best interests.

§ 5.3.2 Unless otherwise prohibited by law, the Owner shall have the right to accept Alternates in any order or combination, unless otherwise specifically provided in the Bidding Documents, and to determine the lowest responsive and responsible Bidder on the basis of the sum of the Base Bid and Alternates accepted.

ARTICLE 6 POST-BID INFORMATION

§ 6.1 Contractor's Qualification Statement

Bidders to whom award of a Contract is under consideration shall submit to the Architect, upon request and within the timeframe specified by the Architect, a properly executed AIA Document A305™, Contractor's Qualification Statement, unless such a Statement has been previously required and submitted for this Bid.

§ 6.2 Owner's Financial Capability

A Bidder to whom award of a Contract is under consideration may request in writing, fourteen days prior to the expiration of the time for withdrawal of Bids, that the Owner furnish to the Bidder reasonable evidence that financial arrangements have been made to fulfill the Owner's obligations under the Contract. The Owner shall then furnish such reasonable evidence to the Bidder no later than seven days prior to the expiration of the time for withdrawal of Bids. Unless such reasonable evidence is furnished within the allotted time, the Bidder will not be required to execute the Agreement between the Owner and Contractor.

§ 6.3 Submittals

§ 6.3.1 After notification of selection for the award of the Contract, the Bidder shall, as soon as practicable or as stipulated in the Bidding Documents, submit in writing to the Owner through the Architect:

- **.1** a designation of the Work to be performed with the Bidder's own forces;
- **.2** names of the principal products and systems proposed for the Work and the manufacturers and suppliers of each; and
- **.3** names of persons or entities (including those who are to furnish materials or equipment fabricated to a special design) proposed for the principal portions of the Work.

§ 6.3.2 The Bidder will be required to establish to the satisfaction of the Architect and Owner the reliability and responsibility of the persons or entities proposed to furnish and perform the Work described in the Bidding Documents.

§ 6.3.3 Prior to the execution of the Contract, the Architect will notify the Bidder if either the Owner or Architect, after due investigation, has reasonable objection to a person or entity proposed by the Bidder. If the Owner or Architect has reasonable objection to a proposed person or entity, the Bidder may, at the Bidder's option, withdraw the Bid or submit an acceptable substitute person or entity. The Bidder may also submit any required adjustment in the Base Bid or Alternate Bid to account for the difference in cost occasioned by such substitution. The Owner may accept the adjusted bid price or disqualify the Bidder. In the event of either withdrawal or disqualification, bid security will not be forfeited.

§ 6.3.4 Persons and entities proposed by the Bidder and to whom the Owner and Architect have made no reasonable objection must be used on the Work for which they were proposed and shall not be changed except with the written consent of the Owner and Architect.

ARTICLE 7 PERFORMANCE BOND AND PAYMENT BOND

§ 7.1 Bond Requirements

§ 7.1.1 If stipulated in the Bidding Documents, the Bidder shall furnish bonds covering the faithful performance of the Contract and payment of all obligations arising thereunder.

§ 7.1.2 If the furnishing of such bonds is stipulated in the Bidding Documents, the cost shall be included in the Bid. If the furnishing of such bonds is required after receipt of bids and before execution of the Contract, the cost of such bonds shall be added to the Bid in determining the Contract Sum.

§ 7.1.3 The Bidder shall provide surety bonds from a company or companies lawfully authorized to issue surety bonds in the jurisdiction where the Project is located.

§ 7.1.4 Unless otherwise indicated below, the Penal Sum of the Payment and Performance Bonds shall be the amount of the Contract Sum.
(If Payment or Performance Bonds are to be in an amount other than 100% of the Contract Sum, indicate the dollar amount or percentage of the Contract Sum.)

« »

§ 7.2 Time of Delivery and Form of Bonds
§ 7.2.1 The Bidder shall deliver the required bonds to the Owner not later than three days following the date of execution of the Contract. If the Work is to commence sooner in response to a letter of intent, the Bidder shall, prior to commencement of the Work, submit evidence satisfactory to the Owner that such bonds will be furnished and delivered in accordance with this Section 7.2.1.

§ 7.2.2 Unless otherwise provided, the bonds shall be written on AIA Document A312, Performance Bond and Payment Bond.

§ 7.2.3 The bonds shall be dated on or after the date of the Contract.

§ 7.2.4 The Bidder shall require the attorney-in-fact who executes the required bonds on behalf of the surety to affix to the bond a certified and current copy of the power of attorney.

ARTICLE 8 ENUMERATION OF THE PROPOSED CONTRACT DOCUMENTS

§ 8.1 Copies of the proposed Contract Documents have been made available to the Bidder and consist of the following documents:

.1 AIA Document A101™–2017, Standard Form of Agreement Between Owner and Contractor, unless otherwise stated below.
(Insert the complete AIA Document number, including year, and Document title.)

« »

.2 AIA Document A101™–2017, Exhibit A, Insurance and Bonds, unless otherwise stated below.
(Insert the complete AIA Document number, including year, and Document title.)

« »

.3 AIA Document A201™–2017, General Conditions of the Contract for Construction, unless otherwise stated below.
(Insert the complete AIA Document number, including year, and Document title.)

« »

.4 AIA Document E203™–2013, Building Information Modeling and Digital Data Exhibit, dated as indicated below:
(Insert the date of the E203-2013.)

« »

.5 Drawings

Number	Title	Date

.6 Specifications

Section	Title	Date	Pages

.7 Addenda:

Number	Date	Pages

.8 Other Exhibits:
(Check all boxes that apply and include appropriate information identifying the exhibit where required.)

[« »] AIA Document E204™–2017, Sustainable Projects Exhibit, dated as indicated below:
(Insert the date of the E204-2017.)

« »

[« »] The Sustainability Plan:

Title	Date	Pages

[« »] Supplementary and other Conditions of the Contract:

Document	Title	Date	Pages

.9 Other documents listed below:
(List here any additional documents that are intended to form part of the Proposed Contract Documents.)

« »

PART 1 - GENERAL

1.1 COMPLETION DATE

A. All work as required by these specifications and drawings shall be completed by the date stipulated in the bid form. There is no exception to this contract requirement, unless approved otherwise by contract change order.

B. If the Contractor neglects, fails, or refuses to achieve substantial completion by 11:59 pm by the date stipulated in the bid form for each of the bid components requiring durations or deadlines, liquidated damages of Five Hundred Dollars ($500.00) per day or part thereof shall be due for each bid component to the Owner and subtracted from the unpaid contract amount or bond held by the Owner. "Substantial completion" is as defined in the General Conditions of the Contract for Construction, AIA Document A201 included in this project manual. "Substantial completion" is further defined as the date at which the local authorities with jurisdiction over this project grant a temporary or permanent certificate of occupancy (if required for occupancy) for each project area.

1.2 QUESTIONS

A. Questions regarding this bid can be directed, in writing only, to:

Technical/Construction
Mr. Christopher Nardi, Project Architect
Silver/Petrucelli + Associates, Inc.
3190 Whitney Avenue, Bldg. 2
Hamden, CT 06518
Tel: 203-230-9007 x209
Email: cnardi@silverpetrucelli.com

1.3 RESPONSIBILITY FOR MEASUREMENT OF QUANTITIES

A. The Contractor shall have sole responsibility for the accuracy of all measurements and for estimating the material quantities required to satisfy these specifications.

1.4 DISCREPANCIES AND ADDENDA

A. Should a Bidder find any discrepancies in the Drawings and Specifications, or should they be in doubt as to their meaning, they shall notify the Owner at once, who will send a written Addendum to all Bidders concerned. Oral instructions or decisions, unless confirmed by Addenda, will not be considered valid, legal, or binding. No change order requests will be authorized or considered because of the failure of the Contractor to include work called for in the Addenda in their bid.

1.5 MODIFICATIONS TO AIA DOCUMENT A701, Instructions to Bidders, 2018.

The following sections modify the provisions and procedures to the degree listed in the sections and articles listed in these supplementary instructions.

TITLE PAGE **Make the following changes:**

Project: Senior Center
Lebanon Avenue
Colchester, CT 06415

Owner: Town of Colchester
127 Norwich Avenue
Colchester, CT 06415

Architect: Silver/Petrucelli + Associates
3190 Whitney Avenue, Building 2
Hamden, CT 06518

ARTICLE 3 **Make the following changes:**

3.1.1 **Delete** all but the first sentence and “, as indicated below,” from the first sentence.

3.1.2 **Delete** in its entirety.

3.2.2 **Delete** all but the first sentence.

3.3.2.1 **Delete** all but the first sentence.

3.4.1 **Delete** all but the first sentence.

3.4.3 **Delete the phrase** "four days prior to the date for receipt" and insert "24 hours prior to the date and time for receipt".

ARTICLE 4 **Make the following changes:**

4.2.1 **Revise to read as follows:** “Each Bid shall be accompanied by the bid security as indicated on the Invitation to Bid.”

4.2.4 **Revise last sentence to read as follows:** “However, if no Contract has been awarded or a Bidder has not been notified of the acceptance of its Bid, a Bidder may withdraw its Bid and request the return of its bid security after the length of time on the Invitation to Bid.”

4.3.1 **Add to the end the following:** “Paper copy”.

4.4.3 **Add to the end the following:** “Owner will return bid security to the Bidder.”

ARTICLE 5 **Make the following changes:**

5.3.1 **Revise** “lowest responsive and responsible Bidder” to read “lowest responsible and qualified Bidder”.

Add the following:

5.3.3 Contractors who have paid liquidated damages or penalties to an Owner for failing to comply with the schedule of any project in the last five (5) years are disqualified from

this project, subject to an appeal to the Owner's Representative(s) where the Contractor demonstrates that 1) subsequent to the project which resulted in penalties the Contractor completed two (2) similar projects or demonstrably similar projects in a timely fashion; and 2) that the factors which lead to delays and penalties in the first instance no longer exist. Payment of liquidated damages or penalties may also be defined as "having been found by the Owner to be in non-compliance with the project schedule and negotiating a financial settlement for the project in which value was returned to the Owner, either via change orders or 'work-in-kind' or other recognized manner". The Contractor under consideration shall respond to this clause in the Contractor's Qualification Statement, A305 as indicated in Section 6.1 of the Instructions to Bidders, A701.

ARTICLE 6 **Add the following:**

6.1.1 The Owner will make investigations as he deems necessary to determine the ability of the Bidder to perform the Work, and the Bidder shall furnish the Owner all such information and data for this purpose as the Owner may request.

6.4 Work Phasing Schedule

Bidders to whom award of the Contractor is under consideration shall submit to the Architect within fifteen (15) days of the Contract date, a detailed work Phasing Schedule describing the bodies of work to be undertaken and areas of the project to be addressed in per week periods between the Award of the Contract and the Bidder's proposed date of Substantial Completion.

ARTICLE 7 **Make the following changes:**

7.2.1 **Revise the first sentence to read:** "The Bidder shall deliver the required bonds to the owner not later than the time frame indicate on the Invitation to Bid."

Add the following:

7.3 The Contractor and the Surety, jointly and severally, bind themselves, their heirs, executors, administrators, successors and assigns to the Owner for the performance of the Construction Contract, which is incorporated herein by reference.

7.4 If the Contractor performs the Construction Contract, the Surety and the Contractor shall have no obligation under this Bond, except to participate in conferences as provided in Subparagraph 7.5.1.

7.5 If there is no Owner Default, the Surety's obligation under this Bond shall arise after:

7.5.1 The Owner has notified the Contractor and the Surety at its address described in Paragraph 7.12 below that the Owner is considering declaring a Contractor Default and has requested and attempted to arrange a conference with the Contractor and the Surety to be held not later than fifteen (15) days after receipt of such notice to discuss methods of performing the Construction Contract. If the Owner, the Contractor, and the Surety agree, the Contractor shall be allowed a reasonable time to perform the Construction Contract, but such an agreement shall not waive the Owner's right, if any, subsequently to declare a Contractor Default and

7.5.2 The Owner has declared a Contractor Default and formally terminated the Contractor's right to complete the contract. Such Contractor Default shall not be declared earlier than twenty (20) days after the Contractor and the Surety have received notice as provided in Subparagraph 7.5.1; and

7.5.3 The Owner has agreed to pay the Balance of the Contract Price to the Surety in accordance with the terms of the Construction Contract or to a contractor selected to perform the Construction Contract in accordance with the terms of the contract with the Owner.

7.6 When the Owner has satisfied the conditions of Paragraph 7.5.3, the Surety shall promptly and at the Surety's expense take one of the following actions:

7.6.1 Arrange for the Contractor, with consent of the Owner, to perform and complete the Construction Contract; or

7.6.2 Undertake to perform and complete the Construction Contract itself, through its agents or through independent contractors; or

7.6.3 Obtain bids or negotiated proposals from qualified contractors acceptable to the Owner for a contract for performance and completion of the Construction Contract, arrange for a contract to be prepared for execution by the Owner and the contractor selected with the Owner's concurrence, to be secured with performance and payment bonds executed by a qualified surety equivalent to the bonds issued on the Construction Contract, and pay to the Owner the amount of damages (as described in Paragraph 7.8) in excess of the Balance of the Contract Price incurred by the Owner resulting from the Contractor's default: or

7.6.4 Waive its right to perform and complete, arrange for completion, or obtain a new contractor and with reasonable promptness under the circumstances:

.1 After investigation, determine the amount for which it may be liable to the Owner and, as soon as practicable after the amount is determined, tender payment therefore to the Owner; or

.2 Deny liability in whole or in part and notify the Owner citing reasons therefore.

7.7 If the Surety does not proceed as provided in Paragraph 7.6 with reasonable promptness, the Surety shall be deemed to be in default on this Bond fifteen (15) days after receipt of an additional written notice from the Owner to the Surety demanding that the Surety perform its obligations under this Bond, and the Owner shall be entitled to enforce any remedy available to the Owner. If the Surety proceeds as provided in Subparagraph 7.6.4, and the Owner refuses the payment rendered or the Surety has denied liability, in whole or in part, without further notice the Owner shall be entitled to enforce any remedy available to the Owner.

7.8 After the Owner has terminated the Contractor's right to complete the Construction Contract, and if the Surety elects to act under Subparagraph 7.6.1, 7.6.2, or 7.6.3 above, then the responsibilities of the Surety to the Owner shall not be greater than those of the Contractor under the Construction Contract, and the responsibilities of the Owner to the Surety shall not be greater than those of the Owner under the Construction Contract. To the limit of the amount of this Bond, but subject to commitment by the Owner of the Balance of the Contract Price to

mitigation of costs and damages on the Construction Contract, the Surety is obligated without duplication for:

7.8.1 The responsibilities of the Contractor for correction of defective work and completion of the Construction Contract;

7.8.2 Additional legal, design professional and delay costs resulting from the Contractor's Default, and resulting from the actions or failure to act of the Surety under Paragraph 7.6; and

7.8.3 Late delivery penalties or if penalties are not specified in the Construction Contract, actual damages caused by delayed performance or non-performance of the Contractor.

7.9 The Surety shall not be liable to the Owner or others for obligations of the Contractor that are unrelated to the Construction Contract, and the Balance of the Contract Price shall not be reduced or set off on account of any such unrelated obligations. No right of action shall accrue on this Bond to any person or entity other than the Owner or its heirs, executors, administrators, or successors.

7.10 The Surety hereby waives notice of any change, including changes of time, to the Construction Contract or to related subcontracts, purchase orders, and other obligations.

7.11 Any proceeding, legal or equitable, under this Bond may be instituted in any court of competent jurisdiction in the location in which the work or part of the work is located and shall be instituted within two (2) years after Contractor Default or within two (2) years after the Contractor ceased working or within two (2) years after the Surety refuses or fails to perform its obligations under this Bond, whichever occurs first. If the provisions of this Paragraph are void or prohibited by law, the minimum period of limitation available to sureties as a defense in the jurisdiction of the suit shall be applicable.

7.12 Notice to the Surety, the Owner or the Contractor shall be mailed or delivered to the address shown on the signature page.

7.13 When this Bond has been furnished to comply with a statutory or other legal requirement in the location where the construction was to be performed, any provision in this Bond conflicting with said statutory or legal requirement shall be deemed deleted herefrom and provisions conforming to such statutory or other legal requirement shall be deemed incorporated herein. The intent is that this Bond shall be construed as a statutory bond and not as a common-law bond.

7.14 Definitions.

7.14.1 Balance of the Contract Price: The total amount payable by the Owner to the Contractor under the Construction Contract after all proper adjustments have been made, including allowance to the Contractor of any amounts received or to be received by the Owner in settlement of insurance or other claims for damages to which the Contractor is entitled, reduced by all valid and proper payments made to or on behalf of the Contractor under the Construction Contract.

7.14.2 Construction Contract: The agreement between the Owner and the Contractor identified on the signature page, including all Contract Documents and changes thereto.

7.14.3 Contractor Default: Failure of the Contractor, which has neither been remedied nor waived, to perform or otherwise to comply with the terms of the Construction Contract.

7.14.4 Owner Default: Failure of the Owner, which has neither been remedied nor waived, to pay the Contractor as required by the Construction Contract or to perform and complete or comply with the other terms thereof.

ARTICLE 8 Make the following changes:

Delete in its entirety.

Add the following Articles:

ARTICLE 9 MISCELLANEOUS REQUIREMENTS

9.1 Watchman
The employment of continuous watchman service to guard the property during any and all hours shall be at the discretion of the Contractor. However, the Contractor shall remove and restore all work or temporary structures damaged by fire, vandalism, or similar acts at no extra cost to the Owner.

9.2 Overtime
The Contractor must include within their base price all overtime, nights, holidays, and weekends as required to meet the Project Completion date.

9.3 Removal of Materials
All removed materials and rubbish shall be constantly sprinkled with water or other dusting agent to mitigate dust. Provide drop cloths or other type of coverings to prevent infiltration of dust to other parts of the existing building

9.4 Permits
The Contractor must obtain their own town and building permits at no additional charge to the Owner. Town of Colchester permits can be obtained from the Town of Colchester at a cost to the Contractor, including the State Education permit cost of $0.26/$1,000 value.

9.5 Supervision
The Contractor must provide full-time, properly qualified on-site supervision for the entire duration of the project, while workpersons are on site.

9.6 Department of Administrative Services (DAS)
In accordance with Connecticut General Statute Secs. 4a-100 and 4b-91, a responsible bid that exceeds $500,000 for this vertical building project must contain two (2) documents: **The Contractor Prequalification Certificate and the Update (Bid) Statement.** These two (2) documents must be submitted with the bid form. Contact the DAS Contractor Prequalification Unit at 860-713-5280 for more information. The classification GENERAL BUILDING CONSTRUCTION (GROUP B) is required as a minimum.

9.7 Commission on Human Rights and Opportunities (CHRO)

The Contractor who is selected to perform this State project must comply with CT General Statutes 4a-60, 4a-60a, 4a-60g, and 46a-68b through 46a-68f, inclusive, as amended by June 2015 Special Session Public Act 15-5.

State law requires a minimum of twenty-five (25%) percent of the state-funded portion of the contract be set aside for award to subcontractors holding current certification from the Connecticut Department of Administrative Services (DAS) under the provisions of CT General Statute 4a-60g. **(Twenty-five percent (25%) of the total state-funded value with DAS-certified Small Businesses and six and one-quarter percent (6.25%) of the total stat-funded value with DAS-certified Minority-, Women- and/or Disabled-Owned Businesses.)** The Contractor must demonstrate good faith effort to meet the twenty-five percent (25%) set-aside goals.

9.8 Public Health Emergency

The Contractor shall anticipate and incorporate in their Bid all potential costs related to a public health emergency such as the COVID-19/Coronavirus Pandemic, including rules, regulations, and recommendations issued by public authorities. The potential costs may include, but are not limited to, costs related to social distancing, manpower levels, project scheduling, construction coordination, material/product supplies and delivery delays, material escalation costs, increased subcontractor/supplier costs, loss of productivity and inefficiency costs, extended general conditions costs, and any other potential costs.

ARTICLE 10 BIDDERS REPRESENTATION

Each bidder shall fully acquaint himself with conditions as they exist, so that he fully understands the complexities and restrictions attending the execution of the Work included in the Bid Documents. The failure to receive or examine any form, instrument, or document, or to visit the site to become acquainted with field conditions, shall in no way relieve the Bidder from any obligation with respect to the Bidder's proposal.

END OF SECTION

(To be submitted in duplicate)

BIDDER: _____
Name

_____
Address

To: **First Selectman**
Town of Colchester
127 Norwich Avenue
Colchester, CT 06415

Project: **New Senior Center**
Lebanon Avenue
Colchester, CT 06415
Bid #2022-013

In preparing this bid, we have carefully examined the Bidding Documents for this Project. We have visited the site and noted the conditions affecting the Work.

The Bidding Documents referred to include Drawings and Project Manual dated September 9, 2022, prepared by Silver/Petrucelli + Associates, Inc., Hamden, Connecticut.

We propose to perform the work described in the Bidding Documents, in keeping with definitions of Article 1 of the Instructions to Bidders, for the Base Bid Sum as follows:

Base Bid:

Entire Project for the Total Cost of:

$ _____ Dollars ($ .00).
written figure

We will commence work on the project _____ calendar days after receipt of "Notice to Proceed" or signing of Contract, whichever is sooner. We will be able to substantially complete the project within three hundred sixty-five (365) calendar days thereafter. (Also refer to SIB 1.1.B).

Alternates:

The undersigned proposes to furnish all Labor, Materials, Equipment and Services necessary to construct the items listed in the Alternates described in Section 012300 for the stipulated sum of:

ADD ALTERNATE #1: Generator: Add to the Base Bid a Total of:

$ _____ Dollars ($ .00).
written figure

The project schedule will be (increased/decreased) by _____ calendar days to complete the work indicated under Add Alternate #1.

ADD ALTERNATE #2: Coffered Ceiling Molding & Trim: Add to the Base Bid a Total of:

$ _____ Dollars ($ .00).
written figure

The project schedule will be (increased/decreased) by _____ calendar days to complete the work indicated under Add Alternate #2.

DEDUCT ALTERNATE #3: Plantings: Deduct from the Base Bid a Total of:

$ _____ Dollars ($ .00).
written figure

The project schedule will be (increased/decreased) by _____ calendar days to complete the work indicated under Deduct Alternate #3.

DEDUCT ALTERNATE #4: Parking: Deduct from the Base Bid a Total of:

$ _____ Dollars ($ .00).
written figure

The project schedule will be (increased/decreased) by _____ calendar days to complete the work indicated under Deduct Alternate #4.

DEDUCT ALTERNATE #5: Wainscot Panels and Stiles: Deduct from the Base Bid a Total of:

$ _____ Dollars ($ .00).
written figure

The project schedule will be (increased/decreased) by _____ calendar days to complete the work indicated under Deduct Alternate #5.

DEDUCT ALTERNATE #6: Asphalt Shingles: Deduct from the Base Bid a Total of:

$ _____ Dollars ($ .00).
written figure

The project schedule will be (increased/decreased) by _____ calendar days to complete the work indicated under Deduct Alternate #6.

DEDUCT ALTERNATE #7: Kitchen Equipment: Deduct from the Base Bid a Total of:

$ _____ Dollars ($ .00).
written figure

The project schedule will be (increased/decreased) by _____ calendar days to complete the work indicated under Deduct Alternate #7.

ALTERNATE #8: Voluntary Alternate

For the work, methods, procedures, or materials referenced below, we propose to (Add/Deduct) from the Base Bid a total of:

$ _____ Dollars ($ .00).
written figure

The project schedule will be (added) (decreased) by _____ calendar days to complete the work indicated under Alternate #8.

Voluntary Alternate Summary Description:_____
_____
_____
_____

If written notice of the acceptance of this Bid is mailed, telegraphed, or delivered to the undersigned at the Address designated below, within ninety (90) days after the date of Bid Opening, or any time thereafter before this Bid is withdrawn, the undersigned will, within ten (10) days after the date of mailing, telegraphing, or delivering of the notice, execute and deliver a contract in the Standard Form of Agreement Between the Owner and Contractor, AIA Document A101, or similar contract modified as may be mutually agree upon.

The undersigned acknowledges that he has examined the documents, visited and examined the site as required under "Instructions to Bidders", examined the availability of labor and materials and further agrees to comply with all the requirements as to the conditions of employment and wage rates set forth by the Department of Labor.

Addenda:

The undersigned acknowledges receipt of the following addenda to the Contract Documents, listed by number and date:

Number , Dated: _____ Number , Dated: _____
Number , Dated: _____ Number , Dated: _____

Exceptions:_____
_____
_____
_____

ATTACHMENTS – Attached hereto is:

1. **Bid Bond**
2. **Contractor Prequalification Statement**
3. **Update Bid Statement**
4. **CHRO Bidder Contract Compliance Monitoring Report**

Signature: _____ Date: _____

Printed Name and Title
of Agent submitting bid: _____

Name of Company: _____

Address: _____

Telephone Number: _____ Fax Number: _____

E-mail: _____

This Bid may be withdrawn prior to the scheduled Bid Opening or any postponement thereof.

COMMISSION ON HUMAN RIGHTS AND OPPORTUNITIES
CONTRACT COMPLIANCE REGULATIONS
NOTIFICATION TO BIDDERS

(Revised 09/3/15)

The contract to be awarded is subject to contract compliance requirements mandated by Sections 4a-60 and 4a-60a of the Connecticut General Statutes; and, when the awarding agency is the State, Sections 46a-71(d) and 46a-81i(d) of the Connecticut General Statutes. There are Contract Compliance Regulations codified at Section 46a-68j-21 through 43 of the Regulations of Connecticut State Agencies, which establish a procedure for awarding all contracts covered by Sections 4a-60 and 46a-71(d) of the Connecticut General Statutes.

According to Section 46a-68j-30(9) of the Contract Compliance Regulations, every agency awarding a contract subject to the contract compliance requirements has an obligation to "aggressively solicit the participation of legitimate minority business enterprises as bidders, contractors, subcontractors and suppliers of materials." "Minority business enterprise" is defined in Section 4a-60 of the Connecticut General Statutes as a business wherein fifty-one percent or more of the capital stock, or assets belong to a person or persons: "(1) Who are active in daily affairs of the enterprise; (2) who have the power to direct the management and policies of the enterprise; and (3) who are members of a minority, as such term is defined in subsection (a) of Section 32-9n." "Minority" groups are defined in Section 32-9n of the Connecticut General Statutes as "(1) Black Americans . . . (2) Hispanic Americans . . . (3) persons who have origins in the Iberian Peninsula . . . (4)Women . . . (5) Asian Pacific Americans and Pacific Islanders; (6) American Indians . . ." An individual with a disability is also a minority business enterprise as provided by Section 4a-60g of the Connecticut General Statutes. The above definitions apply to the contract compliance requirements by virtue of Section 46a-68j-21(11) of the Contract Compliance Regulations.

The awarding agency will consider the following factors when reviewing the bidder's qualifications under the contract compliance requirements:

(a) the bidder's success in implementing an affirmative action plan;
(b) the bidder's success in developing an apprenticeship program complying with Sections 46a-68-1 to 46a-68-17 of the Administrative Regulations of Connecticut State Agencies, inclusive;
(c) the bidder's promise to develop and implement a successful affirmative action plan;
(d) the bidder's submission of employment statistics contained in the "Employment Information Form", indicating that the composition of its workforce is at or near parity when compared to the racial and sexual composition of the workforce in the relevant labor market area; and
(e) the bidder's promise to set aside a portion of the contract for legitimate minority business enterprises. See Section 46a-68j-30(10)(E) of the Contract Compliance Regulations.

INSTRUCTIONS AND OTHER INFORMATION

The following BIDDER CONTRACT COMPLIANCE MONITORING REPORT must be completed in full, signed, and submitted with the bid for this contract. The contract awarding agency and the Commission on Human Rights and Opportunities will use the information contained thereon to determine the bidders compliance to Sections 4a-60 and 4a-60a CONN. GEN. STAT., and Sections 46a-68j-23 of the Regulations of Connecticut State Agencies regarding equal employment opportunity, and the bidder's good faith efforts to include minority business enterprises as subcontractors and suppliers for the work of the contract.

1) Definition of Small Contractor

Section 4a-60g CONN. GEN. STAT. defines a small contractor as a company that has been doing business under the same management and control and has maintained its principal place of business in Connecticut for a one year period immediately prior to its application for certification under this section, had gross revenues not exceeding fifteen million dollars in the most recently completed fiscal year, and at least fifty-one percent of the ownership of which is held by a person or persons who are active in the daily affairs of the company, and have the power to direct the management and policies of the company, except that a nonprofit corporation shall be construed to be a small contractor if such nonprofit corporation meets the requirements of subparagraphs (A) and (B) of subdivision 4a-60g CONN. GEN. STAT.

MANAGEMENT: Managers plan, organize, direct, and control the major functions of an organization through subordinates who are at the managerial or supervisory level. They make policy decisions and set objectives for the company or departments. They are not usually directly involved in production or providing services. Examples include top executives, public relations managers, managers of operations specialties (such as financial, human resources, or purchasing managers), and construction and engineering managers.

BUSINESS AND FINANCIAL OPERATIONS: These occupations include managers and professionals who work with the financial aspects of the business. These occupations include accountants and auditors, purchasing agents, management analysts, labor relations specialists, and budget, credit, and financial analysts.

MARKETING AND SALES: Occupations related to the act or process of buying and selling products and/or services such as sales engineer, retail sales workers and sales representatives including wholesale.

LEGAL OCCUPATIONS: In-House Counsel who is charged with providing legal advice and services in regards to legal issues that may arise during the course of standard business practices. This category also includes assistive legal occupations such as paralegals, legal assistants.

COMPUTER SPECIALISTS: Professionals responsible for the computer operations within a company are grouped in this category. Examples of job titles in this category include computer programmers, software engineers, database administrators, computer scientists,systems analysts, and computer support specialists

ARCHITECTURE AND ENGINEERING: Occupations related to architecture, surveying, engineering, and drafting are included in this category. Some of the job titles in this category include electrical and electronic engineers, surveyors, architects, drafters, mechanical engineers, materials engineers, mapping technicians, and civil engineers.

OFFICE AND ADMINISTRATIVE SUPPORT: All clerical-type work is included in this category. These jobs involve the preparing, transcribing, and preserving of written communications and records; collecting accounts; gathering and distributing information; operating office machines and electronic data processing equipment; and distributing mail. Job titles listed in this category include telephone operators, bill and account collectors, customer service representatives, dispatchers, secretaries and administrative assistants, computer operators and clerks (such as payroll, shipping, stock, mail and file).

BUILDING AND GROUNDS CLEANING AND MAINTENANCE: This category includes occupations involving landscaping, housekeeping, and janitorial services. Job titles found in this category include supervisors of landscaping or housekeeping, janitors, maids, grounds maintenance workers, and pest control workers.

CONSTRUCTION AND EXTRACTION: This category includes construction trades and related occupations. Job titles found in this category include boilermakers, masons (all types), carpenters, construction laborers, electricians, plumbers (and related trades), roofers, sheet metal workers, elevator installers, hazardous materials removal workers, paperhangers, and painters. Paving, surfacing, and tamping equipment operators; drywall and ceiling tile installers; and carpet, floor and tile installers and finishers are also included in this category. First line supervisors, foremen, and helpers in these trades are also grouped in this category..

INSTALLATION, MAINTENANCE AND REPAIR: Occupations involving the installation, maintenance, and repair of equipment are included in this group. Examples of job titles found here are heating, ac, and refrigeration mechanics and installers; telecommunication line installers and repairers; heavy vehicle and mobile equipment service technicians and mechanics; small engine mechanics; security and fire alarm systems installers; electric/electronic repair, industrial, utility and transportation equipment; millwrights; riggers; and manufactured building and mobile home installers. First line supervisors, foremen, and helpers for these jobs are also included in the category.

MATERIAL MOVING WORKERS: The job titles included in this group are Crane and tower operators; dredge, excavating, and lading machine operators; hoist and winch operators; industrial truck and tractor operators; cleaners of vehicles and equipment; laborers and freight, stock, and material movers, hand; machine feeders and offbearers; packers and packagers, hand; pumping station operators; refuse and recyclable material collectors; and miscellaneous material moving workers.

PRODUCTION WORKERS: The job titles included in this category are chemical production machine setters, operators and tenders; crushing/grinding workers; cutting workers; inspectors, testers sorters, samplers, weighers; precious stone/metal workers; painting workers; cementing/gluing machine operators and tenders; etchers/engravers; molders, shapers and casters except for metal and plastic; and production workers.

3) Definition of Racial and Ethnic Terms (as used in Part IV Bidder Employment Information) (Page 3)

White (not of Hispanic Origin)- All persons having origins in any of the original peoples of Europe, North Africa, or the Middle East. Black(not of Hispanic Origin)- All persons having origins in any of the Black racial groups of Africa. Hispanic- All persons of Mexican, Puerto Rican, Cuban, Central or South American, or other Spanish culture or origin, regardless of race.	Asian or Pacific Islander- All persons having origins in any of the original peoples of the Far East, Southeast Asia, the Indian subcontinent, or the Pacific Islands. This area includes China, India, Japan, Korea, the Philippine Islands, and Samoa. American Indian or Alaskan Native- All persons having origins in any of the original peoples of North America, and who maintain cultural identification through tribal affiliation or community recognition.

BIDDER CONTRACT COMPLIANCE MONITORING REPORT

PART I - Bidder Information

Company Name Street Address City & State Chief Executive	Bidder Federal Employer Identification Number _____ Or Social Security Number_____
Major Business Activity (brief description)	Bidder Identification (response optional/definitions on page 1) -Bidder is a small contractor. Yes __No __ -Bidder is a minority business enterprise Yes __No __ (If yes, check ownership category) Black ___ Hispanic___ Asian American___ American Indian/Alaskan Native ___Iberian Peninsula___ Individual(s) with a Physical Disability___ Female ___
Bidder Parent Company (If any)	- Bidder is certified as above by State of CT Yes__ No__
Other Locations in Ct. (If any)	

PART II - Bidder Nondiscrimination Policies and Procedures

1. Does your company have a written Affirmative Action/Equal Employment Opportunity statement posted on company bulletin boards? Yes__ No__	7. Do all of your company contracts and purchase orders contain non-discrimination statements as required by Sections 4a-60 & 4a-60a Conn. Gen. Stat.? Yes__ No__
2. Does your company have the state-mandated sexual harassment prevention in the workplace policy posted on company bulletin boards? Yes__ No__	8. Do you, upon request, provide reasonable accommodation to employees, or applicants for employment, who have physical or mental disability? Yes__ No__
3. Do you notify all recruitment sources in writing of your company's Affirmative Action/Equal Employment Opportunity employment policy? Yes__ No__	9. Does your company have a mandatory retirement age for all employees? Yes__ No__
4. Do your company advertisements contain a written statement that you are an Affirmative Action/Equal Opportunity Employer? Yes __No __	10. If your company has 50 or more employees, have you provided at least two (2) hours of sexual harassment training to all of your supervisors? Yes__ No__ NA__
5. Do you notify the Ct. State Employment Service of all employment openings with your company? Yes __No __	11. If your company has apprenticeship programs, do they meet the Affirmative Action/Equal Employment Opportunity requirements of the apprenticeship standards of the Ct. Dept. of Labor? Yes __No __NA __
6. Does your company have a collective bargaining agreement with workers? Yes__ No__ 6a. If yes, do the collective bargaining agreements contain non-discrim ination clauses covering all workers? Yes__ No__ 6b. Have you notified each union in writing of your commitments under the nondiscrimination requirements of contracts with the state of Ct? Yes__ No__	12. Does your company have a written affirmative action Plan? Yes __No __ If no, please explain. 13. Is there a person in your company who is responsible for equal employment opportunity? Yes __No __ If yes, give name and phone number. _____

Part III - Bidder Subcontracting Practices

1. Will the work of this contract include subcontractors or suppliers? Yes__ No___

1a. If yes, please list all subcontractors and suppliers and report if they are a small contractor and/or a minority business enterprise. (defined on page 1 / use additional sheet if necessary)

1b. Will the work of this contract require additional subcontractors or suppliers other than those identified in 1a. above? Yes__ No__

PART IV - Bidder Employment Information

Date:

JOB CATEGORY *	OVERALL TOTALS	WHITE (not of Hispanic origin)		BLACK (not of Hispanic origin)		HISPANIC		ASIAN or PACIFIC ISLANDER		AMERICAN INDIAN or ALASKAN NATIVE	
		Male	Female	Male	Female	Male	Female	Male	Female	male	female
Management											
Business & Financial Ops											
Marketing & Sales											
Legal Occupations											
Computer Specialists											
Architecture/Engineering											
Office & Admin Support											
Bldg/ Grounds Cleaning/Maintenance											
Construction & Extraction											
Installation , Maintenance & Repair											
Material Moving Workers											
Production Occupations											
TOTALS ABOVE											
Total One Year Ago											
FORMAL ON THE JOB TRAINEES (ENTER FIGURES FOR THE SAME CATEGORIES AS ARE SHOWN ABOVE)											
Apprentices											
Trainees											

*NOTE: JOB CATEGORIES CAN BE CHANGED OR ADDED TO (EX. SALES CAN BE ADDED OR REPLACE A CATEGORY NOT USED IN YOUR COMPANY)

1. Which of the following recruitment sources are used by you? (Check yes or no, and report percent used)

SOURCE	YES	NO	% of applicants provided by source
State Employment Service			
Private Employment Agencies			
Schools and Colleges			
Newspaper Advertisement			
Walk Ins			
Present Employees			
Labor Organizations			
Minority/Community Organizations			
Others (please identify)			

2. Check (X) any of the below listed requirements that you use as a hiring qualification

(X)	
	Work Experience
	Ability to Speak or Write English
	Written Tests
	High School Diploma
	College Degree
	Union Membership
	Personal Recommendation
	Height or Weight
	Car Ownership
	Arrest Record
	Wage Garnishments

3. Describe below any other practices or actions that you take which show that you hire, train, and promote employees without discrimination

Certification (Read this form and check your statements on it CAREFULLY before signing). I certify that the statements made by me on this BIDDER CONTRACT COMPLIANCE MONITORING REPORT are complete and true to the best of my knowledge and belief, and are made in good faith. I understand that if I knowingly make any misstatements of facts, I am subject to be declared in non-compliance with Section 4a-60, 4a-60a, and related sections of the CONN. GEN. STAT.

(Signature)	(Title)	(Date Signed)	(Telephone)

DRAFT

AIA® Document A101® – 2017

Standard Form of Agreement Between Owner and Contractor
where the basis of payment is a Stipulated Sum

AGREEMENT made as of the « » day of « » in the year « »
(In words, indicate day, month and year.)

BETWEEN the Owner:
(Name, legal status, address and other information)

« »« »
« »
« »
« »

and the Contractor:
(Name, legal status, address and other information)

« »« »
« »
« »
« »

for the following Project:
(Name, location and detailed description)

« »
« »
« »

The Architect:
(Name, legal status, address and other information)

« »« »
« »
« »
« »

The Owner and Contractor agree as follows.

ADDITIONS AND DELETIONS: The author of this document has added information needed for its completion. The author may also have revised the text of the original AIA standard form. An *Additions and Deletions Report* that notes added information as well as revisions to the standard form text is available from the author and should be reviewed.

This document has important legal consequences. Consultation with an attorney is encouraged with respect to its completion or modification.

The parties should complete A101®-2017, Exhibit A, Insurance and Bonds, contemporaneously with this Agreement. AIA Document A201®-2017, General Conditions of the Contract for Construction, is adopted in this document by reference. Do not use with other general conditions unless this document is modified.

ELECTRONIC COPYING of any portion of this AIA® Document to another electronic file is prohibited and constitutes a violation of copyright laws as set forth in the footer of this document.

TABLE OF ARTICLES

ARTICLE 1 THE CONTRACT DOCUMENTS

The Contract Documents consist of this Agreement, Conditions of the Contract (General, Supplementary, and other Conditions), Drawings, Specifications, Addenda issued prior to execution of this Agreement, other documents listed in this Agreement, and Modifications issued after execution of this Agreement, all of which form the Contract, and are as fully a part of the Contract as if attached to this Agreement or repeated herein. The Contract represents the entire and integrated agreement between the parties hereto and supersedes prior negotiations, representations, or agreements, either written or oral. An enumeration of the Contract Documents, other than a Modification, appears in Article 9.

ARTICLE 2 THE WORK OF THIS CONTRACT

The Contractor shall fully execute the Work described in the Contract Documents, except as specifically indicated in the Contract Documents to be the responsibility of others.

ARTICLE 3 DATE OF COMMENCEMENT AND SUBSTANTIAL COMPLETION

§ 3.1 The date of commencement of the Work shall be:
(Check one of the following boxes.)

[« »] The date of this Agreement.

[« »] A date set forth in a notice to proceed issued by the Owner.

[« »] Established as follows:
(Insert a date or a means to determine the date of commencement of the Work.)

« »

If a date of commencement of the Work is not selected, then the date of commencement shall be the date of this Agreement.

§ 3.2 The Contract Time shall be measured from the date of commencement of the Work.

§ 3.3 Substantial Completion

§ 3.3.1 Subject to adjustments of the Contract Time as provided in the Contract Documents, the Contractor shall achieve Substantial Completion of the entire Work:
(Check one of the following boxes and complete the necessary information.)

[« »] Not later than « » (« ») calendar days from the date of commencement of the Work.

[« »] By the following date: « »

§ 3.3.2 Subject to adjustments of the Contract Time as provided in the Contract Documents, if portions of the Work are to be completed prior to Substantial Completion of the entire Work, the Contractor shall achieve Substantial Completion of such portions by the following dates:

Portion of Work	Substantial Completion Date

§ 3.3.3 If the Contractor fails to achieve Substantial Completion as provided in this Section 3.3, liquidated damages, if any, shall be assessed as set forth in Section 4.5.

ARTICLE 4 CONTRACT SUM

§ 4.1 The Owner shall pay the Contractor the Contract Sum in current funds for the Contractor's performance of the Contract. The Contract Sum shall be « » ($ « »), subject to additions and deductions as provided in the Contract Documents.

§ 4.2 Alternates

§ 4.2.1 Alternates, if any, included in the Contract Sum:

Item	Price

§ 4.2.2 Subject to the conditions noted below, the following alternates may be accepted by the Owner following execution of this Agreement. Upon acceptance, the Owner shall issue a Modification to this Agreement.
(Insert below each alternate and the conditions that must be met for the Owner to accept the alternate.)

Item	Price	Conditions for Acceptance

§ 4.3 Allowances, if any, included in the Contract Sum:
(Identify each allowance.)

Item	Price

§ 4.4 Unit prices, if any:
(Identify the item and state the unit price and quantity limitations, if any, to which the unit price will be applicable.)

Item	Units and Limitations	Price per Unit ($0.00)

§ 4.5 Liquidated damages, if any:
(Insert terms and conditions for liquidated damages, if any.)

« »

§ 4.6 Other:
(Insert provisions for bonus or other incentives, if any, that might result in a change to the Contract Sum.)

« »

ARTICLE 5 PAYMENTS

§ 5.1 Progress Payments

§ 5.1.1 Based upon Applications for Payment submitted to the Architect by the Contractor and Certificates for Payment issued by the Architect, the Owner shall make progress payments on account of the Contract Sum to the Contractor as provided below and elsewhere in the Contract Documents.

§ 5.1.2 The period covered by each Application for Payment shall be one calendar month ending on the last day of the month, or as follows:

« »

§ 5.1.3 Provided that an Application for Payment is received by the Architect not later than the « » day of a month, the Owner shall make payment of the amount certified to the Contractor not later than the « » day of the « » month. If an Application for Payment is received by the Architect after the application date fixed above, payment of the amount certified shall be made by the Owner not later than « » (« ») days after the Architect receives the Application for Payment.
(Federal, state or local laws may require payment within a certain period of time.)

§ 5.1.4 Each Application for Payment shall be based on the most recent schedule of values submitted by the Contractor in accordance with the Contract Documents. The schedule of values shall allocate the entire Contract Sum among the various portions of the Work. The schedule of values shall be prepared in such form, and supported by such data to substantiate its accuracy, as the Architect may require. This schedule of values shall be used as a basis for reviewing the Contractor's Applications for Payment.

§ 5.1.5 Applications for Payment shall show the percentage of completion of each portion of the Work as of the end of the period covered by the Application for Payment.

§ 5.1.6 In accordance with AIA Document A201™–2017, General Conditions of the Contract for Construction, and subject to other provisions of the Contract Documents, the amount of each progress payment shall be computed as follows:

§ 5.1.6.1 The amount of each progress payment shall first include:

- **.1** That portion of the Contract Sum properly allocable to completed Work;
- **.2** That portion of the Contract Sum properly allocable to materials and equipment delivered and suitably stored at the site for subsequent incorporation in the completed construction, or, if approved in advance by the Owner, suitably stored off the site at a location agreed upon in writing; and
- **.3** That portion of Construction Change Directives that the Architect determines, in the Architect's professional judgment, to be reasonably justified.

§ 5.1.6.2 The amount of each progress payment shall then be reduced by:

- **.1** The aggregate of any amounts previously paid by the Owner;
- **.2** The amount, if any, for Work that remains uncorrected and for which the Architect has previously withheld a Certificate for Payment as provided in Article 9 of AIA Document A201–2017;
- **.3** Any amount for which the Contractor does not intend to pay a Subcontractor or material supplier, unless the Work has been performed by others the Contractor intends to pay;
- **.4** For Work performed or defects discovered since the last payment application, any amount for which the Architect may withhold payment, or nullify a Certificate of Payment in whole or in part, as provided in Article 9 of AIA Document A201–2017; and
- **.5** Retainage withheld pursuant to Section 5.1.7.

§ 5.1.7 Retainage

§ 5.1.7.1 For each progress payment made prior to Substantial Completion of the Work, the Owner may withhold the following amount, as retainage, from the payment otherwise due:
(Insert a percentage or amount to be withheld as retainage from each Application for Payment. The amount of retainage may be limited by governing law.)

« »

§ 5.1.7.1.1 The following items are not subject to retainage:
(Insert any items not subject to the withholding of retainage, such as general conditions, insurance, etc.)

« »

§ 5.1.7.2 Reduction or limitation of retainage, if any, shall be as follows:
(If the retainage established in Section 5.1.7.1 is to be modified prior to Substantial Completion of the entire Work, including modifications for Substantial Completion of portions of the Work as provided in Section 3.3.2, insert provisions for such modifications.)

« »

§ 5.1.7.3 Except as set forth in this Section 5.1.7.3, upon Substantial Completion of the Work, the Contractor may submit an Application for Payment that includes the retainage withheld from prior Applications for Payment pursuant to this Section 5.1.7. The Application for Payment submitted at Substantial Completion shall not include retainage as follows:
(Insert any other conditions for release of retainage upon Substantial Completion.)

« »

§ 5.1.8 If final completion of the Work is materially delayed through no fault of the Contractor, the Owner shall pay the Contractor any additional amounts in accordance with Article 9 of AIA Document A201–2017.

§ 5.1.9 Except with the Owner's prior approval, the Contractor shall not make advance payments to suppliers for materials or equipment which have not been delivered and stored at the site.

§ 5.2 Final Payment

§ 5.2.1 Final payment, constituting the entire unpaid balance of the Contract Sum, shall be made by the Owner to the Contractor when

- **.1** the Contractor has fully performed the Contract except for the Contractor's responsibility to correct Work as provided in Article 12 of AIA Document A201–2017, and to satisfy other requirements, if any, which extend beyond final payment; and
- **.2** a final Certificate for Payment has been issued by the Architect.

§ 5.2.2 The Owner's final payment to the Contractor shall be made no later than 30 days after the issuance of the Architect's final Certificate for Payment, or as follows:

« »

§ 5.3 Interest

Payments due and unpaid under the Contract shall bear interest from the date payment is due at the rate stated below, or in the absence thereof, at the legal rate prevailing from time to time at the place where the Project is located.
(Insert rate of interest agreed upon, if any.)

« » % « »

ARTICLE 6 DISPUTE RESOLUTION

§ 6.1 Initial Decision Maker

The Architect will serve as the Initial Decision Maker pursuant to Article 15 of AIA Document A201–2017, unless the parties appoint below another individual, not a party to this Agreement, to serve as the Initial Decision Maker.
(If the parties mutually agree, insert the name, address and other contact information of the Initial Decision Maker, if other than the Architect.)

« »
« »
« »
« »

§ 6.2 Binding Dispute Resolution
For any Claim subject to, but not resolved by, mediation pursuant to Article 15 of AIA Document A201–2017, the method of binding dispute resolution shall be as follows:
(Check the appropriate box.)

[« »] Arbitration pursuant to Section 15.4 of AIA Document A201–2017

[« »] Litigation in a court of competent jurisdiction

[« »] Other *(Specify)*

« »

If the Owner and Contractor do not select a method of binding dispute resolution, or do not subsequently agree in writing to a binding dispute resolution method other than litigation, Claims will be resolved by litigation in a court of competent jurisdiction.

ARTICLE 7 TERMINATION OR SUSPENSION

§ 7.1 The Contract may be terminated by the Owner or the Contractor as provided in Article 14 of AIA Document A201–2017.

§ 7.1.1 If the Contract is terminated for the Owner's convenience in accordance with Article 14 of AIA Document A201–2017, then the Owner shall pay the Contractor a termination fee as follows:
(Insert the amount of, or method for determining, the fee, if any, payable to the Contractor following a termination for the Owner's convenience.)

« »

§ 7.2 The Work may be suspended by the Owner as provided in Article 14 of AIA Document A201–2017.

ARTICLE 8 MISCELLANEOUS PROVISIONS

§ 8.1 Where reference is made in this Agreement to a provision of AIA Document A201–2017 or another Contract Document, the reference refers to that provision as amended or supplemented by other provisions of the Contract Documents.

§ 8.2 The Owner's representative:
(Name, address, email address, and other information)

« »
« »
« »
« »
« »
« »

§ 8.3 The Contractor's representative:
(Name, address, email address, and other information)

« »
« »
« »
« »
« »
« »

§ 8.4 Neither the Owner's nor the Contractor's representative shall be changed without ten days' prior notice to the other party.

§ 8.5 Insurance and Bonds

§ 8.5.1 The Owner and the Contractor shall purchase and maintain insurance as set forth in AIA Document A101™–2017, Standard Form of Agreement Between Owner and Contractor where the basis of payment is a Stipulated Sum, Exhibit A, Insurance and Bonds, and elsewhere in the Contract Documents.

§ 8.5.2 The Contractor shall provide bonds as set forth in AIA Document A101™–2017 Exhibit A, and elsewhere in the Contract Documents.

§ 8.6 Notice in electronic format, pursuant to Article 1 of AIA Document A201–2017, may be given in accordance with AIA Document E203™–2013, Building Information Modeling and Digital Data Exhibit, if completed, or as otherwise set forth below:
(If other than in accordance with AIA Document E203–2013, insert requirements for delivering notice in electronic format such as name, title, and email address of the recipient and whether and how the system will be required to generate a read receipt for the transmission.)

« »

§ 8.7 Other provisions:

« »

ARTICLE 9 ENUMERATION OF CONTRACT DOCUMENTS

§ 9.1 This Agreement is comprised of the following documents:

.1 AIA Document A101™–2017, Standard Form of Agreement Between Owner and Contractor

.2 AIA Document A101™–2017, Exhibit A, Insurance and Bonds

.3 AIA Document A201™–2017, General Conditions of the Contract for Construction

.4 AIA Document E203™–2013, Building Information Modeling and Digital Data Exhibit, dated as indicated below:
(Insert the date of the E203-2013 incorporated into this Agreement.)

« »

.5 Drawings

Number	Title	Date

.6 Specifications

Section	Title	Date	Pages

.7 Addenda, if any:

Number	Date	Pages

Portions of Addenda relating to bidding or proposal requirements are not part of the Contract Documents unless the bidding or proposal requirements are also enumerated in this Article 9.

.8 Other Exhibits:
(Check all boxes that apply and include appropriate information identifying the exhibit where required.)

[« »] AIA Document E204™–2017, Sustainable Projects Exhibit, dated as indicated below:
(Insert the date of the E204-2017 incorporated into this Agreement.)

« »

[« »] The Sustainability Plan:

Title	Date	Pages

[« »] Supplementary and other Conditions of the Contract:

Document	Title	Date	Pages

.9 Other documents, if any, listed below:
(List here any additional documents that are intended to form part of the Contract Documents. AIA Document A201™–2017 provides that the advertisement or invitation to bid, Instructions to Bidders, sample forms, the Contractor's bid or proposal, portions of Addenda relating to bidding or proposal requirements, and other information furnished by the Owner in anticipation of receiving bids or proposals, are not part of the Contract Documents unless enumerated in this Agreement. Any such documents should be listed here only if intended to be part of the Contract Documents.)

« »

This Agreement entered into as of the day and year first written above.

OWNER *(Signature)*	**CONTRACTOR** *(Signature)*
« »« »	« »« »
(Printed name and title)	*(Printed name and title)*

DRAFT

AIA® Document A201® – 2017

General Conditions of the Contract for Construction

for the following PROJECT:
(Name and location or address)

« »
« »

THE OWNER:
(Name, legal status and address)

« »« »
« »

THE ARCHITECT:
(Name, legal status and address)

« »« »
« »

TABLE OF ARTICLES

ADDITIONS AND DELETIONS: The author of this document has added information needed for its completion. The author may also have revised the text of the original AIA standard form. An *Additions and Deletions Report* that notes added information as well as revisions to the standard form text is available from the author and should be reviewed.

This document has important legal consequences. Consultation with an attorney is encouraged with respect to its completion or modification.

For guidance in modifying this document to include supplementary conditions, see AIA Document A503™, Guide for Supplementary Conditions.

ELECTRONIC COPYING of any portion of this AIA® Document to another electronic file is prohibited and constitutes a violation of copyright laws as set forth in the footer of this document.

INDEX

(Topics and numbers in bold are Section headings.)

ARTICLE 1 GENERAL PROVISIONS

§ 1.1 Basic Definitions

§ 1.1.1 The Contract Documents

The Contract Documents are enumerated in the Agreement between the Owner and Contractor (hereinafter the Agreement) and consist of the Agreement, Conditions of the Contract (General, Supplementary and other Conditions), Drawings, Specifications, Addenda issued prior to execution of the Contract, other documents listed in the Agreement, and Modifications issued after execution of the Contract. A Modification is (1) a written amendment to the Contract signed by both parties, (2) a Change Order, (3) a Construction Change Directive, or (4) a written order for a minor change in the Work issued by the Architect. Unless specifically enumerated in the Agreement, the Contract Documents do not include the advertisement or invitation to bid, Instructions to Bidders, sample forms, other information furnished by the Owner in anticipation of receiving bids or proposals, the Contractor's bid or proposal, or portions of Addenda relating to bidding or proposal requirements.

§ 1.1.2 The Contract

The Contract Documents form the Contract for Construction. The Contract represents the entire and integrated agreement between the parties hereto and supersedes prior negotiations, representations, or agreements, either written or oral. The Contract may be amended or modified only by a Modification. The Contract Documents shall not be construed to create a contractual relationship of any kind (1) between the Contractor and the Architect or the Architect's consultants, (2) between the Owner and a Subcontractor or a Sub-subcontractor, (3) between the Owner and the Architect or the Architect's consultants, or (4) between any persons or entities other than the Owner and the Contractor. The Architect shall, however, be entitled to performance and enforcement of obligations under the Contract intended to facilitate performance of the Architect's duties.

§ 1.1.3 The Work

The term "Work" means the construction and services required by the Contract Documents, whether completed or partially completed, and includes all other labor, materials, equipment, and services provided or to be provided by the Contractor to fulfill the Contractor's obligations. The Work may constitute the whole or a part of the Project.

§ 1.1.4 The Project

The Project is the total construction of which the Work performed under the Contract Documents may be the whole or a part and which may include construction by the Owner and by Separate Contractors.

§ 1.1.5 The Drawings

The Drawings are the graphic and pictorial portions of the Contract Documents showing the design, location and dimensions of the Work, generally including plans, elevations, sections, details, schedules, and diagrams.

§ 1.1.6 The Specifications

The Specifications are that portion of the Contract Documents consisting of the written requirements for materials, equipment, systems, standards and workmanship for the Work, and performance of related services.

§ 1.1.7 Instruments of Service

Instruments of Service are representations, in any medium of expression now known or later developed, of the tangible and intangible creative work performed by the Architect and the Architect's consultants under their respective professional services agreements. Instruments of Service may include, without limitation, studies, surveys, models, sketches, drawings, specifications, and other similar materials.

§ 1.1.8 Initial Decision Maker

The Initial Decision Maker is the person identified in the Agreement to render initial decisions on Claims in accordance with Section 15.2. The Initial Decision Maker shall not show partiality to the Owner or Contractor and shall not be liable for results of interpretations or decisions rendered in good faith.

§ 1.2 Correlation and Intent of the Contract Documents

§ 1.2.1 The intent of the Contract Documents is to include all items necessary for the proper execution and completion of the Work by the Contractor. The Contract Documents are complementary, and what is required by one shall be as binding as if required by all; performance by the Contractor shall be required only to the extent consistent with the Contract Documents and reasonably inferable from them as being necessary to produce the indicated results.

§ 1.2.1.1 The invalidity of any provision of the Contract Documents shall not invalidate the Contract or its remaining provisions. If it is determined that any provision of the Contract Documents violates any law, or is otherwise invalid or unenforceable, then that provision shall be revised to the extent necessary to make that provision legal and enforceable. In such case the Contract Documents shall be construed, to the fullest extent permitted by law, to give effect to the parties' intentions and purposes in executing the Contract.

§ 1.2.2 Organization of the Specifications into divisions, sections and articles, and arrangement of Drawings shall not control the Contractor in dividing the Work among Subcontractors or in establishing the extent of Work to be performed by any trade.

§ 1.2.3 Unless otherwise stated in the Contract Documents, words that have well-known technical or construction industry meanings are used in the Contract Documents in accordance with such recognized meanings.

§ 1.3 Capitalization

Terms capitalized in these General Conditions include those that are (1) specifically defined, (2) the titles of numbered articles, or (3) the titles of other documents published by the American Institute of Architects.

§ 1.4 Interpretation

In the interest of brevity the Contract Documents frequently omit modifying words such as "all" and "any" and articles such as "the" and "an," but the fact that a modifier or an article is absent from one statement and appears in another is not intended to affect the interpretation of either statement.

§ 1.5 Ownership and Use of Drawings, Specifications, and Other Instruments of Service

§ 1.5.1 The Architect and the Architect's consultants shall be deemed the authors and owners of their respective Instruments of Service, including the Drawings and Specifications, and retain all common law, statutory, and other reserved rights in their Instruments of Service, including copyrights. The Contractor, Subcontractors, Sub-subcontractors, and suppliers shall not own or claim a copyright in the Instruments of Service. Submittal or distribution to meet official regulatory requirements or for other purposes in connection with the Project is not to be construed as publication in derogation of the Architect's or Architect's consultants' reserved rights.

§ 1.5.2 The Contractor, Subcontractors, Sub-subcontractors, and suppliers are authorized to use and reproduce the Instruments of Service provided to them, subject to any protocols established pursuant to Sections 1.7 and 1.8, solely and exclusively for execution of the Work. All copies made under this authorization shall bear the copyright notice, if any, shown on the Instruments of Service. The Contractor, Subcontractors, Sub-subcontractors, and suppliers may not use the Instruments of Service on other projects or for additions to the Project outside the scope of the Work without the specific written consent of the Owner, Architect, and the Architect's consultants.

§ 1.6 Notice

§ 1.6.1 Except as otherwise provided in Section 1.6.2, where the Contract Documents require one party to notify or give notice to the other party, such notice shall be provided in writing to the designated representative of the party to whom the notice is addressed and shall be deemed to have been duly served if delivered in person, by mail, by courier, or by electronic transmission if a method for electronic transmission is set forth in the Agreement.

§ 1.6.2 Notice of Claims as provided in Section 15.1.3 shall be provided in writing and shall be deemed to have been duly served only if delivered to the designated representative of the party to whom the notice is addressed by certified or registered mail, or by courier providing proof of delivery.

§ 1.7 Digital Data Use and Transmission

The parties shall agree upon protocols governing the transmission and use of Instruments of Service or any other information or documentation in digital form. The parties will use AIA Document E203™–2013, Building Information Modeling and Digital Data Exhibit, to establish the protocols for the development, use, transmission, and exchange of digital data.

§ 1.8 Building Information Models Use and Reliance

Any use of, or reliance on, all or a portion of a building information model without agreement to protocols governing the use of, and reliance on, the information contained in the model and without having those protocols set forth in AIA Document E203™–2013, Building Information Modeling and Digital Data Exhibit, and the requisite AIA Document G202™–2013, Project Building Information Modeling Protocol Form, shall be at the using or

relying party's sole risk and without liability to the other party and its contractors or consultants, the authors of, or contributors to, the building information model, and each of their agents and employees.

ARTICLE 2 OWNER

§ 2.1 General

§ 2.1.1 The Owner is the person or entity identified as such in the Agreement and is referred to throughout the Contract Documents as if singular in number. The Owner shall designate in writing a representative who shall have express authority to bind the Owner with respect to all matters requiring the Owner's approval or authorization. Except as otherwise provided in Section 4.2.1, the Architect does not have such authority. The term "Owner" means the Owner or the Owner's authorized representative.

§ 2.1.2 The Owner shall furnish to the Contractor, within fifteen days after receipt of a written request, information necessary and relevant for the Contractor to evaluate, give notice of, or enforce mechanic's lien rights. Such information shall include a correct statement of the record legal title to the property on which the Project is located, usually referred to as the site, and the Owner's interest therein.

§ 2.2 Evidence of the Owner's Financial Arrangements

§ 2.2.1 Prior to commencement of the Work and upon written request by the Contractor, the Owner shall furnish to the Contractor reasonable evidence that the Owner has made financial arrangements to fulfill the Owner's obligations under the Contract. The Contractor shall have no obligation to commence the Work until the Owner provides such evidence. If commencement of the Work is delayed under this Section 2.2.1, the Contract Time shall be extended appropriately.

§ 2.2.2 Following commencement of the Work and upon written request by the Contractor, the Owner shall furnish to the Contractor reasonable evidence that the Owner has made financial arrangements to fulfill the Owner's obligations under the Contract only if (1) the Owner fails to make payments to the Contractor as the Contract Documents require; (2) the Contractor identifies in writing a reasonable concern regarding the Owner's ability to make payment when due; or (3) a change in the Work materially changes the Contract Sum. If the Owner fails to provide such evidence, as required, within fourteen days of the Contractor's request, the Contractor may immediately stop the Work and, in that event, shall notify the Owner that the Work has stopped. However, if the request is made because a change in the Work materially changes the Contract Sum under (3) above, the Contractor may immediately stop only that portion of the Work affected by the change until reasonable evidence is provided. If the Work is stopped under this Section 2.2.2, the Contract Time shall be extended appropriately and the Contract Sum shall be increased by the amount of the Contractor's reasonable costs of shutdown, delay and start-up, plus interest as provided in the Contract Documents.

§ 2.2.3 After the Owner furnishes evidence of financial arrangements under this Section 2.2, the Owner shall not materially vary such financial arrangements without prior notice to the Contractor.

§ 2.2.4 Where the Owner has designated information furnished under this Section 2.2 as "confidential," the Contractor shall keep the information confidential and shall not disclose it to any other person. However, the Contractor may disclose "confidential" information, after seven (7) days' notice to the Owner, where disclosure is required by law, including a subpoena or other form of compulsory legal process issued by a court or governmental entity, or by court or arbitrator(s) order. The Contractor may also disclose "confidential" information to its employees, consultants, sureties, Subcontractors and their employees, Sub-subcontractors, and others who need to know the content of such information solely and exclusively for the Project and who agree to maintain the confidentiality of such information.

§ 2.3 Information and Services Required of the Owner

§ 2.3.1 Except for permits and fees that are the responsibility of the Contractor under the Contract Documents, including those required under Section 3.7.1, the Owner shall secure and pay for necessary approvals, easements, assessments and charges required for construction, use or occupancy of permanent structures or for permanent changes in existing facilities.

§ 2.3.2 The Owner shall retain an architect lawfully licensed to practice architecture, or an entity lawfully practicing architecture, in the jurisdiction where the Project is located. That person or entity is identified as the Architect in the Agreement and is referred to throughout the Contract Documents as if singular in number.

§ 2.3.3 If the employment of the Architect terminates, the Owner shall employ a successor to whom the Contractor has no reasonable objection and whose status under the Contract Documents shall be that of the Architect.

§ 2.3.4 The Owner shall furnish surveys describing physical characteristics, legal limitations and utility locations for the site of the Project, and a legal description of the site. The Contractor shall be entitled to rely on the accuracy of information furnished by the Owner but shall exercise proper precautions relating to the safe performance of the Work.

§ 2.3.5 The Owner shall furnish information or services required of the Owner by the Contract Documents with reasonable promptness. The Owner shall also furnish any other information or services under the Owner's control and relevant to the Contractor's performance of the Work with reasonable promptness after receiving the Contractor's written request for such information or services.

§ 2.3.6 Unless otherwise provided in the Contract Documents, the Owner shall furnish to the Contractor one copy of the Contract Documents for purposes of making reproductions pursuant to Section 1.5.2.

§ 2.4 Owner's Right to Stop the Work

If the Contractor fails to correct Work that is not in accordance with the requirements of the Contract Documents as required by Section 12.2 or repeatedly fails to carry out Work in accordance with the Contract Documents, the Owner may issue a written order to the Contractor to stop the Work, or any portion thereof, until the cause for such order has been eliminated; however, the right of the Owner to stop the Work shall not give rise to a duty on the part of the Owner to exercise this right for the benefit of the Contractor or any other person or entity, except to the extent required by Section 6.1.3.

§ 2.5 Owner's Right to Carry Out the Work

If the Contractor defaults or neglects to carry out the Work in accordance with the Contract Documents and fails within a ten-day period after receipt of notice from the Owner to commence and continue correction of such default or neglect with diligence and promptness, the Owner may, without prejudice to other remedies the Owner may have, correct such default or neglect. Such action by the Owner and amounts charged to the Contractor are both subject to prior approval of the Architect and the Architect may, pursuant to Section 9.5.1, withhold or nullify a Certificate for Payment in whole or in part, to the extent reasonably necessary to reimburse the Owner for the reasonable cost of correcting such deficiencies, including Owner's expenses and compensation for the Architect's additional services made necessary by such default, neglect, or failure. If current and future payments are not sufficient to cover such amounts, the Contractor shall pay the difference to the Owner. If the Contractor disagrees with the actions of the Owner or the Architect, or the amounts claimed as costs to the Owner, the Contractor may file a Claim pursuant to Article 15.

ARTICLE 3 CONTRACTOR

§ 3.1 General

§ 3.1.1 The Contractor is the person or entity identified as such in the Agreement and is referred to throughout the Contract Documents as if singular in number. The Contractor shall be lawfully licensed, if required in the jurisdiction where the Project is located. The Contractor shall designate in writing a representative who shall have express authority to bind the Contractor with respect to all matters under this Contract. The term "Contractor" means the Contractor or the Contractor's authorized representative.

§ 3.1.2 The Contractor shall perform the Work in accordance with the Contract Documents.

§ 3.1.3 The Contractor shall not be relieved of its obligations to perform the Work in accordance with the Contract Documents either by activities or duties of the Architect in the Architect's administration of the Contract, or by tests, inspections or approvals required or performed by persons or entities other than the Contractor.

§ 3.2 Review of Contract Documents and Field Conditions by Contractor

§ 3.2.1 Execution of the Contract by the Contractor is a representation that the Contractor has visited the site, become generally familiar with local conditions under which the Work is to be performed, and correlated personal observations with requirements of the Contract Documents.

§ 3.2.2 Because the Contract Documents are complementary, the Contractor shall, before starting each portion of the Work, carefully study and compare the various Contract Documents relative to that portion of the Work, as well as

the information furnished by the Owner pursuant to Section 2.3.4, shall take field measurements of any existing conditions related to that portion of the Work, and shall observe any conditions at the site affecting it. These obligations are for the purpose of facilitating coordination and construction by the Contractor and are not for the purpose of discovering errors, omissions, or inconsistencies in the Contract Documents; however, the Contractor shall promptly report to the Architect any errors, inconsistencies or omissions discovered by or made known to the Contractor as a request for information in such form as the Architect may require. It is recognized that the Contractor's review is made in the Contractor's capacity as a contractor and not as a licensed design professional, unless otherwise specifically provided in the Contract Documents.

§ 3.2.3 The Contractor is not required to ascertain that the Contract Documents are in accordance with applicable laws, statutes, ordinances, codes, rules and regulations, or lawful orders of public authorities, but the Contractor shall promptly report to the Architect any nonconformity discovered by or made known to the Contractor as a request for information in such form as the Architect may require.

§ 3.2.4 If the Contractor believes that additional cost or time is involved because of clarifications or instructions the Architect issues in response to the Contractor's notices or requests for information pursuant to Sections 3.2.2 or 3.2.3, the Contractor shall submit Claims as provided in Article 15. If the Contractor fails to perform the obligations of Sections 3.2.2 or 3.2.3, the Contractor shall pay such costs and damages to the Owner, subject to Section 15.1.7, as would have been avoided if the Contractor had performed such obligations. If the Contractor performs those obligations, the Contractor shall not be liable to the Owner or Architect for damages resulting from errors, inconsistencies or omissions in the Contract Documents, for differences between field measurements or conditions and the Contract Documents, or for nonconformities of the Contract Documents to applicable laws, statutes, ordinances, codes, rules and regulations, and lawful orders of public authorities.

§ 3.3 Supervision and Construction Procedures

§ 3.3.1 The Contractor shall supervise and direct the Work, using the Contractor's best skill and attention. The Contractor shall be solely responsible for, and have control over, construction means, methods, techniques, sequences, and procedures, and for coordinating all portions of the Work under the Contract. If the Contract Documents give specific instructions concerning construction means, methods, techniques, sequences, or procedures, the Contractor shall evaluate the jobsite safety thereof and shall be solely responsible for the jobsite safety of such means, methods, techniques, sequences, or procedures. If the Contractor determines that such means, methods, techniques, sequences or procedures may not be safe, the Contractor shall give timely notice to the Owner and Architect, and shall propose alternative means, methods, techniques, sequences, or procedures. The Architect shall evaluate the proposed alternative solely for conformance with the design intent for the completed construction. Unless the Architect objects to the Contractor's proposed alternative, the Contractor shall perform the Work using its alternative means, methods, techniques, sequences, or procedures.

§ 3.3.2 The Contractor shall be responsible to the Owner for acts and omissions of the Contractor's employees, Subcontractors and their agents and employees, and other persons or entities performing portions of the Work for, or on behalf of, the Contractor or any of its Subcontractors.

§ 3.3.3 The Contractor shall be responsible for inspection of portions of Work already performed to determine that such portions are in proper condition to receive subsequent Work.

§ 3.4 Labor and Materials

§ 3.4.1 Unless otherwise provided in the Contract Documents, the Contractor shall provide and pay for labor, materials, equipment, tools, construction equipment and machinery, water, heat, utilities, transportation, and other facilities and services necessary for proper execution and completion of the Work, whether temporary or permanent and whether or not incorporated or to be incorporated in the Work.

§ 3.4.2 Except in the case of minor changes in the Work approved by the Architect in accordance with Section 3.12.8 or ordered by the Architect in accordance with Section 7.4, the Contractor may make substitutions only with the consent of the Owner, after evaluation by the Architect and in accordance with a Change Order or Construction Change Directive.

§ 3.4.3 The Contractor shall enforce strict discipline and good order among the Contractor's employees and other persons carrying out the Work. The Contractor shall not permit employment of unfit persons or persons not properly skilled in tasks assigned to them.

§ 3.5 Warranty

§ 3.5.1 The Contractor warrants to the Owner and Architect that materials and equipment furnished under the Contract will be of good quality and new unless the Contract Documents require or permit otherwise. The Contractor further warrants that the Work will conform to the requirements of the Contract Documents and will be free from defects, except for those inherent in the quality of the Work the Contract Documents require or permit. Work, materials, or equipment not conforming to these requirements may be considered defective. The Contractor's warranty excludes remedy for damage or defect caused by abuse, alterations to the Work not executed by the Contractor, improper or insufficient maintenance, improper operation, or normal wear and tear and normal usage. If required by the Architect, the Contractor shall furnish satisfactory evidence as to the kind and quality of materials and equipment.

§ 3.5.2 All material, equipment, or other special warranties required by the Contract Documents shall be issued in the name of the Owner, or shall be transferable to the Owner, and shall commence in accordance with Section 9.8.4.

§ 3.6 Taxes

The Contractor shall pay sales, consumer, use and similar taxes for the Work provided by the Contractor that are legally enacted when bids are received or negotiations concluded, whether or not yet effective or merely scheduled to go into effect.

§ 3.7 Permits, Fees, Notices and Compliance with Laws

§ 3.7.1 Unless otherwise provided in the Contract Documents, the Contractor shall secure and pay for the building permit as well as for other permits, fees, licenses, and inspections by government agencies necessary for proper execution and completion of the Work that are customarily secured after execution of the Contract and legally required at the time bids are received or negotiations concluded.

§ 3.7.2 The Contractor shall comply with and give notices required by applicable laws, statutes, ordinances, codes, rules and regulations, and lawful orders of public authorities applicable to performance of the Work.

§ 3.7.3 If the Contractor performs Work knowing it to be contrary to applicable laws, statutes, ordinances, codes, rules and regulations, or lawful orders of public authorities, the Contractor shall assume appropriate responsibility for such Work and shall bear the costs attributable to correction.

§ 3.7.4 Concealed or Unknown Conditions

If the Contractor encounters conditions at the site that are (1) subsurface or otherwise concealed physical conditions that differ materially from those indicated in the Contract Documents or (2) unknown physical conditions of an unusual nature that differ materially from those ordinarily found to exist and generally recognized as inherent in construction activities of the character provided for in the Contract Documents, the Contractor shall promptly provide notice to the Owner and the Architect before conditions are disturbed and in no event later than 14 days after first observance of the conditions. The Architect will promptly investigate such conditions and, if the Architect determines that they differ materially and cause an increase or decrease in the Contractor's cost of, or time required for, performance of any part of the Work, will recommend that an equitable adjustment be made in the Contract Sum or Contract Time, or both. If the Architect determines that the conditions at the site are not materially different from those indicated in the Contract Documents and that no change in the terms of the Contract is justified, the Architect shall promptly notify the Owner and Contractor, stating the reasons. If either party disputes the Architect's determination or recommendation, that party may submit a Claim as provided in Article 15.

§ 3.7.5 If, in the course of the Work, the Contractor encounters human remains or recognizes the existence of burial markers, archaeological sites or wetlands not indicated in the Contract Documents, the Contractor shall immediately suspend any operations that would affect them and shall notify the Owner and Architect. Upon receipt of such notice, the Owner shall promptly take any action necessary to obtain governmental authorization required to resume the operations. The Contractor shall continue to suspend such operations until otherwise instructed by the Owner but shall continue with all other operations that do not affect those remains or features. Requests for adjustments in the Contract Sum and Contract Time arising from the existence of such remains or features may be made as provided in Article 15.

§ 3.8 Allowances

§ 3.8.1 The Contractor shall include in the Contract Sum all allowances stated in the Contract Documents. Items covered by allowances shall be supplied for such amounts and by such persons or entities as the Owner may direct, but the Contractor shall not be required to employ persons or entities to whom the Contractor has reasonable objection.

§ 3.8.2 Unless otherwise provided in the Contract Documents,

- **.1** allowances shall cover the cost to the Contractor of materials and equipment delivered at the site and all required taxes, less applicable trade discounts;
- **.2** Contractor's costs for unloading and handling at the site, labor, installation costs, overhead, profit, and other expenses contemplated for stated allowance amounts shall be included in the Contract Sum but not in the allowances; and
- **.3** whenever costs are more than or less than allowances, the Contract Sum shall be adjusted accordingly by Change Order. The amount of the Change Order shall reflect (1) the difference between actual costs and the allowances under Section 3.8.2.1 and (2) changes in Contractor's costs under Section 3.8.2.2.

§ 3.8.3 Materials and equipment under an allowance shall be selected by the Owner with reasonable promptness.

§ 3.9 Superintendent

§ 3.9.1 The Contractor shall employ a competent superintendent and necessary assistants who shall be in attendance at the Project site during performance of the Work. The superintendent shall represent the Contractor, and communications given to the superintendent shall be as binding as if given to the Contractor.

§ 3.9.2 The Contractor, as soon as practicable after award of the Contract, shall notify the Owner and Architect of the name and qualifications of a proposed superintendent. Within 14 days of receipt of the information, the Architect may notify the Contractor, stating whether the Owner or the Architect (1) has reasonable objection to the proposed superintendent or (2) requires additional time for review. Failure of the Architect to provide notice within the 14-day period shall constitute notice of no reasonable objection.

§ 3.9.3 The Contractor shall not employ a proposed superintendent to whom the Owner or Architect has made reasonable and timely objection. The Contractor shall not change the superintendent without the Owner's consent, which shall not unreasonably be withheld or delayed.

§ 3.10 Contractor's Construction and Submittal Schedules

§ 3.10.1 The Contractor, promptly after being awarded the Contract, shall submit for the Owner's and Architect's information a Contractor's construction schedule for the Work. The schedule shall contain detail appropriate for the Project, including (1) the date of commencement of the Work, interim schedule milestone dates, and the date of Substantial Completion; (2) an apportionment of the Work by construction activity; and (3) the time required for completion of each portion of the Work. The schedule shall provide for the orderly progression of the Work to completion and shall not exceed time limits current under the Contract Documents. The schedule shall be revised at appropriate intervals as required by the conditions of the Work and Project.

§ 3.10.2 The Contractor, promptly after being awarded the Contract and thereafter as necessary to maintain a current submittal schedule, shall submit a submittal schedule for the Architect's approval. The Architect's approval shall not be unreasonably delayed or withheld. The submittal schedule shall (1) be coordinated with the Contractor's construction schedule, and (2) allow the Architect reasonable time to review submittals. If the Contractor fails to submit a submittal schedule, or fails to provide submittals in accordance with the approved submittal schedule, the Contractor shall not be entitled to any increase in Contract Sum or extension of Contract Time based on the time required for review of submittals.

§ 3.10.3 The Contractor shall perform the Work in general accordance with the most recent schedules submitted to the Owner and Architect.

§ 3.11 Documents and Samples at the Site

The Contractor shall make available, at the Project site, the Contract Documents, including Change Orders, Construction Change Directives, and other Modifications, in good order and marked currently to indicate field changes and selections made during construction, and the approved Shop Drawings, Product Data, Samples, and

similar required submittals. These shall be in electronic form or paper copy, available to the Architect and Owner, and delivered to the Architect for submittal to the Owner upon completion of the Work as a record of the Work as constructed.

§ 3.12 Shop Drawings, Product Data and Samples

§ 3.12.1 Shop Drawings are drawings, diagrams, schedules, and other data specially prepared for the Work by the Contractor or a Subcontractor, Sub-subcontractor, manufacturer, supplier, or distributor to illustrate some portion of the Work.

§ 3.12.2 Product Data are illustrations, standard schedules, performance charts, instructions, brochures, diagrams, and other information furnished by the Contractor to illustrate materials or equipment for some portion of the Work.

§ 3.12.3 Samples are physical examples that illustrate materials, equipment, or workmanship, and establish standards by which the Work will be judged.

§ 3.12.4 Shop Drawings, Product Data, Samples, and similar submittals are not Contract Documents. Their purpose is to demonstrate how the Contractor proposes to conform to the information given and the design concept expressed in the Contract Documents for those portions of the Work for which the Contract Documents require submittals. Review by the Architect is subject to the limitations of Section 4.2.7. Informational submittals upon which the Architect is not expected to take responsive action may be so identified in the Contract Documents. Submittals that are not required by the Contract Documents may be returned by the Architect without action.

§ 3.12.5 The Contractor shall review for compliance with the Contract Documents, approve, and submit to the Architect, Shop Drawings, Product Data, Samples, and similar submittals required by the Contract Documents, in accordance with the submittal schedule approved by the Architect or, in the absence of an approved submittal schedule, with reasonable promptness and in such sequence as to cause no delay in the Work or in the activities of the Owner or of Separate Contractors.

§ 3.12.6 By submitting Shop Drawings, Product Data, Samples, and similar submittals, the Contractor represents to the Owner and Architect that the Contractor has (1) reviewed and approved them, (2) determined and verified materials, field measurements and field construction criteria related thereto, or will do so, and (3) checked and coordinated the information contained within such submittals with the requirements of the Work and of the Contract Documents.

§ 3.12.7 The Contractor shall perform no portion of the Work for which the Contract Documents require submittal and review of Shop Drawings, Product Data, Samples, or similar submittals, until the respective submittal has been approved by the Architect.

§ 3.12.8 The Work shall be in accordance with approved submittals except that the Contractor shall not be relieved of responsibility for deviations from the requirements of the Contract Documents by the Architect's approval of Shop Drawings, Product Data, Samples, or similar submittals, unless the Contractor has specifically notified the Architect of such deviation at the time of submittal and (1) the Architect has given written approval to the specific deviation as a minor change in the Work, or (2) a Change Order or Construction Change Directive has been issued authorizing the deviation. The Contractor shall not be relieved of responsibility for errors or omissions in Shop Drawings, Product Data, Samples, or similar submittals, by the Architect's approval thereof.

§ 3.12.9 The Contractor shall direct specific attention, in writing or on resubmitted Shop Drawings, Product Data, Samples, or similar submittals, to revisions other than those requested by the Architect on previous submittals. In the absence of such notice, the Architect's approval of a resubmission shall not apply to such revisions.

§ 3.12.10 The Contractor shall not be required to provide professional services that constitute the practice of architecture or engineering unless such services are specifically required by the Contract Documents for a portion of the Work or unless the Contractor needs to provide such services in order to carry out the Contractor's responsibilities for construction means, methods, techniques, sequences, and procedures. The Contractor shall not be required to provide professional services in violation of applicable law.

§ 3.12.10.1 If professional design services or certifications by a design professional related to systems, materials, or equipment are specifically required of the Contractor by the Contract Documents, the Owner and the Architect will

specify all performance and design criteria that such services must satisfy. The Contractor shall be entitled to rely upon the adequacy and accuracy of the performance and design criteria provided in the Contract Documents. The Contractor shall cause such services or certifications to be provided by an appropriately licensed design professional, whose signature and seal shall appear on all drawings, calculations, specifications, certifications, Shop Drawings, and other submittals prepared by such professional. Shop Drawings, and other submittals related to the Work, designed or certified by such professional, if prepared by others, shall bear such professional's written approval when submitted to the Architect. The Owner and the Architect shall be entitled to rely upon the adequacy and accuracy of the services, certifications, and approvals performed or provided by such design professionals, provided the Owner and Architect have specified to the Contractor the performance and design criteria that such services must satisfy. Pursuant to this Section 3.12.10, the Architect will review and approve or take other appropriate action on submittals only for the limited purpose of checking for conformance with information given and the design concept expressed in the Contract Documents.

§ 3.12.10.2 If the Contract Documents require the Contractor's design professional to certify that the Work has been performed in accordance with the design criteria, the Contractor shall furnish such certifications to the Architect at the time and in the form specified by the Architect.

§ 3.13 Use of Site

The Contractor shall confine operations at the site to areas permitted by applicable laws, statutes, ordinances, codes, rules and regulations, lawful orders of public authorities, and the Contract Documents and shall not unreasonably encumber the site with materials or equipment.

§ 3.14 Cutting and Patching

§ 3.14.1 The Contractor shall be responsible for cutting, fitting, or patching required to complete the Work or to make its parts fit together properly. All areas requiring cutting, fitting, or patching shall be restored to the condition existing prior to the cutting, fitting, or patching, unless otherwise required by the Contract Documents.

§ 3.14.2 The Contractor shall not damage or endanger a portion of the Work or fully or partially completed construction of the Owner or Separate Contractors by cutting, patching, or otherwise altering such construction, or by excavation. The Contractor shall not cut or otherwise alter construction by the Owner or a Separate Contractor except with written consent of the Owner and of the Separate Contractor. Consent shall not be unreasonably withheld. The Contractor shall not unreasonably withhold, from the Owner or a Separate Contractor, its consent to cutting or otherwise altering the Work.

§ 3.15 Cleaning Up

§ 3.15.1 The Contractor shall keep the premises and surrounding area free from accumulation of waste materials and rubbish caused by operations under the Contract. At completion of the Work, the Contractor shall remove waste materials, rubbish, the Contractor's tools, construction equipment, machinery, and surplus materials from and about the Project.

§ 3.15.2 If the Contractor fails to clean up as provided in the Contract Documents, the Owner may do so and the Owner shall be entitled to reimbursement from the Contractor.

§ 3.16 Access to Work

The Contractor shall provide the Owner and Architect with access to the Work in preparation and progress wherever located.

§ 3.17 Royalties, Patents and Copyrights

The Contractor shall pay all royalties and license fees. The Contractor shall defend suits or claims for infringement of copyrights and patent rights and shall hold the Owner and Architect harmless from loss on account thereof, but shall not be responsible for defense or loss when a particular design, process, or product of a particular manufacturer or manufacturers is required by the Contract Documents, or where the copyright violations are contained in Drawings, Specifications, or other documents prepared by the Owner or Architect. However, if an infringement of a copyright or patent is discovered by, or made known to, the Contractor, the Contractor shall be responsible for the loss unless the information is promptly furnished to the Architect.

§ 3.18 Indemnification

§ 3.18.1 To the fullest extent permitted by law, the Contractor shall indemnify and hold harmless the Owner, Architect, Architect's consultants, and agents and employees of any of them from and against claims, damages, losses, and expenses, including but not limited to attorneys' fees, arising out of or resulting from performance of the Work, provided that such claim, damage, loss, or expense is attributable to bodily injury, sickness, disease or death, or to injury to or destruction of tangible property (other than the Work itself), but only to the extent caused by the negligent acts or omissions of the Contractor, a Subcontractor, anyone directly or indirectly employed by them, or anyone for whose acts they may be liable, regardless of whether or not such claim, damage, loss, or expense is caused in part by a party indemnified hereunder. Such obligation shall not be construed to negate, abridge, or reduce other rights or obligations of indemnity that would otherwise exist as to a party or person described in this Section 3.18.

§ 3.18.2 In claims against any person or entity indemnified under this Section 3.18 by an employee of the Contractor, a Subcontractor, anyone directly or indirectly employed by them, or anyone for whose acts they may be liable, the indemnification obligation under Section 3.18.1 shall not be limited by a limitation on amount or type of damages, compensation, or benefits payable by or for the Contractor or a Subcontractor under workers' compensation acts, disability benefit acts, or other employee benefit acts.

ARTICLE 4 ARCHITECT

§ 4.1 General

§ 4.1.1 The Architect is the person or entity retained by the Owner pursuant to Section 2.3.2 and identified as such in the Agreement.

§ 4.1.2 Duties, responsibilities, and limitations of authority of the Architect as set forth in the Contract Documents shall not be restricted, modified, or extended without written consent of the Owner, Contractor, and Architect. Consent shall not be unreasonably withheld.

§ 4.2 Administration of the Contract

§ 4.2.1 The Architect will provide administration of the Contract as described in the Contract Documents and will be an Owner's representative during construction until the date the Architect issues the final Certificate for Payment. The Architect will have authority to act on behalf of the Owner only to the extent provided in the Contract Documents.

§ 4.2.2 The Architect will visit the site at intervals appropriate to the stage of construction, or as otherwise agreed with the Owner, to become generally familiar with the progress and quality of the portion of the Work completed, and to determine in general if the Work observed is being performed in a manner indicating that the Work, when fully completed, will be in accordance with the Contract Documents. However, the Architect will not be required to make exhaustive or continuous on-site inspections to check the quality or quantity of the Work. The Architect will not have control over, charge of, or responsibility for the construction means, methods, techniques, sequences or procedures, or for the safety precautions and programs in connection with the Work, since these are solely the Contractor's rights and responsibilities under the Contract Documents.

§ 4.2.3 On the basis of the site visits, the Architect will keep the Owner reasonably informed about the progress and quality of the portion of the Work completed, and promptly report to the Owner (1) known deviations from the Contract Documents, (2) known deviations from the most recent construction schedule submitted by the Contractor, and (3) defects and deficiencies observed in the Work. The Architect will not be responsible for the Contractor's failure to perform the Work in accordance with the requirements of the Contract Documents. The Architect will not have control over or charge of, and will not be responsible for acts or omissions of, the Contractor, Subcontractors, or their agents or employees, or any other persons or entities performing portions of the Work.

§ 4.2.4 Communications

The Owner and Contractor shall include the Architect in all communications that relate to or affect the Architect's services or professional responsibilities. The Owner shall promptly notify the Architect of the substance of any direct communications between the Owner and the Contractor otherwise relating to the Project. Communications by and with the Architect's consultants shall be through the Architect. Communications by and with Subcontractors and suppliers shall be through the Contractor. Communications by and with Separate Contractors shall be through the Owner. The Contract Documents may specify other communication protocols.

§ 4.2.5 Based on the Architect's evaluations of the Contractor's Applications for Payment, the Architect will review and certify the amounts due the Contractor and will issue Certificates for Payment in such amounts.

§ 4.2.6 The Architect has authority to reject Work that does not conform to the Contract Documents. Whenever the Architect considers it necessary or advisable, the Architect will have authority to require inspection or testing of the Work in accordance with Sections 13.4.2 and 13.4.3, whether or not the Work is fabricated, installed or completed. However, neither this authority of the Architect nor a decision made in good faith either to exercise or not to exercise such authority shall give rise to a duty or responsibility of the Architect to the Contractor, Subcontractors, suppliers, their agents or employees, or other persons or entities performing portions of the Work.

§ 4.2.7 The Architect will review and approve, or take other appropriate action upon, the Contractor's submittals such as Shop Drawings, Product Data, and Samples, but only for the limited purpose of checking for conformance with information given and the design concept expressed in the Contract Documents. The Architect's action will be taken in accordance with the submittal schedule approved by the Architect or, in the absence of an approved submittal schedule, with reasonable promptness while allowing sufficient time in the Architect's professional judgment to permit adequate review. Review of such submittals is not conducted for the purpose of determining the accuracy and completeness of other details such as dimensions and quantities, or for substantiating instructions for installation or performance of equipment or systems, all of which remain the responsibility of the Contractor as required by the Contract Documents. The Architect's review of the Contractor's submittals shall not relieve the Contractor of the obligations under Sections 3.3, 3.5, and 3.12. The Architect's review shall not constitute approval of safety precautions or of any construction means, methods, techniques, sequences, or procedures. The Architect's approval of a specific item shall not indicate approval of an assembly of which the item is a component.

§ 4.2.8 The Architect will prepare Change Orders and Construction Change Directives, and may order minor changes in the Work as provided in Section 7.4. The Architect will investigate and make determinations and recommendations regarding concealed and unknown conditions as provided in Section 3.7.4.

§ 4.2.9 The Architect will conduct inspections to determine the date or dates of Substantial Completion and the date of final completion; issue Certificates of Substantial Completion pursuant to Section 9.8; receive and forward to the Owner, for the Owner's review and records, written warranties and related documents required by the Contract and assembled by the Contractor pursuant to Section 9.10; and issue a final Certificate for Payment pursuant to Section 9.10.

§ 4.2.10 If the Owner and Architect agree, the Architect will provide one or more Project representatives to assist in carrying out the Architect's responsibilities at the site. The Owner shall notify the Contractor of any change in the duties, responsibilities and limitations of authority of the Project representatives.

§ 4.2.11 The Architect will interpret and decide matters concerning performance under, and requirements of, the Contract Documents on written request of either the Owner or Contractor. The Architect's response to such requests will be made in writing within any time limits agreed upon or otherwise with reasonable promptness.

§ 4.2.12 Interpretations and decisions of the Architect will be consistent with the intent of, and reasonably inferable from, the Contract Documents and will be in writing or in the form of drawings. When making such interpretations and decisions, the Architect will endeavor to secure faithful performance by both Owner and Contractor, will not show partiality to either, and will not be liable for results of interpretations or decisions rendered in good faith.

§ 4.2.13 The Architect's decisions on matters relating to aesthetic effect will be final if consistent with the intent expressed in the Contract Documents.

§ 4.2.14 The Architect will review and respond to requests for information about the Contract Documents. The Architect's response to such requests will be made in writing within any time limits agreed upon or otherwise with reasonable promptness. If appropriate, the Architect will prepare and issue supplemental Drawings and Specifications in response to the requests for information.

ARTICLE 5 SUBCONTRACTORS

§ 5.1 Definitions

§ 5.1.1 A Subcontractor is a person or entity who has a direct contract with the Contractor to perform a portion of the Work at the site. The term "Subcontractor" is referred to throughout the Contract Documents as if singular in

number and means a Subcontractor or an authorized representative of the Subcontractor. The term "Subcontractor" does not include a Separate Contractor or the subcontractors of a Separate Contractor.

§ 5.1.2 A Sub-subcontractor is a person or entity who has a direct or indirect contract with a Subcontractor to perform a portion of the Work at the site. The term "Sub-subcontractor" is referred to throughout the Contract Documents as if singular in number and means a Sub-subcontractor or an authorized representative of the Sub-subcontractor.

§ 5.2 Award of Subcontracts and Other Contracts for Portions of the Work

§ 5.2.1 Unless otherwise stated in the Contract Documents, the Contractor, as soon as practicable after award of the Contract, shall notify the Owner and Architect of the persons or entities proposed for each principal portion of the Work, including those who are to furnish materials or equipment fabricated to a special design. Within 14 days of receipt of the information, the Architect may notify the Contractor whether the Owner or the Architect (1) has reasonable objection to any such proposed person or entity or (2) requires additional time for review. Failure of the Architect to provide notice within the 14-day period shall constitute notice of no reasonable objection.

§ 5.2.2 The Contractor shall not contract with a proposed person or entity to whom the Owner or Architect has made reasonable and timely objection. The Contractor shall not be required to contract with anyone to whom the Contractor has made reasonable objection.

§ 5.2.3 If the Owner or Architect has reasonable objection to a person or entity proposed by the Contractor, the Contractor shall propose another to whom the Owner or Architect has no reasonable objection. If the proposed but rejected Subcontractor was reasonably capable of performing the Work, the Contract Sum and Contract Time shall be increased or decreased by the difference, if any, occasioned by such change, and an appropriate Change Order shall be issued before commencement of the substitute Subcontractor's Work. However, no increase in the Contract Sum or Contract Time shall be allowed for such change unless the Contractor has acted promptly and responsively in submitting names as required.

§ 5.2.4 The Contractor shall not substitute a Subcontractor, person, or entity for one previously selected if the Owner or Architect makes reasonable objection to such substitution.

§ 5.3 Subcontractual Relations

By appropriate written agreement, the Contractor shall require each Subcontractor, to the extent of the Work to be performed by the Subcontractor, to be bound to the Contractor by terms of the Contract Documents, and to assume toward the Contractor all the obligations and responsibilities, including the responsibility for safety of the Subcontractor's Work that the Contractor, by these Contract Documents, assumes toward the Owner and Architect. Each subcontract agreement shall preserve and protect the rights of the Owner and Architect under the Contract Documents with respect to the Work to be performed by the Subcontractor so that subcontracting thereof will not prejudice such rights, and shall allow to the Subcontractor, unless specifically provided otherwise in the subcontract agreement, the benefit of all rights, remedies, and redress against the Contractor that the Contractor, by the Contract Documents, has against the Owner. Where appropriate, the Contractor shall require each Subcontractor to enter into similar agreements with Sub-subcontractors. The Contractor shall make available to each proposed Subcontractor, prior to the execution of the subcontract agreement, copies of the Contract Documents to which the Subcontractor will be bound, and, upon written request of the Subcontractor, identify to the Subcontractor terms and conditions of the proposed subcontract agreement that may be at variance with the Contract Documents. Subcontractors will similarly make copies of applicable portions of such documents available to their respective proposed Sub-subcontractors.

§ 5.4 Contingent Assignment of Subcontracts

§ 5.4.1 Each subcontract agreement for a portion of the Work is assigned by the Contractor to the Owner, provided that

- **.1** assignment is effective only after termination of the Contract by the Owner for cause pursuant to Section 14.2 and only for those subcontract agreements that the Owner accepts by notifying the Subcontractor and Contractor; and
- **.2** assignment is subject to the prior rights of the surety, if any, obligated under bond relating to the Contract.

When the Owner accepts the assignment of a subcontract agreement, the Owner assumes the Contractor's rights and obligations under the subcontract.

§ 5.4.2 Upon such assignment, if the Work has been suspended for more than 30 days, the Subcontractor's compensation shall be equitably adjusted for increases in cost resulting from the suspension.

§ 5.4.3 Upon assignment to the Owner under this Section 5.4, the Owner may further assign the subcontract to a successor contractor or other entity. If the Owner assigns the subcontract to a successor contractor or other entity, the Owner shall nevertheless remain legally responsible for all of the successor contractor's obligations under the subcontract.

ARTICLE 6 CONSTRUCTION BY OWNER OR BY SEPARATE CONTRACTORS

§ 6.1 Owner's Right to Perform Construction and to Award Separate Contracts

§ 6.1.1 The term "Separate Contractor(s)" shall mean other contractors retained by the Owner under separate agreements. The Owner reserves the right to perform construction or operations related to the Project with the Owner's own forces, and with Separate Contractors retained under Conditions of the Contract substantially similar to those of this Contract, including those provisions of the Conditions of the Contract related to insurance and waiver of subrogation.

§ 6.1.2 When separate contracts are awarded for different portions of the Project or other construction or operations on the site, the term "Contractor" in the Contract Documents in each case shall mean the Contractor who executes each separate Owner-Contractor Agreement.

§ 6.1.3 The Owner shall provide for coordination of the activities of the Owner's own forces and of each Separate Contractor with the Work of the Contractor, who shall cooperate with them. The Contractor shall participate with any Separate Contractors and the Owner in reviewing their construction schedules. The Contractor shall make any revisions to its construction schedule deemed necessary after a joint review and mutual agreement. The construction schedules shall then constitute the schedules to be used by the Contractor, Separate Contractors, and the Owner until subsequently revised.

§ 6.1.4 Unless otherwise provided in the Contract Documents, when the Owner performs construction or operations related to the Project with the Owner's own forces or with Separate Contractors, the Owner or its Separate Contractors shall have the same obligations and rights that the Contractor has under the Conditions of the Contract, including, without excluding others, those stated in Article 3, this Article 6, and Articles 10, 11, and 12.

§ 6.2 Mutual Responsibility

§ 6.2.1 The Contractor shall afford the Owner and Separate Contractors reasonable opportunity for introduction and storage of their materials and equipment and performance of their activities, and shall connect and coordinate the Contractor's construction and operations with theirs as required by the Contract Documents.

§ 6.2.2 If part of the Contractor's Work depends for proper execution or results upon construction or operations by the Owner or a Separate Contractor, the Contractor shall, prior to proceeding with that portion of the Work, promptly notify the Architect of apparent discrepancies or defects in the construction or operations by the Owner or Separate Contractor that would render it unsuitable for proper execution and results of the Contractor's Work. Failure of the Contractor to notify the Architect of apparent discrepancies or defects prior to proceeding with the Work shall constitute an acknowledgment that the Owner's or Separate Contractor's completed or partially completed construction is fit and proper to receive the Contractor's Work. The Contractor shall not be responsible for discrepancies or defects in the construction or operations by the Owner or Separate Contractor that are not apparent.

§ 6.2.3 The Contractor shall reimburse the Owner for costs the Owner incurs that are payable to a Separate Contractor because of the Contractor's delays, improperly timed activities or defective construction. The Owner shall be responsible to the Contractor for costs the Contractor incurs because of a Separate Contractor's delays, improperly timed activities, damage to the Work or defective construction.

§ 6.2.4 The Contractor shall promptly remedy damage that the Contractor wrongfully causes to completed or partially completed construction or to property of the Owner or Separate Contractor as provided in Section 10.2.5.

§ 6.2.5 The Owner and each Separate Contractor shall have the same responsibilities for cutting and patching as are described for the Contractor in Section 3.14.

§ 6.3 Owner's Right to Clean Up

If a dispute arises among the Contractor, Separate Contractors, and the Owner as to the responsibility under their respective contracts for maintaining the premises and surrounding area free from waste materials and rubbish, the Owner may clean up and the Architect will allocate the cost among those responsible.

ARTICLE 7 CHANGES IN THE WORK

§ 7.1 General

§ 7.1.1 Changes in the Work may be accomplished after execution of the Contract, and without invalidating the Contract, by Change Order, Construction Change Directive or order for a minor change in the Work, subject to the limitations stated in this Article 7 and elsewhere in the Contract Documents.

§ 7.1.2 A Change Order shall be based upon agreement among the Owner, Contractor, and Architect. A Construction Change Directive requires agreement by the Owner and Architect and may or may not be agreed to by the Contractor. An order for a minor change in the Work may be issued by the Architect alone.

§ 7.1.3 Changes in the Work shall be performed under applicable provisions of the Contract Documents. The Contractor shall proceed promptly with changes in the Work, unless otherwise provided in the Change Order, Construction Change Directive, or order for a minor change in the Work.

§ 7.2 Change Orders

§ 7.2.1 A Change Order is a written instrument prepared by the Architect and signed by the Owner, Contractor, and Architect stating their agreement upon all of the following:

- **.1** The change in the Work;
- **.2** The amount of the adjustment, if any, in the Contract Sum; and
- **.3** The extent of the adjustment, if any, in the Contract Time.

§ 7.3 Construction Change Directives

§ 7.3.1 A Construction Change Directive is a written order prepared by the Architect and signed by the Owner and Architect, directing a change in the Work prior to agreement on adjustment, if any, in the Contract Sum or Contract Time, or both. The Owner may by Construction Change Directive, without invalidating the Contract, order changes in the Work within the general scope of the Contract consisting of additions, deletions, or other revisions, the Contract Sum and Contract Time being adjusted accordingly.

§ 7.3.2 A Construction Change Directive shall be used in the absence of total agreement on the terms of a Change Order.

§ 7.3.3 If the Construction Change Directive provides for an adjustment to the Contract Sum, the adjustment shall be based on one of the following methods:

- **.1** Mutual acceptance of a lump sum properly itemized and supported by sufficient substantiating data to permit evaluation;
- **.2** Unit prices stated in the Contract Documents or subsequently agreed upon;
- **.3** Cost to be determined in a manner agreed upon by the parties and a mutually acceptable fixed or percentage fee; or
- **.4** As provided in Section 7.3.4.

§ 7.3.4 If the Contractor does not respond promptly or disagrees with the method for adjustment in the Contract Sum, the Architect shall determine the adjustment on the basis of reasonable expenditures and savings of those performing the Work attributable to the change, including, in case of an increase in the Contract Sum, an amount for overhead and profit as set forth in the Agreement, or if no such amount is set forth in the Agreement, a reasonable amount. In such case, and also under Section 7.3.3.3, the Contractor shall keep and present, in such form as the Architect may prescribe, an itemized accounting together with appropriate supporting data. Unless otherwise provided in the Contract Documents, costs for the purposes of this Section 7.3.4 shall be limited to the following:

- **.1** Costs of labor, including applicable payroll taxes, fringe benefits required by agreement or custom, workers' compensation insurance, and other employee costs approved by the Architect;

.2 Costs of materials, supplies, and equipment, including cost of transportation, whether incorporated or consumed;
.3 Rental costs of machinery and equipment, exclusive of hand tools, whether rented from the Contractor or others;
.4 Costs of premiums for all bonds and insurance, permit fees, and sales, use, or similar taxes, directly related to the change; and
.5 Costs of supervision and field office personnel directly attributable to the change.

§ 7.3.5 If the Contractor disagrees with the adjustment in the Contract Time, the Contractor may make a Claim in accordance with applicable provisions of Article 15.

§ 7.3.6 Upon receipt of a Construction Change Directive, the Contractor shall promptly proceed with the change in the Work involved and advise the Architect of the Contractor's agreement or disagreement with the method, if any, provided in the Construction Change Directive for determining the proposed adjustment in the Contract Sum or Contract Time.

§ 7.3.7 A Construction Change Directive signed by the Contractor indicates the Contractor's agreement therewith, including adjustment in Contract Sum and Contract Time or the method for determining them. Such agreement shall be effective immediately and shall be recorded as a Change Order.

§ 7.3.8 The amount of credit to be allowed by the Contractor to the Owner for a deletion or change that results in a net decrease in the Contract Sum shall be actual net cost as confirmed by the Architect. When both additions and credits covering related Work or substitutions are involved in a change, the allowance for overhead and profit shall be figured on the basis of net increase, if any, with respect to that change.

§ 7.3.9 Pending final determination of the total cost of a Construction Change Directive to the Owner, the Contractor may request payment for Work completed under the Construction Change Directive in Applications for Payment. The Architect will make an interim determination for purposes of monthly certification for payment for those costs and certify for payment the amount that the Architect determines, in the Architect's professional judgment, to be reasonably justified. The Architect's interim determination of cost shall adjust the Contract Sum on the same basis as a Change Order, subject to the right of either party to disagree and assert a Claim in accordance with Article 15.

§ 7.3.10 When the Owner and Contractor agree with a determination made by the Architect concerning the adjustments in the Contract Sum and Contract Time, or otherwise reach agreement upon the adjustments, such agreement shall be effective immediately and the Architect will prepare a Change Order. Change Orders may be issued for all or any part of a Construction Change Directive.

§ 7.4 Minor Changes in the Work

The Architect may order minor changes in the Work that are consistent with the intent of the Contract Documents and do not involve an adjustment in the Contract Sum or an extension of the Contract Time. The Architect's order for minor changes shall be in writing. If the Contractor believes that the proposed minor change in the Work will affect the Contract Sum or Contract Time, the Contractor shall notify the Architect and shall not proceed to implement the change in the Work. If the Contractor performs the Work set forth in the Architect's order for a minor change without prior notice to the Architect that such change will affect the Contract Sum or Contract Time, the Contractor waives any adjustment to the Contract Sum or extension of the Contract Time.

ARTICLE 8 TIME

§ 8.1 Definitions

§ 8.1.1 Unless otherwise provided, Contract Time is the period of time, including authorized adjustments, allotted in the Contract Documents for Substantial Completion of the Work.

§ 8.1.2 The date of commencement of the Work is the date established in the Agreement.

§ 8.1.3 The date of Substantial Completion is the date certified by the Architect in accordance with Section 9.8.

§ 8.1.4 The term "day" as used in the Contract Documents shall mean calendar day unless otherwise specifically defined.

§ 8.2 Progress and Completion

§ 8.2.1 Time limits stated in the Contract Documents are of the essence of the Contract. By executing the Agreement, the Contractor confirms that the Contract Time is a reasonable period for performing the Work.

§ 8.2.2 The Contractor shall not knowingly, except by agreement or instruction of the Owner in writing, commence the Work prior to the effective date of insurance required to be furnished by the Contractor and Owner.

§ 8.2.3 The Contractor shall proceed expeditiously with adequate forces and shall achieve Substantial Completion within the Contract Time.

§ 8.3 Delays and Extensions of Time

§ 8.3.1 If the Contractor is delayed at any time in the commencement or progress of the Work by (1) an act or neglect of the Owner or Architect, of an employee of either, or of a Separate Contractor; (2) by changes ordered in the Work; (3) by labor disputes, fire, unusual delay in deliveries, unavoidable casualties, adverse weather conditions documented in accordance with Section 15.1.6.2, or other causes beyond the Contractor's control; (4) by delay authorized by the Owner pending mediation and binding dispute resolution; or (5) by other causes that the Contractor asserts, and the Architect determines, justify delay, then the Contract Time shall be extended for such reasonable time as the Architect may determine.

§ 8.3.2 Claims relating to time shall be made in accordance with applicable provisions of Article 15.

§ 8.3.3 This Section 8.3 does not preclude recovery of damages for delay by either party under other provisions of the Contract Documents.

ARTICLE 9 PAYMENTS AND COMPLETION

§ 9.1 Contract Sum

§ 9.1.1 The Contract Sum is stated in the Agreement and, including authorized adjustments, is the total amount payable by the Owner to the Contractor for performance of the Work under the Contract Documents.

§ 9.1.2 If unit prices are stated in the Contract Documents or subsequently agreed upon, and if quantities originally contemplated are materially changed so that application of such unit prices to the actual quantities causes substantial inequity to the Owner or Contractor, the applicable unit prices shall be equitably adjusted.

§ 9.2 Schedule of Values

Where the Contract is based on a stipulated sum or Guaranteed Maximum Price, the Contractor shall submit a schedule of values to the Architect before the first Application for Payment, allocating the entire Contract Sum to the various portions of the Work. The schedule of values shall be prepared in the form, and supported by the data to substantiate its accuracy, required by the Architect. This schedule, unless objected to by the Architect, shall be used as a basis for reviewing the Contractor's Applications for Payment. Any changes to the schedule of values shall be submitted to the Architect and supported by such data to substantiate its accuracy as the Architect may require, and unless objected to by the Architect, shall be used as a basis for reviewing the Contractor's subsequent Applications for Payment.

§ 9.3 Applications for Payment

§ 9.3.1 At least ten days before the date established for each progress payment, the Contractor shall submit to the Architect an itemized Application for Payment prepared in accordance with the schedule of values, if required under Section 9.2, for completed portions of the Work. The application shall be notarized, if required, and supported by all data substantiating the Contractor's right to payment that the Owner or Architect require, such as copies of requisitions, and releases and waivers of liens from Subcontractors and suppliers, and shall reflect retainage if provided for in the Contract Documents.

§ 9.3.1.1 As provided in Section 7.3.9, such applications may include requests for payment on account of changes in the Work that have been properly authorized by Construction Change Directives, or by interim determinations of the Architect, but not yet included in Change Orders.

§ 9.3.1.2 Applications for Payment shall not include requests for payment for portions of the Work for which the Contractor does not intend to pay a Subcontractor or supplier, unless such Work has been performed by others whom the Contractor intends to pay.

§ 9.3.2 Unless otherwise provided in the Contract Documents, payments shall be made on account of materials and equipment delivered and suitably stored at the site for subsequent incorporation in the Work. If approved in advance by the Owner, payment may similarly be made for materials and equipment suitably stored off the site at a location agreed upon in writing. Payment for materials and equipment stored on or off the site shall be conditioned upon compliance by the Contractor with procedures satisfactory to the Owner to establish the Owner's title to such materials and equipment or otherwise protect the Owner's interest, and shall include the costs of applicable insurance, storage, and transportation to the site, for such materials and equipment stored off the site.

§ 9.3.3 The Contractor warrants that title to all Work covered by an Application for Payment will pass to the Owner no later than the time of payment. The Contractor further warrants that upon submittal of an Application for Payment all Work for which Certificates for Payment have been previously issued and payments received from the Owner shall, to the best of the Contractor's knowledge, information, and belief, be free and clear of liens, claims, security interests, or encumbrances, in favor of the Contractor, Subcontractors, suppliers, or other persons or entities that provided labor, materials, and equipment relating to the Work.

§ 9.4 Certificates for Payment

§ 9.4.1 The Architect will, within seven days after receipt of the Contractor's Application for Payment, either (1) issue to the Owner a Certificate for Payment in the full amount of the Application for Payment, with a copy to the Contractor; or (2) issue to the Owner a Certificate for Payment for such amount as the Architect determines is properly due, and notify the Contractor and Owner of the Architect's reasons for withholding certification in part as provided in Section 9.5.1; or (3) withhold certification of the entire Application for Payment, and notify the Contractor and Owner of the Architect's reason for withholding certification in whole as provided in Section 9.5.1.

§ 9.4.2 The issuance of a Certificate for Payment will constitute a representation by the Architect to the Owner, based on the Architect's evaluation of the Work and the data in the Application for Payment, that, to the best of the Architect's knowledge, information, and belief, the Work has progressed to the point indicated, the quality of the Work is in accordance with the Contract Documents, and that the Contractor is entitled to payment in the amount certified. The foregoing representations are subject to an evaluation of the Work for conformance with the Contract Documents upon Substantial Completion, to results of subsequent tests and inspections, to correction of minor deviations from the Contract Documents prior to completion, and to specific qualifications expressed by the Architect. However, the issuance of a Certificate for Payment will not be a representation that the Architect has (1) made exhaustive or continuous on-site inspections to check the quality or quantity of the Work; (2) reviewed construction means, methods, techniques, sequences, or procedures; (3) reviewed copies of requisitions received from Subcontractors and suppliers and other data requested by the Owner to substantiate the Contractor's right to payment; or (4) made examination to ascertain how or for what purpose the Contractor has used money previously paid on account of the Contract Sum.

§ 9.5 Decisions to Withhold Certification

§ 9.5.1 The Architect may withhold a Certificate for Payment in whole or in part, to the extent reasonably necessary to protect the Owner, if in the Architect's opinion the representations to the Owner required by Section 9.4.2 cannot be made. If the Architect is unable to certify payment in the amount of the Application, the Architect will notify the Contractor and Owner as provided in Section 9.4.1. If the Contractor and Architect cannot agree on a revised amount, the Architect will promptly issue a Certificate for Payment for the amount for which the Architect is able to make such representations to the Owner. The Architect may also withhold a Certificate for Payment or, because of subsequently discovered evidence, may nullify the whole or a part of a Certificate for Payment previously issued, to such extent as may be necessary in the Architect's opinion to protect the Owner from loss for which the Contractor is responsible, including loss resulting from acts and omissions described in Section 3.3.2, because of

- **.1** defective Work not remedied;
- **.2** third party claims filed or reasonable evidence indicating probable filing of such claims, unless security acceptable to the Owner is provided by the Contractor;
- **.3** failure of the Contractor to make payments properly to Subcontractors or suppliers for labor, materials or equipment;
- **.4** reasonable evidence that the Work cannot be completed for the unpaid balance of the Contract Sum;
- **.5** damage to the Owner or a Separate Contractor;
- **.6** reasonable evidence that the Work will not be completed within the Contract Time, and that the unpaid balance would not be adequate to cover actual or liquidated damages for the anticipated delay; or

.7 repeated failure to carry out the Work in accordance with the Contract Documents.

§ 9.5.2 When either party disputes the Architect's decision regarding a Certificate for Payment under Section 9.5.1, in whole or in part, that party may submit a Claim in accordance with Article 15.

§ 9.5.3 When the reasons for withholding certification are removed, certification will be made for amounts previously withheld.

§ 9.5.4 If the Architect withholds certification for payment under Section 9.5.1.3, the Owner may, at its sole option, issue joint checks to the Contractor and to any Subcontractor or supplier to whom the Contractor failed to make payment for Work properly performed or material or equipment suitably delivered. If the Owner makes payments by joint check, the Owner shall notify the Architect and the Contractor shall reflect such payment on its next Application for Payment.

§ 9.6 Progress Payments

§ 9.6.1 After the Architect has issued a Certificate for Payment, the Owner shall make payment in the manner and within the time provided in the Contract Documents, and shall so notify the Architect.

§ 9.6.2 The Contractor shall pay each Subcontractor, no later than seven days after receipt of payment from the Owner, the amount to which the Subcontractor is entitled, reflecting percentages actually retained from payments to the Contractor on account of the Subcontractor's portion of the Work. The Contractor shall, by appropriate agreement with each Subcontractor, require each Subcontractor to make payments to Sub-subcontractors in a similar manner.

§ 9.6.3 The Architect will, on request, furnish to a Subcontractor, if practicable, information regarding percentages of completion or amounts applied for by the Contractor and action taken thereon by the Architect and Owner on account of portions of the Work done by such Subcontractor.

§ 9.6.4 The Owner has the right to request written evidence from the Contractor that the Contractor has properly paid Subcontractors and suppliers amounts paid by the Owner to the Contractor for subcontracted Work. If the Contractor fails to furnish such evidence within seven days, the Owner shall have the right to contact Subcontractors and suppliers to ascertain whether they have been properly paid. Neither the Owner nor Architect shall have an obligation to pay, or to see to the payment of money to, a Subcontractor or supplier, except as may otherwise be required by law.

§ 9.6.5 The Contractor's payments to suppliers shall be treated in a manner similar to that provided in Sections 9.6.2, 9.6.3 and 9.6.4.

§ 9.6.6 A Certificate for Payment, a progress payment, or partial or entire use or occupancy of the Project by the Owner shall not constitute acceptance of Work not in accordance with the Contract Documents.

§ 9.6.7 Unless the Contractor provides the Owner with a payment bond in the full penal sum of the Contract Sum, payments received by the Contractor for Work properly performed by Subcontractors or provided by suppliers shall be held by the Contractor for those Subcontractors or suppliers who performed Work or furnished materials, or both, under contract with the Contractor for which payment was made by the Owner. Nothing contained herein shall require money to be placed in a separate account and not commingled with money of the Contractor, create any fiduciary liability or tort liability on the part of the Contractor for breach of trust, or entitle any person or entity to an award of punitive damages against the Contractor for breach of the requirements of this provision.

§ 9.6.8 Provided the Owner has fulfilled its payment obligations under the Contract Documents, the Contractor shall defend and indemnify the Owner from all loss, liability, damage or expense, including reasonable attorney's fees and litigation expenses, arising out of any lien claim or other claim for payment by any Subcontractor or supplier of any tier. Upon receipt of notice of a lien claim or other claim for payment, the Owner shall notify the Contractor. If approved by the applicable court, when required, the Contractor may substitute a surety bond for the property against which the lien or other claim for payment has been asserted.

§ 9.7 Failure of Payment

If the Architect does not issue a Certificate for Payment, through no fault of the Contractor, within seven days after receipt of the Contractor's Application for Payment, or if the Owner does not pay the Contractor within seven days after the date established in the Contract Documents, the amount certified by the Architect or awarded by binding dispute resolution, then the Contractor may, upon seven additional days' notice to the Owner and Architect, stop the Work until payment of the amount owing has been received. The Contract Time shall be extended appropriately and the Contract Sum shall be increased by the amount of the Contractor's reasonable costs of shutdown, delay and start-up, plus interest as provided for in the Contract Documents.

§ 9.8 Substantial Completion

§ 9.8.1 Substantial Completion is the stage in the progress of the Work when the Work or designated portion thereof is sufficiently complete in accordance with the Contract Documents so that the Owner can occupy or utilize the Work for its intended use.

§ 9.8.2 When the Contractor considers that the Work, or a portion thereof which the Owner agrees to accept separately, is substantially complete, the Contractor shall prepare and submit to the Architect a comprehensive list of items to be completed or corrected prior to final payment. Failure to include an item on such list does not alter the responsibility of the Contractor to complete all Work in accordance with the Contract Documents.

§ 9.8.3 Upon receipt of the Contractor's list, the Architect will make an inspection to determine whether the Work or designated portion thereof is substantially complete. If the Architect's inspection discloses any item, whether or not included on the Contractor's list, which is not sufficiently complete in accordance with the Contract Documents so that the Owner can occupy or utilize the Work or designated portion thereof for its intended use, the Contractor shall, before issuance of the Certificate of Substantial Completion, complete or correct such item upon notification by the Architect. In such case, the Contractor shall then submit a request for another inspection by the Architect to determine Substantial Completion.

§ 9.8.4 When the Work or designated portion thereof is substantially complete, the Architect will prepare a Certificate of Substantial Completion that shall establish the date of Substantial Completion; establish responsibilities of the Owner and Contractor for security, maintenance, heat, utilities, damage to the Work and insurance; and fix the time within which the Contractor shall finish all items on the list accompanying the Certificate. Warranties required by the Contract Documents shall commence on the date of Substantial Completion of the Work or designated portion thereof unless otherwise provided in the Certificate of Substantial Completion.

§ 9.8.5 The Certificate of Substantial Completion shall be submitted to the Owner and Contractor for their written acceptance of responsibilities assigned to them in the Certificate. Upon such acceptance, and consent of surety if any, the Owner shall make payment of retainage applying to the Work or designated portion thereof. Such payment shall be adjusted for Work that is incomplete or not in accordance with the requirements of the Contract Documents.

§ 9.9 Partial Occupancy or Use

§ 9.9.1 The Owner may occupy or use any completed or partially completed portion of the Work at any stage when such portion is designated by separate agreement with the Contractor, provided such occupancy or use is consented to by the insurer and authorized by public authorities having jurisdiction over the Project. Such partial occupancy or use may commence whether or not the portion is substantially complete, provided the Owner and Contractor have accepted in writing the responsibilities assigned to each of them for payments, retainage, if any, security, maintenance, heat, utilities, damage to the Work and insurance, and have agreed in writing concerning the period for correction of the Work and commencement of warranties required by the Contract Documents. When the Contractor considers a portion substantially complete, the Contractor shall prepare and submit a list to the Architect as provided under Section 9.8.2. Consent of the Contractor to partial occupancy or use shall not be unreasonably withheld. The stage of the progress of the Work shall be determined by written agreement between the Owner and Contractor or, if no agreement is reached, by decision of the Architect.

§ 9.9.2 Immediately prior to such partial occupancy or use, the Owner, Contractor, and Architect shall jointly inspect the area to be occupied or portion of the Work to be used in order to determine and record the condition of the Work.

§ 9.9.3 Unless otherwise agreed upon, partial occupancy or use of a portion or portions of the Work shall not constitute acceptance of Work not complying with the requirements of the Contract Documents.

§ 9.10 Final Completion and Final Payment

§ 9.10.1 Upon receipt of the Contractor's notice that the Work is ready for final inspection and acceptance and upon receipt of a final Application for Payment, the Architect will promptly make such inspection. When the Architect finds the Work acceptable under the Contract Documents and the Contract fully performed, the Architect will promptly issue a final Certificate for Payment stating that to the best of the Architect's knowledge, information and belief, and on the basis of the Architect's on-site visits and inspections, the Work has been completed in accordance with the Contract Documents and that the entire balance found to be due the Contractor and noted in the final Certificate is due and payable. The Architect's final Certificate for Payment will constitute a further representation that conditions listed in Section 9.10.2 as precedent to the Contractor's being entitled to final payment have been fulfilled.

§ 9.10.2 Neither final payment nor any remaining retained percentage shall become due until the Contractor submits to the Architect (1) an affidavit that payrolls, bills for materials and equipment, and other indebtedness connected with the Work for which the Owner or the Owner's property might be responsible or encumbered (less amounts withheld by Owner) have been paid or otherwise satisfied, (2) a certificate evidencing that insurance required by the Contract Documents to remain in force after final payment is currently in effect, (3) a written statement that the Contractor knows of no reason that the insurance will not be renewable to cover the period required by the Contract Documents, (4) consent of surety, if any, to final payment, (5) documentation of any special warranties, such as manufacturers' warranties or specific Subcontractor warranties, and (6) if required by the Owner, other data establishing payment or satisfaction of obligations, such as receipts and releases and waivers of liens, claims, security interests, or encumbrances arising out of the Contract, to the extent and in such form as may be designated by the Owner. If a Subcontractor refuses to furnish a release or waiver required by the Owner, the Contractor may furnish a bond satisfactory to the Owner to indemnify the Owner against such lien, claim, security interest, or encumbrance. If a lien, claim, security interest, or encumbrance remains unsatisfied after payments are made, the Contractor shall refund to the Owner all money that the Owner may be compelled to pay in discharging the lien, claim, security interest, or encumbrance, including all costs and reasonable attorneys' fees.

§ 9.10.3 If, after Substantial Completion of the Work, final completion thereof is materially delayed through no fault of the Contractor or by issuance of Change Orders affecting final completion, and the Architect so confirms, the Owner shall, upon application by the Contractor and certification by the Architect, and without terminating the Contract, make payment of the balance due for that portion of the Work fully completed, corrected, and accepted. If the remaining balance for Work not fully completed or corrected is less than retainage stipulated in the Contract Documents, and if bonds have been furnished, the written consent of the surety to payment of the balance due for that portion of the Work fully completed and accepted shall be submitted by the Contractor to the Architect prior to certification of such payment. Such payment shall be made under terms and conditions governing final payment, except that it shall not constitute a waiver of Claims.

§ 9.10.4 The making of final payment shall constitute a waiver of Claims by the Owner except those arising from

- **.1** liens, Claims, security interests, or encumbrances arising out of the Contract and unsettled;
- **.2** failure of the Work to comply with the requirements of the Contract Documents;
- **.3** terms of special warranties required by the Contract Documents; or
- **.4** audits performed by the Owner, if permitted by the Contract Documents, after final payment.

§ 9.10.5 Acceptance of final payment by the Contractor, a Subcontractor, or a supplier, shall constitute a waiver of claims by that payee except those previously made in writing and identified by that payee as unsettled at the time of final Application for Payment.

ARTICLE 10 PROTECTION OF PERSONS AND PROPERTY

§ 10.1 Safety Precautions and Programs

The Contractor shall be responsible for initiating, maintaining, and supervising all safety precautions and programs in connection with the performance of the Contract.

§ 10.2 Safety of Persons and Property

§ 10.2.1 The Contractor shall take reasonable precautions for safety of, and shall provide reasonable protection to prevent damage, injury, or loss to

- **.1** employees on the Work and other persons who may be affected thereby;

.2 the Work and materials and equipment to be incorporated therein, whether in storage on or off the site, under care, custody, or control of the Contractor, a Subcontractor, or a Sub-subcontractor; and

.3 other property at the site or adjacent thereto, such as trees, shrubs, lawns, walks, pavements, roadways, structures, and utilities not designated for removal, relocation, or replacement in the course of construction.

§ 10.2.2 The Contractor shall comply with, and give notices required by applicable laws, statutes, ordinances, codes, rules and regulations, and lawful orders of public authorities, bearing on safety of persons or property or their protection from damage, injury, or loss.

§ 10.2.3 The Contractor shall implement, erect, and maintain, as required by existing conditions and performance of the Contract, reasonable safeguards for safety and protection, including posting danger signs and other warnings against hazards; promulgating safety regulations; and notifying the owners and users of adjacent sites and utilities of the safeguards.

§ 10.2.4 When use or storage of explosives or other hazardous materials or equipment, or unusual methods are necessary for execution of the Work, the Contractor shall exercise utmost care and carry on such activities under supervision of properly qualified personnel.

§ 10.2.5 The Contractor shall promptly remedy damage and loss (other than damage or loss insured under property insurance required by the Contract Documents) to property referred to in Sections 10.2.1.2 and 10.2.1.3 caused in whole or in part by the Contractor, a Subcontractor, a Sub-subcontractor, or anyone directly or indirectly employed by any of them, or by anyone for whose acts they may be liable and for which the Contractor is responsible under Sections 10.2.1.2 and 10.2.1.3. The Contractor may make a Claim for the cost to remedy the damage or loss to the extent such damage or loss is attributable to acts or omissions of the Owner or Architect or anyone directly or indirectly employed by either of them, or by anyone for whose acts either of them may be liable, and not attributable to the fault or negligence of the Contractor. The foregoing obligations of the Contractor are in addition to the Contractor's obligations under Section 3.18.

§ 10.2.6 The Contractor shall designate a responsible member of the Contractor's organization at the site whose duty shall be the prevention of accidents. This person shall be the Contractor's superintendent unless otherwise designated by the Contractor in writing to the Owner and Architect.

§ 10.2.7 The Contractor shall not permit any part of the construction or site to be loaded so as to cause damage or create an unsafe condition.

§ 10.2.8 Injury or Damage to Person or Property

If either party suffers injury or damage to person or property because of an act or omission of the other party, or of others for whose acts such party is legally responsible, notice of the injury or damage, whether or not insured, shall be given to the other party within a reasonable time not exceeding 21 days after discovery. The notice shall provide sufficient detail to enable the other party to investigate the matter.

§ 10.3 Hazardous Materials and Substances

§ 10.3.1 The Contractor is responsible for compliance with any requirements included in the Contract Documents regarding hazardous materials or substances. If the Contractor encounters a hazardous material or substance not addressed in the Contract Documents and if reasonable precautions will be inadequate to prevent foreseeable bodily injury or death to persons resulting from a material or substance, including but not limited to asbestos or polychlorinated biphenyl (PCB), encountered on the site by the Contractor, the Contractor shall, upon recognizing the condition, immediately stop Work in the affected area and notify the Owner and Architect of the condition.

§ 10.3.2 Upon receipt of the Contractor's notice, the Owner shall obtain the services of a licensed laboratory to verify the presence or absence of the material or substance reported by the Contractor and, in the event such material or substance is found to be present, to cause it to be rendered harmless. Unless otherwise required by the Contract Documents, the Owner shall furnish in writing to the Contractor and Architect the names and qualifications of persons or entities who are to perform tests verifying the presence or absence of the material or substance or who are to perform the task of removal or safe containment of the material or substance. The Contractor and the Architect will promptly reply to the Owner in writing stating whether or not either has reasonable objection to the persons or entities proposed by the Owner. If either the Contractor or Architect has an objection to a person or entity proposed

by the Owner, the Owner shall propose another to whom the Contractor and the Architect have no reasonable objection. When the material or substance has been rendered harmless, Work in the affected area shall resume upon written agreement of the Owner and Contractor. By Change Order, the Contract Time shall be extended appropriately and the Contract Sum shall be increased by the amount of the Contractor's reasonable additional costs of shutdown, delay, and start-up.

§ 10.3.3 To the fullest extent permitted by law, the Owner shall indemnify and hold harmless the Contractor, Subcontractors, Architect, Architect's consultants, and agents and employees of any of them from and against claims, damages, losses, and expenses, including but not limited to attorneys' fees, arising out of or resulting from performance of the Work in the affected area if in fact the material or substance presents the risk of bodily injury or death as described in Section 10.3.1 and has not been rendered harmless, provided that such claim, damage, loss, or expense is attributable to bodily injury, sickness, disease or death, or to injury to or destruction of tangible property (other than the Work itself), except to the extent that such damage, loss, or expense is due to the fault or negligence of the party seeking indemnity.

§ 10.3.4 The Owner shall not be responsible under this Section 10.3 for hazardous materials or substances the Contractor brings to the site unless such materials or substances are required by the Contract Documents. The Owner shall be responsible for hazardous materials or substances required by the Contract Documents, except to the extent of the Contractor's fault or negligence in the use and handling of such materials or substances.

§ 10.3.5 The Contractor shall reimburse the Owner for the cost and expense the Owner incurs (1) for remediation of hazardous materials or substances the Contractor brings to the site and negligently handles, or (2) where the Contractor fails to perform its obligations under Section 10.3.1, except to the extent that the cost and expense are due to the Owner's fault or negligence.

§ 10.3.6 If, without negligence on the part of the Contractor, the Contractor is held liable by a government agency for the cost of remediation of a hazardous material or substance solely by reason of performing Work as required by the Contract Documents, the Owner shall reimburse the Contractor for all cost and expense thereby incurred.

§ 10.4 Emergencies

In an emergency affecting safety of persons or property, the Contractor shall act, at the Contractor's discretion, to prevent threatened damage, injury, or loss. Additional compensation or extension of time claimed by the Contractor on account of an emergency shall be determined as provided in Article 15 and Article 7.

ARTICLE 11 INSURANCE AND BONDS

§ 11.1 Contractor's Insurance and Bonds

§ 11.1.1 The Contractor shall purchase and maintain insurance of the types and limits of liability, containing the endorsements, and subject to the terms and conditions, as described in the Agreement or elsewhere in the Contract Documents. The Contractor shall purchase and maintain the required insurance from an insurance company or insurance companies lawfully authorized to issue insurance in the jurisdiction where the Project is located. The Owner, Architect, and Architect's consultants shall be named as additional insureds under the Contractor's commercial general liability policy or as otherwise described in the Contract Documents.

§ 11.1.2 The Contractor shall provide surety bonds of the types, for such penal sums, and subject to such terms and conditions as required by the Contract Documents. The Contractor shall purchase and maintain the required bonds from a company or companies lawfully authorized to issue surety bonds in the jurisdiction where the Project is located.

§ 11.1.3 Upon the request of any person or entity appearing to be a potential beneficiary of bonds covering payment of obligations arising under the Contract, the Contractor shall promptly furnish a copy of the bonds or shall authorize a copy to be furnished.

§ 11.1.4 Notice of Cancellation or Expiration of Contractor's Required Insurance. Within three (3) business days of the date the Contractor becomes aware of an impending or actual cancellation or expiration of any insurance required by the Contract Documents, the Contractor shall provide notice to the Owner of such impending or actual cancellation or expiration. Upon receipt of notice from the Contractor, the Owner shall, unless the lapse in coverage arises from an act or omission of the Owner, have the right to stop the Work until the lapse in coverage has been cured by the

procurement of replacement coverage by the Contractor. The furnishing of notice by the Contractor shall not relieve the Contractor of any contractual obligation to provide any required coverage.

§ 11.2 Owner's Insurance

§ 11.2.1 The Owner shall purchase and maintain insurance of the types and limits of liability, containing the endorsements, and subject to the terms and conditions, as described in the Agreement or elsewhere in the Contract Documents. The Owner shall purchase and maintain the required insurance from an insurance company or insurance companies lawfully authorized to issue insurance in the jurisdiction where the Project is located.

§ 11.2.2 Failure to Purchase Required Property Insurance. If the Owner fails to purchase and maintain the required property insurance, with all of the coverages and in the amounts described in the Agreement or elsewhere in the Contract Documents, the Owner shall inform the Contractor in writing prior to commencement of the Work. Upon receipt of notice from the Owner, the Contractor may delay commencement of the Work and may obtain insurance that will protect the interests of the Contractor, Subcontractors, and Sub-Subcontractors in the Work. When the failure to provide coverage has been cured or resolved, the Contract Sum and Contract Time shall be equitably adjusted. In the event the Owner fails to procure coverage, the Owner waives all rights against the Contractor, Subcontractors, and Sub-subcontractors to the extent the loss to the Owner would have been covered by the insurance to have been procured by the Owner. The cost of the insurance shall be charged to the Owner by a Change Order. If the Owner does not provide written notice, and the Contractor is damaged by the failure or neglect of the Owner to purchase or maintain the required insurance, the Owner shall reimburse the Contractor for all reasonable costs and damages attributable thereto.

§ 11.2.3 Notice of Cancellation or Expiration of Owner's Required Property Insurance. Within three (3) business days of the date the Owner becomes aware of an impending or actual cancellation or expiration of any property insurance required by the Contract Documents, the Owner shall provide notice to the Contractor of such impending or actual cancellation or expiration. Unless the lapse in coverage arises from an act or omission of the Contractor: (1) the Contractor, upon receipt of notice from the Owner, shall have the right to stop the Work until the lapse in coverage has been cured by the procurement of replacement coverage by either the Owner or the Contractor; (2) the Contract Time and Contract Sum shall be equitably adjusted; and (3) the Owner waives all rights against the Contractor, Subcontractors, and Sub-subcontractors to the extent any loss to the Owner would have been covered by the insurance had it not expired or been cancelled. If the Contractor purchases replacement coverage, the cost of the insurance shall be charged to the Owner by an appropriate Change Order. The furnishing of notice by the Owner shall not relieve the Owner of any contractual obligation to provide required insurance.

§ 11.3 Waivers of Subrogation

§ 11.3.1 The Owner and Contractor waive all rights against (1) each other and any of their subcontractors, sub-subcontractors, agents, and employees, each of the other; (2) the Architect and Architect's consultants; and (3) Separate Contractors, if any, and any of their subcontractors, sub-subcontractors, agents, and employees, for damages caused by fire, or other causes of loss, to the extent those losses are covered by property insurance required by the Agreement or other property insurance applicable to the Project, except such rights as they have to proceeds of such insurance. The Owner or Contractor, as appropriate, shall require similar written waivers in favor of the individuals and entities identified above from the Architect, Architect's consultants, Separate Contractors, subcontractors, and sub-subcontractors. The policies of insurance purchased and maintained by each person or entity agreeing to waive claims pursuant to this section 11.3.1 shall not prohibit this waiver of subrogation. This waiver of subrogation shall be effective as to a person or entity (1) even though that person or entity would otherwise have a duty of indemnification, contractual or otherwise, (2) even though that person or entity did not pay the insurance premium directly or indirectly, or (3) whether or not the person or entity had an insurable interest in the damaged property.

§ 11.3.2 If during the Project construction period the Owner insures properties, real or personal or both, at or adjacent to the site by property insurance under policies separate from those insuring the Project, or if after final payment property insurance is to be provided on the completed Project through a policy or policies other than those insuring the Project during the construction period, to the extent permissible by such policies, the Owner waives all rights in accordance with the terms of Section 11.3.1 for damages caused by fire or other causes of loss covered by this separate property insurance.

§ 11.4 Loss of Use, Business Interruption, and Delay in Completion Insurance

The Owner, at the Owner's option, may purchase and maintain insurance that will protect the Owner against loss of use of the Owner's property, or the inability to conduct normal operations, due to fire or other causes of loss. The Owner waives all rights of action against the Contractor and Architect for loss of use of the Owner's property, due to fire or other hazards however caused.

§11.5 Adjustment and Settlement of Insured Loss

§ 11.5.1 A loss insured under the property insurance required by the Agreement shall be adjusted by the Owner as fiduciary and made payable to the Owner as fiduciary for the insureds, as their interests may appear, subject to requirements of any applicable mortgagee clause and of Section 11.5.2. The Owner shall pay the Architect and Contractor their just shares of insurance proceeds received by the Owner, and by appropriate agreements the Architect and Contractor shall make payments to their consultants and Subcontractors in similar manner.

§ 11.5.2 Prior to settlement of an insured loss, the Owner shall notify the Contractor of the terms of the proposed settlement as well as the proposed allocation of the insurance proceeds. The Contractor shall have 14 days from receipt of notice to object to the proposed settlement or allocation of the proceeds. If the Contractor does not object, the Owner shall settle the loss and the Contractor shall be bound by the settlement and allocation. Upon receipt, the Owner shall deposit the insurance proceeds in a separate account and make the appropriate distributions. Thereafter, if no other agreement is made or the Owner does not terminate the Contract for convenience, the Owner and Contractor shall execute a Change Order for reconstruction of the damaged or destroyed Work in the amount allocated for that purpose. If the Contractor timely objects to either the terms of the proposed settlement or the allocation of the proceeds, the Owner may proceed to settle the insured loss, and any dispute between the Owner and Contractor arising out of the settlement or allocation of the proceeds shall be resolved pursuant to Article 15. Pending resolution of any dispute, the Owner may issue a Construction Change Directive for the reconstruction of the damaged or destroyed Work.

ARTICLE 12 UNCOVERING AND CORRECTION OF WORK

§ 12.1 Uncovering of Work

§ 12.1.1 If a portion of the Work is covered contrary to the Architect's request or to requirements specifically expressed in the Contract Documents, it must, if requested in writing by the Architect, be uncovered for the Architect's examination and be replaced at the Contractor's expense without change in the Contract Time.

§ 12.1.2 If a portion of the Work has been covered that the Architect has not specifically requested to examine prior to its being covered, the Architect may request to see such Work and it shall be uncovered by the Contractor. If such Work is in accordance with the Contract Documents, the Contractor shall be entitled to an equitable adjustment to the Contract Sum and Contract Time as may be appropriate. If such Work is not in accordance with the Contract Documents, the costs of uncovering the Work, and the cost of correction, shall be at the Contractor's expense.

§ 12.2 Correction of Work

§ 12.2.1 Before Substantial Completion

The Contractor shall promptly correct Work rejected by the Architect or failing to conform to the requirements of the Contract Documents, discovered before Substantial Completion and whether or not fabricated, installed or completed. Costs of correcting such rejected Work, including additional testing and inspections, the cost of uncovering and replacement, and compensation for the Architect's services and expenses made necessary thereby, shall be at the Contractor's expense.

§ 12.2.2 After Substantial Completion

§ 12.2.2.1 In addition to the Contractor's obligations under Section 3.5, if, within one year after the date of Substantial Completion of the Work or designated portion thereof or after the date for commencement of warranties established under Section 9.9.1, or by terms of any applicable special warranty required by the Contract Documents, any of the Work is found to be not in accordance with the requirements of the Contract Documents, the Contractor shall correct it promptly after receipt of notice from the Owner to do so, unless the Owner has previously given the Contractor a written acceptance of such condition. The Owner shall give such notice promptly after discovery of the condition. During the one-year period for correction of Work, if the Owner fails to notify the Contractor and give the Contractor an opportunity to make the correction, the Owner waives the rights to require correction by the Contractor and to make a claim for breach of warranty. If the Contractor fails to correct nonconforming Work within a reasonable time during that period after receipt of notice from the Owner or Architect, the Owner may correct it in accordance with Section 2.5.

§ 12.2.2.2 The one-year period for correction of Work shall be extended with respect to portions of Work first performed after Substantial Completion by the period of time between Substantial Completion and the actual completion of that portion of the Work.

§ 12.2.2.3 The one-year period for correction of Work shall not be extended by corrective Work performed by the Contractor pursuant to this Section 12.2.

§ 12.2.3 The Contractor shall remove from the site portions of the Work that are not in accordance with the requirements of the Contract Documents and are neither corrected by the Contractor nor accepted by the Owner.

§ 12.2.4 The Contractor shall bear the cost of correcting destroyed or damaged construction of the Owner or Separate Contractors, whether completed or partially completed, caused by the Contractor's correction or removal of Work that is not in accordance with the requirements of the Contract Documents.

§ 12.2.5 Nothing contained in this Section 12.2 shall be construed to establish a period of limitation with respect to other obligations the Contractor has under the Contract Documents. Establishment of the one-year period for correction of Work as described in Section 12.2.2 relates only to the specific obligation of the Contractor to correct the Work, and has no relationship to the time within which the obligation to comply with the Contract Documents may be sought to be enforced, nor to the time within which proceedings may be commenced to establish the Contractor's liability with respect to the Contractor's obligations other than specifically to correct the Work.

§ 12.3 Acceptance of Nonconforming Work

If the Owner prefers to accept Work that is not in accordance with the requirements of the Contract Documents, the Owner may do so instead of requiring its removal and correction, in which case the Contract Sum will be reduced as appropriate and equitable. Such adjustment shall be effected whether or not final payment has been made.

ARTICLE 13 MISCELLANEOUS PROVISIONS

§ 13.1 Governing Law

The Contract shall be governed by the law of the place where the Project is located, excluding that jurisdiction's choice of law rules. If the parties have selected arbitration as the method of binding dispute resolution, the Federal Arbitration Act shall govern Section 15.4.

§ 13.2 Successors and Assigns

§ 13.2.1 The Owner and Contractor respectively bind themselves, their partners, successors, assigns, and legal representatives to covenants, agreements, and obligations contained in the Contract Documents. Except as provided in Section 13.2.2, neither party to the Contract shall assign the Contract as a whole without written consent of the other. If either party attempts to make an assignment without such consent, that party shall nevertheless remain legally responsible for all obligations under the Contract.

§ 13.2.2 The Owner may, without consent of the Contractor, assign the Contract to a lender providing construction financing for the Project, if the lender assumes the Owner's rights and obligations under the Contract Documents. The Contractor shall execute all consents reasonably required to facilitate the assignment.

§ 13.3 Rights and Remedies

§ 13.3.1 Duties and obligations imposed by the Contract Documents and rights and remedies available thereunder shall be in addition to and not a limitation of duties, obligations, rights, and remedies otherwise imposed or available by law.

§ 13.3.2 No action or failure to act by the Owner, Architect, or Contractor shall constitute a waiver of a right or duty afforded them under the Contract, nor shall such action or failure to act constitute approval of or acquiescence in a breach thereunder, except as may be specifically agreed upon in writing.

§ 13.4 Tests and Inspections

§ 13.4.1 Tests, inspections, and approvals of portions of the Work shall be made as required by the Contract Documents and by applicable laws, statutes, ordinances, codes, rules, and regulations or lawful orders of public authorities. Unless otherwise provided, the Contractor shall make arrangements for such tests, inspections, and approvals with an independent testing laboratory or entity acceptable to the Owner, or with the appropriate public authority, and shall bear all related costs of tests, inspections, and approvals. The Contractor shall give the Architect

timely notice of when and where tests and inspections are to be made so that the Architect may be present for such procedures. The Owner shall bear costs of tests, inspections, or approvals that do not become requirements until after bids are received or negotiations concluded. The Owner shall directly arrange and pay for tests, inspections, or approvals where building codes or applicable laws or regulations so require.

§ 13.4.2 If the Architect, Owner, or public authorities having jurisdiction determine that portions of the Work require additional testing, inspection, or approval not included under Section 13.4.1, the Architect will, upon written authorization from the Owner, instruct the Contractor to make arrangements for such additional testing, inspection, or approval, by an entity acceptable to the Owner, and the Contractor shall give timely notice to the Architect of when and where tests and inspections are to be made so that the Architect may be present for such procedures. Such costs, except as provided in Section 13.4.3, shall be at the Owner's expense.

§ 13.4.3 If procedures for testing, inspection, or approval under Sections 13.4.1 and 13.4.2 reveal failure of the portions of the Work to comply with requirements established by the Contract Documents, all costs made necessary by such failure, including those of repeated procedures and compensation for the Architect's services and expenses, shall be at the Contractor's expense.

§ 13.4.4 Required certificates of testing, inspection, or approval shall, unless otherwise required by the Contract Documents, be secured by the Contractor and promptly delivered to the Architect.

§ 13.4.5 If the Architect is to observe tests, inspections, or approvals required by the Contract Documents, the Architect will do so promptly and, where practicable, at the normal place of testing.

§ 13.4.6 Tests or inspections conducted pursuant to the Contract Documents shall be made promptly to avoid unreasonable delay in the Work.

§ 13.5 Interest

Payments due and unpaid under the Contract Documents shall bear interest from the date payment is due at the rate the parties agree upon in writing or, in the absence thereof, at the legal rate prevailing from time to time at the place where the Project is located.

ARTICLE 14 TERMINATION OR SUSPENSION OF THE CONTRACT

§ 14.1 Termination by the Contractor

§ 14.1.1 The Contractor may terminate the Contract if the Work is stopped for a period of 30 consecutive days through no act or fault of the Contractor, a Subcontractor, a Sub-subcontractor, their agents or employees, or any other persons or entities performing portions of the Work, for any of the following reasons:

- **.1** Issuance of an order of a court or other public authority having jurisdiction that requires all Work to be stopped;
- **.2** An act of government, such as a declaration of national emergency, that requires all Work to be stopped;
- **.3** Because the Architect has not issued a Certificate for Payment and has not notified the Contractor of the reason for withholding certification as provided in Section 9.4.1, or because the Owner has not made payment on a Certificate for Payment within the time stated in the Contract Documents; or
- **.4** The Owner has failed to furnish to the Contractor reasonable evidence as required by Section 2.2.

§ 14.1.2 The Contractor may terminate the Contract if, through no act or fault of the Contractor, a Subcontractor, a Sub-subcontractor, their agents or employees, or any other persons or entities performing portions of the Work, repeated suspensions, delays, or interruptions of the entire Work by the Owner as described in Section 14.3, constitute in the aggregate more than 100 percent of the total number of days scheduled for completion, or 120 days in any 365-day period, whichever is less.

§ 14.1.3 If one of the reasons described in Section 14.1.1 or 14.1.2 exists, the Contractor may, upon seven days' notice to the Owner and Architect, terminate the Contract and recover from the Owner payment for Work executed, as well as reasonable overhead and profit on Work not executed, and costs incurred by reason of such termination.

§ 14.1.4 If the Work is stopped for a period of 60 consecutive days through no act or fault of the Contractor, a Subcontractor, a Sub-subcontractor, or their agents or employees or any other persons or entities performing portions of the Work because the Owner has repeatedly failed to fulfill the Owner's obligations under the Contract

Documents with respect to matters important to the progress of the Work, the Contractor may, upon seven additional days' notice to the Owner and the Architect, terminate the Contract and recover from the Owner as provided in Section 14.1.3.

§ 14.2 Termination by the Owner for Cause

§ 14.2.1 The Owner may terminate the Contract if the Contractor

- **.1** repeatedly refuses or fails to supply enough properly skilled workers or proper materials;
- **.2** fails to make payment to Subcontractors or suppliers in accordance with the respective agreements between the Contractor and the Subcontractors or suppliers;
- **.3** repeatedly disregards applicable laws, statutes, ordinances, codes, rules and regulations, or lawful orders of a public authority; or
- **.4** otherwise is guilty of substantial breach of a provision of the Contract Documents.

§ 14.2.2 When any of the reasons described in Section 14.2.1 exist, and upon certification by the Architect that sufficient cause exists to justify such action, the Owner may, without prejudice to any other rights or remedies of the Owner and after giving the Contractor and the Contractor's surety, if any, seven days' notice, terminate employment of the Contractor and may, subject to any prior rights of the surety:

- **.1** Exclude the Contractor from the site and take possession of all materials, equipment, tools, and construction equipment and machinery thereon owned by the Contractor;
- **.2** Accept assignment of subcontracts pursuant to Section 5.4; and
- **.3** Finish the Work by whatever reasonable method the Owner may deem expedient. Upon written request of the Contractor, the Owner shall furnish to the Contractor a detailed accounting of the costs incurred by the Owner in finishing the Work.

§ 14.2.3 When the Owner terminates the Contract for one of the reasons stated in Section 14.2.1, the Contractor shall not be entitled to receive further payment until the Work is finished.

§ 14.2.4 If the unpaid balance of the Contract Sum exceeds costs of finishing the Work, including compensation for the Architect's services and expenses made necessary thereby, and other damages incurred by the Owner and not expressly waived, such excess shall be paid to the Contractor. If such costs and damages exceed the unpaid balance, the Contractor shall pay the difference to the Owner. The amount to be paid to the Contractor or Owner, as the case may be, shall be certified by the Initial Decision Maker, upon application, and this obligation for payment shall survive termination of the Contract.

§ 14.3 Suspension by the Owner for Convenience

§ 14.3.1 The Owner may, without cause, order the Contractor in writing to suspend, delay or interrupt the Work, in whole or in part for such period of time as the Owner may determine.

§ 14.3.2 The Contract Sum and Contract Time shall be adjusted for increases in the cost and time caused by suspension, delay, or interruption under Section 14.3.1. Adjustment of the Contract Sum shall include profit. No adjustment shall be made to the extent

- **.1** that performance is, was, or would have been, so suspended, delayed, or interrupted, by another cause for which the Contractor is responsible; or
- **.2** that an equitable adjustment is made or denied under another provision of the Contract.

§ 14.4 Termination by the Owner for Convenience

§ 14.4.1 The Owner may, at any time, terminate the Contract for the Owner's convenience and without cause.

§ 14.4.2 Upon receipt of notice from the Owner of such termination for the Owner's convenience, the Contractor shall

- **.1** cease operations as directed by the Owner in the notice;
- **.2** take actions necessary, or that the Owner may direct, for the protection and preservation of the Work; and
- **.3** except for Work directed to be performed prior to the effective date of termination stated in the notice, terminate all existing subcontracts and purchase orders and enter into no further subcontracts and purchase orders.

§ 14.4.3 In case of such termination for the Owner's convenience, the Owner shall pay the Contractor for Work

properly executed; costs incurred by reason of the termination, including costs attributable to termination of Subcontracts; and the termination fee, if any, set forth in the Agreement.

ARTICLE 15 CLAIMS AND DISPUTES

§ 15.1 Claims

§ 15.1.1 Definition

A Claim is a demand or assertion by one of the parties seeking, as a matter of right, payment of money, a change in the Contract Time, or other relief with respect to the terms of the Contract. The term "Claim" also includes other disputes and matters in question between the Owner and Contractor arising out of or relating to the Contract. The responsibility to substantiate Claims shall rest with the party making the Claim. This Section 15.1.1 does not require the Owner to file a Claim in order to impose liquidated damages in accordance with the Contract Documents.

§ 15.1.2 Time Limits on Claims

The Owner and Contractor shall commence all Claims and causes of action against the other and arising out of or related to the Contract, whether in contract, tort, breach of warranty or otherwise, in accordance with the requirements of the binding dispute resolution method selected in the Agreement and within the period specified by applicable law, but in any case not more than 10 years after the date of Substantial Completion of the Work. The Owner and Contractor waive all Claims and causes of action not commenced in accordance with this Section 15.1.2.

§ 15.1.3 Notice of Claims

§ 15.1.3.1 Claims by either the Owner or Contractor, where the condition giving rise to the Claim is first discovered prior to expiration of the period for correction of the Work set forth in Section 12.2.2, shall be initiated by notice to the other party and to the Initial Decision Maker with a copy sent to the Architect, if the Architect is not serving as the Initial Decision Maker. Claims by either party under this Section 15.1.3.1 shall be initiated within 21 days after occurrence of the event giving rise to such Claim or within 21 days after the claimant first recognizes the condition giving rise to the Claim, whichever is later.

§ 15.1.3.2 Claims by either the Owner or Contractor, where the condition giving rise to the Claim is first discovered after expiration of the period for correction of the Work set forth in Section 12.2.2, shall be initiated by notice to the other party. In such event, no decision by the Initial Decision Maker is required.

§ 15.1.4 Continuing Contract Performance

§ 15.1.4.1 Pending final resolution of a Claim, except as otherwise agreed in writing or as provided in Section 9.7 and Article 14, the Contractor shall proceed diligently with performance of the Contract and the Owner shall continue to make payments in accordance with the Contract Documents.

§ 15.1.4.2 The Contract Sum and Contract Time shall be adjusted in accordance with the Initial Decision Maker's decision, subject to the right of either party to proceed in accordance with this Article 15. The Architect will issue Certificates for Payment in accordance with the decision of the Initial Decision Maker.

§ 15.1.5 Claims for Additional Cost

If the Contractor wishes to make a Claim for an increase in the Contract Sum, notice as provided in Section 15.1.3 shall be given before proceeding to execute the portion of the Work that is the subject of the Claim. Prior notice is not required for Claims relating to an emergency endangering life or property arising under Section 10.4.

§ 15.1.6 Claims for Additional Time

§ 15.1.6.1 If the Contractor wishes to make a Claim for an increase in the Contract Time, notice as provided in Section 15.1.3 shall be given. The Contractor's Claim shall include an estimate of cost and of probable effect of delay on progress of the Work. In the case of a continuing delay, only one Claim is necessary.

§ 15.1.6.2 If adverse weather conditions are the basis for a Claim for additional time, such Claim shall be documented by data substantiating that weather conditions were abnormal for the period of time, could not have been reasonably anticipated, and had an adverse effect on the scheduled construction.

§ 15.1.7 Waiver of Claims for Consequential Damages

The Contractor and Owner waive Claims against each other for consequential damages arising out of or relating to this Contract. This mutual waiver includes

.1 damages incurred by the Owner for rental expenses, for losses of use, income, profit, financing, business and reputation, and for loss of management or employee productivity or of the services of such persons; and

.2 damages incurred by the Contractor for principal office expenses including the compensation of personnel stationed there, for losses of financing, business and reputation, and for loss of profit, except anticipated profit arising directly from the Work.

This mutual waiver is applicable, without limitation, to all consequential damages due to either party's termination in accordance with Article 14. Nothing contained in this Section 15.1.7 shall be deemed to preclude assessment of liquidated damages, when applicable, in accordance with the requirements of the Contract Documents.

§ 15.2 Initial Decision

§ 15.2.1 Claims, excluding those where the condition giving rise to the Claim is first discovered after expiration of the period for correction of the Work set forth in Section 12.2.2 or arising under Sections 10.3, 10.4, and 11.5, shall be referred to the Initial Decision Maker for initial decision. The Architect will serve as the Initial Decision Maker, unless otherwise indicated in the Agreement. Except for those Claims excluded by this Section 15.2.1, an initial decision shall be required as a condition precedent to mediation of any Claim. If an initial decision has not been rendered within 30 days after the Claim has been referred to the Initial Decision Maker, the party asserting the Claim may demand mediation and binding dispute resolution without a decision having been rendered. Unless the Initial Decision Maker and all affected parties agree, the Initial Decision Maker will not decide disputes between the Contractor and persons or entities other than the Owner.

§ 15.2.2 The Initial Decision Maker will review Claims and within ten days of the receipt of a Claim take one or more of the following actions: (1) request additional supporting data from the claimant or a response with supporting data from the other party, (2) reject the Claim in whole or in part, (3) approve the Claim, (4) suggest a compromise, or (5) advise the parties that the Initial Decision Maker is unable to resolve the Claim if the Initial Decision Maker lacks sufficient information to evaluate the merits of the Claim or if the Initial Decision Maker concludes that, in the Initial Decision Maker's sole discretion, it would be inappropriate for the Initial Decision Maker to resolve the Claim.

§ 15.2.3 In evaluating Claims, the Initial Decision Maker may, but shall not be obligated to, consult with or seek information from either party or from persons with special knowledge or expertise who may assist the Initial Decision Maker in rendering a decision. The Initial Decision Maker may request the Owner to authorize retention of such persons at the Owner's expense.

§ 15.2.4 If the Initial Decision Maker requests a party to provide a response to a Claim or to furnish additional supporting data, such party shall respond, within ten days after receipt of the request, and shall either (1) provide a response on the requested supporting data, (2) advise the Initial Decision Maker when the response or supporting data will be furnished, or (3) advise the Initial Decision Maker that no supporting data will be furnished. Upon receipt of the response or supporting data, if any, the Initial Decision Maker will either reject or approve the Claim in whole or in part.

§ 15.2.5 The Initial Decision Maker will render an initial decision approving or rejecting the Claim, or indicating that the Initial Decision Maker is unable to resolve the Claim. This initial decision shall (1) be in writing; (2) state the reasons therefor; and (3) notify the parties and the Architect, if the Architect is not serving as the Initial Decision Maker, of any change in the Contract Sum or Contract Time or both. The initial decision shall be final and binding on the parties but subject to mediation and, if the parties fail to resolve their dispute through mediation, to binding dispute resolution.

§ 15.2.6 Either party may file for mediation of an initial decision at any time, subject to the terms of Section 15.2.6.1.

§ 15.2.6.1 Either party may, within 30 days from the date of receipt of an initial decision, demand in writing that the other party file for mediation. If such a demand is made and the party receiving the demand fails to file for mediation within 30 days after receipt thereof, then both parties waive their rights to mediate or pursue binding dispute resolution proceedings with respect to the initial decision.

§ 15.2.7 In the event of a Claim against the Contractor, the Owner may, but is not obligated to, notify the surety, if any, of the nature and amount of the Claim. If the Claim relates to a possibility of a Contractor's default, the Owner may, but is not obligated to, notify the surety and request the surety's assistance in resolving the controversy.

§ 15.2.8 If a Claim relates to or is the subject of a mechanic's lien, the party asserting such Claim may proceed in accordance with applicable law to comply with the lien notice or filing deadlines.

§ 15.3 Mediation

§ 15.3.1 Claims, disputes, or other matters in controversy arising out of or related to the Contract, except those waived as provided for in Sections 9.10.4, 9.10.5, and 15.1.7, shall be subject to mediation as a condition precedent to binding dispute resolution.

§ 15.3.2 The parties shall endeavor to resolve their Claims by mediation which, unless the parties mutually agree otherwise, shall be administered by the American Arbitration Association in accordance with its Construction Industry Mediation Procedures in effect on the date of the Agreement. A request for mediation shall be made in writing, delivered to the other party to the Contract, and filed with the person or entity administering the mediation. The request may be made concurrently with the filing of binding dispute resolution proceedings but, in such event, mediation shall proceed in advance of binding dispute resolution proceedings, which shall be stayed pending mediation for a period of 60 days from the date of filing, unless stayed for a longer period by agreement of the parties or court order. If an arbitration is stayed pursuant to this Section 15.3.2, the parties may nonetheless proceed to the selection of the arbitrator(s) and agree upon a schedule for later proceedings.

§ 15.3.3 Either party may, within 30 days from the date that mediation has been concluded without resolution of the dispute or 60 days after mediation has been demanded without resolution of the dispute, demand in writing that the other party file for binding dispute resolution. If such a demand is made and the party receiving the demand fails to file for binding dispute resolution within 60 days after receipt thereof, then both parties waive their rights to binding dispute resolution proceedings with respect to the initial decision.

§ 15.3.4 The parties shall share the mediator's fee and any filing fees equally. The mediation shall be held in the place where the Project is located, unless another location is mutually agreed upon. Agreements reached in mediation shall be enforceable as settlement agreements in any court having jurisdiction thereof.

§ 15.4 Arbitration

§ 15.4.1 If the parties have selected arbitration as the method for binding dispute resolution in the Agreement, any Claim subject to, but not resolved by, mediation shall be subject to arbitration which, unless the parties mutually agree otherwise, shall be administered by the American Arbitration Association in accordance with its Construction Industry Arbitration Rules in effect on the date of the Agreement. The Arbitration shall be conducted in the place where the Project is located, unless another location is mutually agreed upon. A demand for arbitration shall be made in writing, delivered to the other party to the Contract, and filed with the person or entity administering the arbitration. The party filing a notice of demand for arbitration must assert in the demand all Claims then known to that party on which arbitration is permitted to be demanded.

§ 15.4.1.1 A demand for arbitration shall be made no earlier than concurrently with the filing of a request for mediation, but in no event shall it be made after the date when the institution of legal or equitable proceedings based on the Claim would be barred by the applicable statute of limitations. For statute of limitations purposes, receipt of a written demand for arbitration by the person or entity administering the arbitration shall constitute the institution of legal or equitable proceedings based on the Claim.

§ 15.4.2 The award rendered by the arbitrator or arbitrators shall be final, and judgment may be entered upon it in accordance with applicable law in any court having jurisdiction thereof.

§ 15.4.3 The foregoing agreement to arbitrate and other agreements to arbitrate with an additional person or entity duly consented to by parties to the Agreement, shall be specifically enforceable under applicable law in any court having jurisdiction thereof.

§ 15.4.4 Consolidation or Joinder

§ 15.4.4.1 Subject to the rules of the American Arbitration Association or other applicable arbitration rules, either party may consolidate an arbitration conducted under this Agreement with any other arbitration to which it is a party

provided that (1) the arbitration agreement governing the other arbitration permits consolidation, (2) the arbitrations to be consolidated substantially involve common questions of law or fact, and (3) the arbitrations employ materially similar procedural rules and methods for selecting arbitrator(s).

§ 15.4.4.2 Subject to the rules of the American Arbitration Association or other applicable arbitration rules, either party may include by joinder persons or entities substantially involved in a common question of law or fact whose presence is required if complete relief is to be accorded in arbitration, provided that the party sought to be joined consents in writing to such joinder. Consent to arbitration involving an additional person or entity shall not constitute consent to arbitration of any claim, dispute or other matter in question not described in the written consent.

§ 15.4.4.3 The Owner and Contractor grant to any person or entity made a party to an arbitration conducted under this Section 15.4, whether by joinder or consolidation, the same rights of joinder and consolidation as those of the Owner and Contractor under this Agreement.

GENERAL CONDITIONS

The Work of this Contract shall be subject to the American Institute of Architects Document A201, "General Conditions of the Contract for Construction", herein referred to as the General Conditions.

SUPPLEMENTARY CONDITIONS

The supplementary Conditions contain changes and additions to the General Conditions. Where any part of the General Conditions is modified or voided by the Supplementary Conditions, the remaining unaltered provisions shall remain in effect.

ARTICLE 1 **Make the following changes**:

1.2.3 **Add the following:** When applied to materials and equipment required for the Work, the words "furnish", "install" and "provide" shall mean the following:

.1 The word "provide" shall mean to furnish, pay for, deliver, install, adjust, clean, and otherwise make materials and equipment fit and ready for their intended use.

.2 The word "furnish" shall mean to secure, pay for, deliver to site, unload, and uncrate materials and equipment.

.3 The word "install" shall mean to place in position, incorporate in the work, adjust, clean, make fit and ready for use and perform all services except those included under the term "furnish".

.4 The phrase "furnish and install" shall be equivalent to the word "provide". Each shall be interpreted to mean "the Contractor shall furnish all labor, material and equipment and install....".

.5 “As required" shall mean as required to produce a fully completed project or result to the satisfaction of the Architect.

.6 Where discrepancies or conflicts occur:

.1 Amendments and Addenda shall take precedence over the Specifications.

.2 The Specifications shall take precedence over the Drawings.

.3 Stated dimensions shall take precedence over scaled dimensions.

.4 Large-scale detail drawings shall take precedence over small-scale drawings.

.5 Schedules shall take precedence over other data on the drawings.

.7 In case of a difference between Drawings or Specifications or within either document itself in describing the Work, the better quality, greater quantity, or costlier work will be assumed to be and shall be included in the Contract price. The Contractor shall not proceed with such work until the Architect has been contacted for clarification and proper direction.

.8 Instructions or specifications of a particular manufacturer as referred to herein shall be binding as a part of this Specification. Obtain such written instructions and maintain on the job with the Specification.

.9 Schedules of materials in various sections of the Specifications are furnished to assist the Contractor. Contractor shall verify the schedules with the Drawings and shall provide any additional materials indicated on the Drawings but not included in the schedules. The greater quantity or highest quality will govern.

Add the following:

1.2.4 All work shown or referred to in the Contract Documents shall be included in the Contract excepting those items which are specifically noted as being "provided under another contract" or "provided by the Owner", or "not in contract (NIC)".

1.2.5 Parties to the Contract shall not take advantage of obvious error or apparent discrepancy in Contract Documents. Notice of discovered error or discrepancy shall immediately be given in writing to the Architect to make such corrections and interpretations as he may deem necessary for completion of the work in a satisfactory and acceptable manner.

ARTICLE 2 **Make the following changes:**

2.3.6 **Revise to read as follows:** "Contractor shall be furnished up to three (3) sets of Contract Drawings and Specifications, and two (2) copies of each drawing which is issued after the date of the Contract. The Contractor shall pay costs of reproduction for any additional copies of Drawings or Specifications he requires."

ARTICLE 3 **Make the following changes:**

Add the following:

3.4.4 Should the Contractor wish to substitute another product or method for products or methods specified or shown in the Contract Documents, whether specified or shown in Contract Documents, whether or not such phrases as "equal to" or "based on" are used, he shall apply in writing for approval. He shall enclose such data as Architect requires to evaluate products. The Architect's decision shall be final. Contractor is responsible for space requirements of substitutions, he shall execute necessary changes in adjacent and relocated situations, he shall execute necessary changes in adjacent and relocated work which are due to such substitutions, without additional cost and he shall be responsible for delays required for evaluation of proposed substitutions.

3.5.3 Project Warranty: Unless otherwise specified, Contractor shall warrant (guaranty) all work against defects resulting from the use of material, workmanship or equipment which is inferior, defective, or not in accordance with the terms of the Contract. This warranty, unless stated otherwise in a given section of the Specifications, shall be for a period of one (1) year from the date of issuance of the Certificate of Substantial Completion for the Project.

3.5.4 Specified Product Warranty: Issued by a manufacturer or fabricator for compliance with requirements of the Contract Documents. Refer to sections of Specifications for requirements of specified warranties.

3.5.5 Coincidental Product Warranty: Available on a product incorporated into the work, by virtue of manufacturer's publication of warranty without regard for application requirement, a non-specified warranty. Contractor shall identify such warranties as they apply.

3.5.6 Warranty Obligations

.1 Contractor shall restore or remove-and-replace warranted work to its originally specified condition, at such time during warranty as it does not comply with or fulfill terms of warranty.

.2 Contractor shall restore or remove-and-replace other work which has been damaged by failure of warranted work, or which must be removed and replaced to gain access to warranted work.

.3 Cost of restoration or removal-and-replacement is Contractor's obligation, without regard to whether Owner has already benefited from use of failing work.

.4 Except as otherwise indicated or required by governing regulations, warranties do not cover consequential damage to property other than the Work of the Contract.

.5 Upon restoration or removal-and-replacement of warranted work which has failed, Contractor shall reinstate the warranty by issuing newly executed form, for at least the remaining period of time of the original warranty, but for not less than half of the original warranty period.

.6 Warranties and warranty periods shall not diminish implied warranties, and shall not deprive Owner of actions, rights, and remedies otherwise available if the Contractor fails to fulfill the requirements of the Contract Documents.

.7 Owner reserves the right to reject coincidental product warranties which conflict with or are less than the requirements of the Contract Documents.

3.5.7 Contractor shall furnish fully executed warranties to Owner in accordance with the General Conditions and Section 017700.

3.6 **Add the following:** No amount shall be included in the bid for State Sales Tax or for Federal Excise Tax on materials or supplies purchased for this project. The Owner will supply tax exempt number.

3.7.1 **Add the following:** The Contractor shall pay costs charged by utility companies for service connections, inspections and tests, and related utility company fees normally assessed as part of the construction process.

ARTICLE 4 **Make the following changes:**

4.2.13 Add to the first sentence, after "...relating to aesthetic effect..."

"and except for claims which have been waived by making or acceptance of final payment as provided by Subparagraphs 9.10.3 and 9.10.4,"

Add the following:

4.3 The provisions of Article 15 notwithstanding, the Contractor expressly agrees to joinder in arbitration proceedings between Owner/Architect upon specific written request of the Owner. This agreement shall be valid with the Architect's acceptance of an equal provision in their respective contracts.

ARTICLE 6 **Add the following:**

6.3.1 In a dispute between the Owner and the Contractor concerning rubbish and orderliness on the site, the Owner may have the rubbish removed and charge the cost to the Contractor. Upon written notification from the Architect that the project requires cleaning, the

Contractor shall within 24 hours remove all rubbish and hazards from the project and shall arrange his material and equipment in an orderly manner on the site. If this cleaning is not completed within 24 hours, the Owner may engage labor to clean up the projects to his satisfaction and deduct the costs from any monies due the Contractor.

ARTICLE 7 **Add the following:**

7.2.2 The Contractor's proposal for changes in the Work shall be itemized completely and in detail and shall include material costs and quantities, labor wages, time, insurance, pensions, and equipment rental other than small tools, and the number of additional calendar days, if any, which are required to complete the Work.

Where unit prices have been established, the proposal shall state the quantity involved and the applicable unit price.

7.5 Allowance for Overhead and Profit

7.5.1 The allowance for overhead and profit is compensation for administration, superintendence, materials for temporary structures, additional premiums on bonds and the use of small tools.

7.5.2 For additions, deletions or other changes in the Work ordered under method 7.3.3.3, the Contractor may apply an allowance of up to fifteen percent (15%) for profit and overhead to the net cost of the work actually performed by him.

7.5.3 Work to be performed by a subcontractor may include an allowance for the subcontractor's overhead and profit not to exceed fifteen percent (15%) of the net cost. The Contractor is permitted up to a **ten percent (10%)** allowance to be applied against the net cost to a subcontractor. In no case shall the total allowance exceed twenty-five percent (25%) of the net cost of work performed by the subcontractor.

7.5.4 The Contractor's allowance of up to ten percent (10%) on changes involving more than one (1) subcontractor shall be applied only to the combined net of cost additions and deductions of all subcontractors.

7.5.5 There shall be no allowance for overhead and profit for the Contractor or any subcontractor on changes resulting in a net deduction.

7.5.6 The provisions of this Article shall apply only to subcontractors as defined in Article 5. Allowance for overhead and profit will be accepted only for those who are direct subcontractors.

ARTICLE 8 **Add the following:**

8.3.4 No extension of time will be allowed for adverse weather conditions unless the number of days of inclement weather is substantially greater or conditions substantially more severe than the average for the calendar period as recorded by a recognized weather observation agency.

ARTICLE 9 **Make the following changes:**

9.3.1 **Revise** "ten days" to read "fifteen (15) days".

Add the following:

9.3.1.3 During progress of the Work, the Owner will pay Contractor ninety-five percent (95%) of the total amount of each monthly payment due. The remaining five percent (5%) will be retained by the Owner until the Project is substantially completed. There will be no further reduction considered until final acceptance of the Project in accordance with the Contract Documents.

9.3.2 **Add the following:** If the Contractor does not submit evidence of payment to vendor for material and equipment stored, the Architect will recommend deduction of the amount previously allowed for the items stored from the current or subsequent Application for Payment.

Add the following:

9.3.2.1 Contractor may include in Application for Payment the delivered cost of equipment and non-perishable materials delivered and stored at the site but not incorporated in the work, under the following conditions:

.1 Items to be protected from fire, theft, vandalism, weather, and other damage.
.2 Storage procedures and areas to be approved.
.3 Items to be available at all times for inspection by the Owner and Architect.

9.3.4 Contractor shall furnish with Application for Payment an invoice establishing value of material and equipment stored at the site along with a statement of amount to be paid the vendor.

.1 Such stored items are subject to inspection by Architect before payment is recommended.
.2 Contractor shall furnish Owner with Certificate of Insurance in accordance with Contract Documents for the full value of the items stored at the site.

9.6.2.1 Contractor shall furnish Architect with satisfactory evidence of payment to vendors supplying material and equipment for approved storage. This shall be done within thirty (30) days after the date of progress payment. Satisfactory evidence of payment shall be one (1) of the following:

.1 Contractor's canceled check in correct amount with identification of invoices paid.
.2 A letter or telegram from vendor with authorized signature stating amounts and invoices paid.
.3 A receipted invoice.

9.6.7.1 Payment for material and equipment delivered and stored shall not relieve Contractor of responsibility for furnishing equipment and material required for the work in the same manner as if such payment were not made.

9.10.6 A prerequisite to final payment shall be that the Contractor furnish proof that he has completed all specification requirements covering the following item as applicable:

Warranties.

ARTICLE 10 **Add the following:**

10.3.4.1 The Contractor shall not bring hazardous materials onto the site nor use in the Work without compliance with the following conditions.

.2 The Contractor shall be solely responsible for the handling, storage, and use of explosive or other hazardous materials when their use is permitted. For such use, the Contractor shall obtain necessary permits from regulating agencies and submit copies of permits to the Architect for review before proceeding with use.

.3 Contractor shall obtain insurance for use of hazardous material and furnish certificates of insurance in keeping with Conditions of the Contract.

ARTICLE 11 **Make the following changes:**

11.1.1 **Revise** "authorized to do business in the jurisdiction in which the Project is located" to read "licensed to do business in Connecticut" and **add** after "Owner," in the last sentence: "State of Connecticut,".

11.1.2 **Revise** "authorized to do business in the jurisdiction in which the Project is located" to read "licensed to do business in Connecticut".

11.2.2 **Revise** "prior to commencement of the Work" to read "within ten (10) days of Notice of Award".

Add the following:

11.6 Miscellaneous Insurance Requirements

11.6.1 The Contractor shall not begin work until he has obtained all insurance as required, nor shall any subcontractor be permitted to commence work until he has obtained all insurance as required under the same provisions. Insurance shall be maintained throughout the life of the Contract.

11.6.2 It shall be the responsibility of the Contractor to obtain Certificates of Insurance from each subcontractor and to make certain that all coverage is maintained throughout the life of the Contract.

11.6.3 The Contractor, before commencing work, shall supply Owner with Certificates of Insurance evidencing compliance with the insurance requirements. Each certificate shall state that the insurance evidenced by such certificate will not be canceled or reduced without thirty (30) days prior written notice to the Owner.

11.6.4 Each subcontractor, before commencing work, shall supply Owner with Certificates of Insurance evidencing compliance with the insurance requirements. Each certificate shall state that the insurance evidenced by such certificate will not be canceled or reduced without thirty (30) days prior written notice to the Owner.

11.6.5 The Contractor shall maintain a file of Certificates of Insurance received from each subcontractor and provide Owner with copy of each certificate.

11.6.6 The Contractor shall furnish to the Owner copies of any endorsements subsequently issued amending coverage or limits.

11.6.7 Insurance shall be provided as required in the attached Insurance Requirements. State of Connecticut and Silver/Petrucelli + Associates shall be named as an additional insured. State of Connecticut and DECD to also be included in the 'hold harmless' indemnification endorsement.

ARTICLE 15 **Make the following changes:**

15.3.2 **Revise to read as follows:** In addition to and prior to arbitration, the parties shall endeavor to settle disputes by mediation in accordance with the Construction Industry Mediation Rules of the American Arbitration Association currently in effect unless the parties mutually agree otherwise. Demand for mediation shall be filed in writing with the other party to this Agreement and with the American Arbitration Association. A demand for mediation shall be made within a reasonable time after the claim, dispute or other matter in w\question has arisen. In no event shall the demand for mediation be made after the date when institution of legal or equitable proceedings based on such claim, dispute or other matter in question would be barred by the applicable statute of limitations. The provisions of Article 15 notwithstanding, the Contractor expressly agrees to joinder in mediation proceedings between Owner/Architect upon specific written request of the Owner. This agreement shall be valid with the Architect's acceptance of an equal provision in their respective contracts.

END OF SECTION

INSURANCE REQUIREMENTS

The successful Bidder will be required to furnish and maintain a comprehensive general liability certificate of insurance naming the Town of Colchester as additional insured. The Candidate shall maintain for the life of the Contract the insurance coverage set forth below provided by insurance companies authorized to do business in the State of Connecticut with a rating by AM Best of "A" or better. A certificate of insurance indicating these amounts, and listing the Town of Colchester as additional insured, must be submitted at the time of award.

A. Commercial General Liability:

Limits of Liability:- Each Occurrence - $1,000,000 General Aggregate - 2,000,000

includes coverage for:

- 1. Products/Completed Operations.
- 2. Contractual Insurance.
- 3. Broad Form Property Damage.
- 4. Independent Contractors.
- 5. Personal Injury.
- 6. Premises-Operations.

B. Auto Liability - Combined Single Limit $1,000,000

C. Owners Contractors Protective Liability (OCP) in the name of The Town of Colchester:

Each Occurrence - $1,000,000

General Aggregate - $1,000,000

D. Worker's Compensation – Statutory

E. Umbrella Policy – $3,000,000 Minimum

F. The Town of Colchester shall be listed as additional insured on Commercial General Liability and Umbrella/Excess policies.

G. The contract of insurance shall provide for notice to the Town of cancellation of insurance policies thirty (30) days before such cancellation is to take effect.

The contractor shall defend, save harmless and indemnify the Town of Colchester, its officers, agents, employees, and assigns from any damages resulting from any challenge to the legality of the bid process or any of the documents used here, including, but not limited to, the Request for Proposals or Contract Agreements. In addition, the contractor agrees to indemnify and hold harmless the Town of Colchester and each of their respective members, employees, officers and agents from and against any claims, demands, losses, costs or liabilities for personal injury or property damage or any other loss which may result from the contractor's performance or lack of performance of the Contract. Such "losses" shall include all reasonable attorney's fees and costs incurred in the representation of the Town, or any of their respective members, officers, employees, sub-committees of the Town or agents in any suit or claim arising from the contractor's performance or lack of performance of the Contract or arising from the enforcement of this provision.

AIA® Document G702® – 1992

Application and Certificate for Payment

TO OWNER:

PROJECT:

APPLICATION NO:
PERIOD TO:
CONTRACT FOR:
CONTRACT DATE:
PROJECT NOS: / /

Distribution to:
OWNER: ☐
ARCHITECT: ☐
CONTRACTOR: ☐
FIELD: ☐
OTHER : ☐

FROM CONTRACTOR:

VIA ARCHITECT:

CONTRACTOR'S APPLICATION FOR PAYMENT

Application is made for payment, as shown below, in connection with the Contract.
AIA Document G703®, Continuation Sheet, is attached.

1. ORIGINAL CONTRACT SUM		$0.00
2. NET CHANGE BY CHANGE ORDERS		$0.00
3. CONTRACT SUM TO DATE (Line 1 ± 2)		$0.00
4. TOTAL COMPLETED & STORED TO DATE (Column G on G703)		$0.00
5. RETAINAGE:		
a. 0 % of Completed Work (Column D + E on G703)	$0.00	
b. 0 % of Stored Material (Column F on G703)	$0.00	
Total Retainage (Lines 5a + 5b or Total in Column I of G703)		$0.00
6. TOTAL EARNED LESS RETAINAGE (Line 4 Less Line 5 Total)		$0.00
7. LESS PREVIOUS CERTIFICATES FOR PAYMENT (Line 6 from prior Certificate)		$0.00
8. CURRENT PAYMENT DUE		$0.00
9. BALANCE TO FINISH, INCLUDING RETAINAGE (Line 3 less Line 6)	$0.00	

CHANGE ORDER SUMMARY	ADDITIONS	DEDUCTIONS
Total changes approved in previous months by Owner	$0.00	$0.00
Total approved this Month	$0.00	$0.00
TOTALS	$0.00	$0.00
NET CHANGES by Change Order		$0.00

The undersigned Contractor certifies that to the best of the Contractor's knowledge, information and belief the Work covered by this Application for Payment has been completed in accordance with the Contract Documents, that all amounts have been paid by the Contractor for Work for which previous Certificates for Payment were issued and payments received from the Owner, and that current payment shown herein is now due.

CONTRACTOR:

By: _____ Date: _____

State of:

County of:

Subscribed and sworn to before me this day of

Notary Public:

My Commission expires:

ARCHITECT'S CERTIFICATE FOR PAYMENT

In accordance with the Contract Documents, based on on-site observations and the data comprising this application, the Architect certifies to the Owner that to the best of the Architect's knowledge, information and belief the Work has progressed as indicated, the quality of the Work is in accordance with the Contract Documents, and the Contractor is entitled to payment of the AMOUNT CERTIFIED.

AMOUNT CERTIFIED $0.00

(Attach explanation if amount certified differs from the amount applied. Initial all figures on this Application and on the Continuation Sheet that are changed to conform with the amount certified.)

ARCHITECT:

By: _____ Date: _____

This Certificate is not negotiable. The AMOUNT CERTIFIED is payable only to the Contractor named herein. Issuance, payment and acceptance of payment are without prejudice to any rights of the Owner or Contractor under this Contract.

User Notes:

AIA® Document G703® – 1992

Continuation Sheet

AIA Document G702®, Application and Certification for Payment, or G732™, Application and Certificate for Payment, Construction Manager as Adviser Edition, containing Contractor's signed certification is attached.
Use Column I on Contracts where variable retainage for line items may apply.

APPLICATION NO:
APPLICATION DATE:
PERIOD TO:
ARCHITECT'S PROJECT NO:

A	B	C	D	E	F	G		H	I
ITEM NO.	DESCRIPTION OF WORK	SCHEDULED VALUE	WORK COMPLETED		MATERIALS PRESENTLY STORED (NOT IN D OR E)	TOTAL COMPLETED AND STORED TO DATE (D + E + F)	% (G÷C)	BALANCE TO FINISH (C - G)	RETAINAGE (IF VARIABLE RATE)
			FROM PREVIOUS APPLICATION (D + E)	THIS PERIOD					
		0.00	0.00	0.00	0.00	0.00	0.00%	0.00	0.00
		0.00	0.00	0.00	0.00	0.00	0.00%	0.00	0.00
		0.00	0.00	0.00	0.00	0.00	0.00%	0.00	0.00
		0.00	0.00	0.00	0.00	0.00	0.00%	0.00	0.00
		0.00	0.00	0.00	0.00	0.00	0.00%	0.00	0.00
		0.00	0.00	0.00	0.00	0.00	0.00%	0.00	0.00
		0.00	0.00	0.00	0.00	0.00	0.00%	0.00	0.00
		0.00	0.00	0.00	0.00	0.00	0.00%	0.00	0.00
		0.00	0.00	0.00	0.00	0.00	0.00%	0.00	0.00
		0.00	0.00	0.00	0.00	0.00	0.00%	0.00	0.00
		0.00	0.00	0.00	0.00	0.00	0.00%	0.00	0.00
		0.00	0.00	0.00	0.00	0.00	0.00%	0.00	0.00
		0.00	0.00	0.00	0.00	0.00	0.00%	0.00	0.00
		0.00	0.00	0.00	0.00	0.00	0.00%	0.00	0.00
		0.00	0.00	0.00	0.00	0.00	0.00%	0.00	0.00
		0.00	0.00	0.00	0.00	0.00	0.00%	0.00	0.00
		0.00	0.00	0.00	0.00	0.00	0.00%	0.00	0.00
		0.00	0.00	0.00	0.00	0.00	0.00%	0.00	0.00
		0.00	0.00	0.00	0.00	0.00	0.00%	0.00	0.00
		0.00	0.00	0.00	0.00	0.00	0.00%	0.00	0.00
	GRAND TOTAL	**$0.00**	**$0.00**	**$0.00**	**$0.00**	**$0.00**	**0.00%**	**$0.00**	**$0.00**

User Notes:

CONNECTICUT DEPARTMENT OF LABOR
WAGE AND WORKPLACE STANDARDS DIVISION

CONTRACTORS WAGE CERTIFICATION FORM

Construction Manager at Risk/General Contractor/Prime Contractor

I,_____of _____
Officer, Owner, Authorized Rep. Company Name

do hereby certify that the _____
Company Name

_____
Street

_____
City

and all of its subcontractors will pay all workers on the

_____
Project Name and Number

_____
Street and City

the wages as listed in the schedule of prevailing rates required for such project (a copy of which is attached hereto).

_____
Signed

Subscribed and sworn to before me this _____ day of _____,_____.

_____
Notary Public

Return to:

Connecticut Department of Labor
Wage & Workplace Standards Division
200 Folly Brook Blvd.
Wethersfield, CT 06109

Rate Schedule Issued (Date): _____

Minimum Rates and Classifications
for Building Construction

ID#: 22-39192

Connecticut Department of Labor
Wage and Workplace Standards

By virtue of the authority vested in the Labor Commissioner under provisions of Section 31-53 of the General Statutes of Connecticut, as amended, the following are declared to be the prevailing rates and welfare payments and will apply only where the contract is advertised for bid within 20 days of the date on which the rates are established. Any contractor or subcontractor not obligated by agreement to pay to the welfare and pension fund shall pay this amount to each employee as part of his/her hourly wages.

Project Number:
Project Town: Colchester
State#:
FAP#:
Project: New Colchester Senior Center

CLASSIFICATION	Hourly Rate	Benefits
1b) Asbestos/Toxic Waste Removal Laborers: Asbestos removal and encapsulation (except its removal from mechanical systems which are not to be scrapped), toxic waste removers, blasters.**See Laborers Group 7**		
1c) Asbestos Worker/Heat and Frost Insulator	44.57	31.79
2) Boilermaker	44.46	28.51
3a) Bricklayer, Cement Mason, Concrete Finisher (including caulking), Stone Masons	37.75	34.62 + a
3b) Tile Setter	37.1	30.52
3c) Tile and Stone Finishers	30.0	25.30
3d) Marble & Terrazzo Finishers	31.07	24.23
3e) Plasterer	41.9	28.75

------LABORERS------

4) Group 1: Laborers (common or general), acetylene burners, concrete specialists, wrecking laborers, fire watchers.	32.0	24.40
4a) Group 2: Mortar mixers, plaster tender, power buggy operators, powdermen, fireproofer/mixer/nozzleman (Person running mixer and spraying fireproof only).	32.25	24.40
4b) Group 3: Jackhammer operators/pavement breaker, mason tender (brick), mason tender (cement/concrete), forklift operators and forklift operators (masonry).	32.5	24.40
4c) **Group 4: Pipelayers (Installation of water, storm drainage or sewage lines outside of the building line with P6, P7 license) (the pipelayer rate shall apply only to one or two employees of the total crew who primary task is to actually perform the mating of pipe sections) P6 and P7 rate is $26.80.	33.0	24.40
4d) Group 5: Air track operator, sand blaster and hydraulic drills.	32.75	24.40
4e) Group 6: Blasters, nuclear and toxic waste removal.	35.0	24.40
4f) Group 7: Asbestos/lead removal and encapsulation (except it's removal from mechanical systems which are not to be scrapped).	33.0	24.40
4g) Group 8: Bottom men on open air caisson, cylindrical work and boring crew.	30.28	24.40
4h) Group 9: Top men on open air caisson, cylindrical work and boring crew.	29.74	24.40
4i) Group 10: Traffic Control Signalman	18.0	24.40
5) Carpenter, Acoustical Ceiling Installation, Soft Floor/Carpet Laying, Metal Stud Installation, Form Work and Scaffold Building, Drywall Hanging, Modular-Furniture Systems Installers, Lathers, Piledrivers, Resilient Floor Layers.	36.07	26.15
5a) Millwrights	36.32	26.81

6) Electrical Worker (including low voltage wiring) (Trade License required: E1,2 L-5,6 C-5,6 T-1,2 L-1,2 V-1,2,7,8,9)	41.75	31.47+3% of gross wage
7a) Elevator Mechanic (Trade License required: R-1,2,5,6)	58.9	36.885+a+b
-----LINE CONSTRUCTION----		
Groundman	26.5	6.5% + 9.00
Linemen/Cable Splicer	48.19	6.5% + 22.00
8) Glazier (Trade License required: FG-1,2)	40.78	23.40 + a
9) Ironworker, Ornamental, Reinforcing, Structural, and Precast Concrete Erection	39.7	38.77 + a
----OPERATORS----		
Group 1: Crane Handling or Erecting Structural Steel or Stone; Hoisting Engineer (2 drums or over). (Trade License Required)	50.27	26.80 + a
Group 1a: Front End Loader (7 cubic yards or over); Work Boat 26 ft. and Over	46.07	26.80 + a
Group 2: Cranes (100 ton rate capacity and over); Bauer Drill/Caisson. (Trade License Required)	49.91	26.80 + a
Group 2a: Cranes (under 100 ton rated capacity).	49.06	26.80 + a
Group 2b: Excavator over 2 cubic yards; Pile Driver ($3.00 premium when operator controls hammer)	45.71	26.80 + a
Group 3: Excavator; Gradall; Master Mechanic; Hoisting Engineer (all types of equipment where a drum and cable are used to hoist or drag material regardless of motive power of operation), Rubber Tire Excavator (Drott-1085 or similar);Grader Operator; Bulldozer Finegrade. (slopes, shaping, laser or GPS, etc.). (Trade License	44.86	26.80 + a

Required)

Group 4: Trenching Machines; Lighter Derrick; CMI Machine or Similar; Koehring Loader (Skooper); Goldhofer.	44.42	26.80 + a
Group 5: Specialty Railroad Equipment; Asphalt Spreader, Asphalt Reclaiming Machine; Line Grinder; Concrete Pumps; Drills with Self Contained Power Units; Boring Machine; Post Hole Digger; Auger; Pounder; Well Digger; Milling Machine (over 24 mandrel).	43.73	26.80 + a
Group 5 continued: Side Boom; Combination Hoe and Loader; Directional Driller.	43.73	26.80 + a
Group 6: Front End Loader (3 up to 7 cubic yards); Bulldozer (rough grade dozer).	43.38	26.80 + a
Group 7: Asphalt Roller; Concrete Saws and Cutters (ride on types); Vermeer Concrete Cutter; Stump Grinder; Scraper; Snooper; Skidder; Milling Machine (24" and under mandrel).	42.99	26.80 + a
Group 8: Mechanic; Grease Truck Operator; Hydroblaster; Barrier Mover; Power Stone Spreader; Welding; Work Boat Under 26 ft.; Transfer Machine; Rigger Foreman.	42.54	26.80 + a
Group 9: Front End Loader (under 3 cubic yards); Skid Steer Loader regardless of attachments; (Bobcat or Similar); Forklift, Power Chipper; Landscape Equipment (including Hydroseeder); Vacuum Excavation Truck and Hydrovac Excavation Truck (27 HG pressure or greater).	42.04	26.80 + a
Group 10: Vibratory hammer; ice machine; diesel and air, hammer, etc.	39.7	26.80 + a
Group 11: Conveyor, earth roller, power pavement breaker (whiphammer), robot demolition equipment.	39.7	26.80 + a
Group 12: Wellpoint Operator.	39.63	26.80 + a
Group 13: Compressor Battery Operator.	38.97	26.80 + a

Group 14: Elevator Operator; Tow Motor Operator (solid tire no rough terrain).	37.66	26.80 + a
Group 15: Generator Operator; Compressor Operator; Pump Operator; Welding Machine Operator; Heater Operator.	37.2	26.80 + a
Group 16: Maintenance Engineer.	36.46	26.80 + a
Group 17: Portable Asphalt Plant Operator; Portable Crusher Plant Operator; Portable Concrete Plant Operator; Portable Grout Plant Operator; Portable Water Filtration Plant Operator.	41.39	26.80 + a
Group 18: Power Safety Boat; Vacuum Truck; Zim Mixer; Sweeper; (Minimum for any job requiring a CDL license); Rigger; Signalman.	38.61	26.80 + a

------PAINTERS (Including Drywall Finishing)------

10a) Brush and Roller	37.22	23.40
10b) Taping Only/Drywall Finishing	37.97	23.40
10c) Paperhanger and Red Label	37.72	23.40
10e) Blast and Spray	40.22	23.40
11) Plumber (excluding HVAC pipe installation) (Trade License required: P-1,2,6,7,8,9 J-1,2,3,4 SP-1,2)	47.03	34.05
12) Well Digger, Pile Testing Machine	37.26	24.05 + a
13) Roofer (composition)	40.1	23.40
14) Roofer (slate & tile)	40.6	23.40

15) Sheetmetal Worker (Trade License required for HVAC and Ductwork: SM-1,SM-2,SM-3,SM-4,SM-5,SM-6)	40.89	41.72
16) Pipefitter (Including HVAC work) (Trade License required: S-1,2,3,4,5,6,7,8 B-1,2,3,4 D-1,2,3,4, G-1, G-2, G-8 & G-9)	47.03	34.05
------TRUCK DRIVERS------		
17a) 2 Axle, Helpers	31.16	28.78 + a
17b) 3 Axle, 2 Axle Ready Mix	31.27	28.78 + a
17c) 3 Axle Ready Mix	31.33	28.78 + a
17d) 4 Axle	31.39	28.78 + a
17e) 4 Axle Ready Mix	31.44	28.78 + a
17f) Heavy Duty Trailer (40 Tons and Over)	33.66	28.78 + a
17g) Specialized Earth Moving Equipment (Other Than Conventional Type on-the-Road Trucks and Semi-Trailers, Including Euclids)	31.44	28.78 + a
17h) Heavy Duty Trailer up to 40 tons	32.39	28.78 + a
17i) Snorkle Truck	31.54	28.78 + a
18) Sprinkler Fitter (Trade License required: F-1,2,3,4)	47.55	28.96 + a
19) Theatrical Stage Journeyman	25.76	7.34

Welders: Rate for craft to which welding is incidental.

**Note: Hazardous waste removal work receives additional $1.25 per hour for truck drivers.*

***Note: Hazardous waste premium $3.00 per hour over classified rate*

Crane with 150 ft. boom (including jib) - $1.50 extra

Crane with 200 ft. boom (including jib) - $2.50 extra

Crane with 250 ft. boom (including jib) - $5.00 extra

Crane with 300 ft. boom (including jib) - $7.00 extra

Crane with 400 ft. boom (including jib) - $10.00 extra

All classifications that indicate a percentage of the fringe benefits must be calculated at the percentage rate times the "base hourly rate".

Apprentices duly registered under the Commissioner of Labor's regulations on "Work Training Standards for Apprenticeship and Training Programs" Section 31-51-d-1 to 12, are allowed to be paid the appropriate percentage of the prevailing journeymen hourly base and the full fringe benefit rate, providing the work site ratio shall not be less than one full-time journeyperson instructing and supervising the work of each apprentice in a specific trade.

The Prevailing wage rates applicable to this project are subject to annual adjustments each July 1st for the duration of the project.

Each contractor shall pay the annual adjusted prevailing wage rate that is in effect each July 1st, as posted by the Department of Labor.

It is the contractor's responsibility to obtain the annual adjusted prevailing wage rate increases directly from the Department of Labor's website.

The annual adjustments will be posted on the Department of Labor's Web page: www.ct.gov/dol. For those without internet access, please contact the division listed below.

The Department of Labor will continue to issue the initial prevailing wage rate schedule to the Contracting Agency for the project.

All subsequent annual adjustments will be posted on our Web Site for contractor access.

Contracting Agencies are under no obligation pursuant to State labor law to pay any increase due to the annual adjustment provision.

Effective October 1, 2005 - Public Act 05-50: any person performing the work of any mechanic, laborer, or worker shall be paid prevailing wage

All Person who perform work ON SITE must be paid prevailing wage for the appropriate mechanic, laborer, or worker classification.

All certified payrolls must list the hours worked and wages paid to All Persons who perform work ON SITE regardless of their ownership i.e.: (Owners, Corporate Officers, LLC Members, Independent Contractors, et. al)

Reporting and payment of wages is required regardless of any contractual relationship alleged to exist between the contractor and such person.

~~Unlisted classifications needed for work not included within the scope of the classifications listed may be added after award only as provided in the labor standards contract clause (29 CFR 5.5 (a) (1) (ii)).

Please direct any questions which you may have pertaining to classification of work and payment of prevailing wages to the Wage and Workplace Standards Division, telephone (860)263-6790.

As of: September 9, 2022

Important Information:

For use with Building, Heavy/Highway, and Residential

Welders: Rate for craft to which welding is incidental.

*Note: Hazardous waste removal work receives additional $1.25 per hour for truck drivers.

**Note: Hazardous waste premium $3.00 per hour over classified rate.

ALL Cranes: When crane operator is operating equipment that requires a fully licensed crane operator to operate he receives an extra $4.00 premium in addition to the hourly wage rate and benefit contributions:

1) Crane handling or erecting structural steel or stone; hoisting engineer (2 drums or over)
2) Cranes (100 ton rate capacity and over) Bauer Drill/Caisson
3) Cranes (under 100 ton rated capacity)

Crane with boom including jib, 150 feet - $1.50 extra.

Crane with boom including jib, 200 feet - $2.50 extra.

Crane with boom including jib, 250 feet - $5.00 extra.

Crane with boom including jib, 300 feet - $7.00 extra.

Crane with boom including jib, 400 feet - $10.00 extra.

All classifications that indicate a percentage of the fringe benefits must be calculated at the percentage rate times the "base hourly rate".

- Apprentices duly registered under the Commissioner of Labor's regulations on "Work Training Standards for Apprenticeship and Training Programs" Section 31-51-d-1 to 12, are allowed to be paid the appropriate percentage of the prevailing journeymen hourly base and the full fringe benefit rate, providing the work site ratio shall not be less than one full-time journeyperson instructing and supervising the work of one apprentice in a specific trade.

Connecticut General Statute Section 31-55a: Annual Adjustments to wage rates by contractors doing state work

- The Prevailing wage rates applicable to this project are subject to annual adjustments each July 1st for the duration of the project.
- Each contractor shall pay the annual adjusted prevailing wage rate that is in effect each July 1st, as posted by the Department of Labor.
- It is the contractor's responsibility to obtain the annual adjusted prevailing wage rate increases directly from the Department of Labor's website.
- The annual adjustments will be posted on the Department of Labor's Web page: www.ctdol.state.ct.us.
- The Department of Labor will continue to issue the initial prevailing wage rate schedule to the Contracting Agency for the project.
- All subsequent annual adjustments will be posted on our Web Site for contractor access.

Effective October 1, 2005 - Public Act 05-50: any person performing the work of any mechanic, laborer, or worker shall be paid prevailing wage.

- All Persons who perform work ON SITE must be paid prevailing wage for the appropriate mechanic, laborer, or worker classification.
- All certified payrolls must list the hours worked and wages paid to All Persons who perform work ON SITE regardless of their ownership i.e.: (Owners, Corporate Officers, LLC Members, Independent Contractors, et. al)
- Reporting and payment of wages is required regardless of any contractual relationship alleged to exist between the contractor and such person.

Unlisted classifications needed for work not included within the scope of the classifications listed may be added after award only as provided in the labor standards contract clause (29 CFR 5.5 (a) (1) (ii)).

Please direct any questions which you may have pertaining to classification of work and payment of prevailing wages to the Wage and Workplace Standards Division, telephone (860)263-6790.

Connecticut Department of Labor
Wage and Workplace Standards Division
FOOTNOTES

⇨ Please Note: If the "Benefits" listed on the schedule for the following occupations includes a letter(s) (+ a or + a+b for instance), refer to the information below.

Benefits to be paid at the appropriate prevailing wage rate for the listed occupation.

If the "Benefits" section for the occupation lists only a dollar amount, disregard the information below.

Bricklayers, Cement Masons, Cement Finishers, Concrete Finishers, Stone Masons
(Building Construction) and
(Residential- Hartford, Middlesex, New Haven, New London and Tolland Counties)

a. Paid Holiday: Employees shall receive 4 hours for Christmas Eve holiday provided the employee works the regularly scheduled day before and after the holiday. Employers may schedule work on Christmas Eve and employees shall receive pay for actual hours worked in addition to holiday pay.

Elevator Constructors: Mechanics

a. Paid Holidays: New Year's Day, Memorial Day, Independence Day, Labor Day, Veterans' Day, Thanksgiving Day, Christmas Day, plus the Friday after Thanksgiving.

b. Vacation: Employer contributes 8% of basic hourly rate for 5 years or more of service or 6% of basic hourly rate for 6 months to 5 years of service as vacation pay credit.

Glaziers

a. Paid Holidays: Labor Day and Christmas Day.

Power Equipment Operators
(Heavy and Highway Construction & Building Construction)

a. Paid Holidays: New Year's Day, Good Friday, Memorial day, Independence Day, Labor Day, Thanksgiving Day and Christmas Day, provided the employee works 3 days during the week in which the holiday falls, if scheduled, and if scheduled, the working day before and the working day after the holiday. Holidays falling on Saturday may be observed on Saturday, or if the employer so elects, on the preceding Friday.

Ironworkers

a. Paid Holiday: Labor Day provided employee has been on the payroll for the 5 consecutive work days prior to Labor Day.

Laborers (Tunnel Construction)

a. Paid Holidays: New Year's Day, Memorial Day, Independence Day, Labor Day, Thanksgiving Day and Christmas Day. No employee shall be eligible for holiday pay when he fails, without cause, to work the regular work day preceding the holiday or the regular work day following the holiday.

Roofers

a. Paid Holidays: July 4th, Labor Day, and Christmas Day provided the employee is employed 15 days prior to the holiday.

Sprinkler Fitters

a. Paid Holidays: Memorial Day, July 4th, Labor Day, Thanksgiving Day and Christmas Day, provided the employee has been in the employment of a contractor 20 working days prior to any such paid holiday.

Truck Drivers

(Heavy and Highway Construction & Building Construction)

a. Paid Holidays: New Year's Day, Memorial Day, Independence Day, Labor Day, Thanksgiving Day, Christmas day, and Good Friday, provided the employee has at least 31 calendar days of service and works the last scheduled day before and the first scheduled day after the holiday, unless excused.

STATUTE 31-55a

- SPECIAL NOTICE –

To All State and Political Subdivisions,Their Agents, and Contractors Connecticut General Statute 31-55a - Annual adjustments to wage rates by contractors doing state work.

Each contractor that is awarded a contract on or after October 1, 2002, for (1) the construction of a state highway or bridge that falls under the provisions of section 31-54 of the general statutes, or (2) the construction, remodeling, refinishing, refurbishing, rehabilitation, alteration or repair of any public works project that falls under the provisions of section 31-53 of the general statutes shall contact the Labor Commissioner on or before July first of each year, for the duration of such contract, to ascertain the prevailing rate of wages on an hourly basis and the amount of payment or contributions paid or payable on behalf of each mechanic, laborer or worker employed upon the work contracted to be done, and shall make any necessary adjustments to such prevailing rate of wages and such payment or contributions paid or payable on behalf of each such employee, effective each July first.

- The prevailing wage rates applicable to any contract or subcontract awarded on or after October 1, 2002 are subject to annual adjustments each July 1st for the duration of any project which was originally advertised for bids on or after October 1, 2002.
- Each contractor affected by the above requirement shall pay the annual adjusted prevailing wage rate that is in effect each July 1st, as posted by the Department of Labor.
- It is the ***contractor's*** responsibility to obtain the annual adjusted prevailing wage rate increases directly from the Department of Labor's Web Site. The annual adjustments will be posted on the Department of Labor Web page: www.ctdol.state.ct.us. For those without internet access, please contact the division listed below.
- The Department of Labor will continue to issue the initial prevailing wage rate schedule to the Contracting Agency for the project. All subsequent annual adjustments will be posted on our Web Site for contractor access.

Any questions should be directed to the Contract Compliance Unit, Wage and Workplace Standards Division, Connecticut Department of Labor, 200 Folly Brook Blvd., Wethersfield, CT 06109 at (860)263-6790.

Information Bulletin
Occupational Classifications

The Connecticut Department of Labor has the responsibility to properly determine *"job classification"* on prevailing wage projects covered under C.G.S. Section 31-53(d).

Note: This information is intended to provide a sample of some occupational classifications for guidance purposes only. It is not an all-inclusive list of each occupation's duties. This list is being provided only to highlight some areas where a contractor may be unclear regarding the proper classification. If unsure, the employer should seek guidelines for CTDOL.

Below are additional clarifications of specific job duties performed for certain classifications:

- ***ASBESTOS WORKERS***

Applies all insulating materials, protective coverings, coatings and finishes to all types of mechanical systems.

- ***ASBESTOS INSULATOR***

Handle, install apply, fabricate, distribute, prepare, alter, repair, dismantle, heat and frost insulation, including penetration and fire stopping work on all penetration fire stop systems.

- ***BOILERMAKERS***

Erects hydro plants, incomplete vessels, steel stacks, storage tanks for water, fuel, etc. Builds incomplete boilers, repairs heat exchanges and steam generators.

- ***BRICKLAYERS, CEMENT MASONS, CEMENT FINISHERS, MARBLE MASONS, PLASTERERS, STONE MASONS, PLASTERERS. STONE MASONS, TERRAZZO WORKERS, TILE SETTERS***

Lays building materials such as brick, structural tile and concrete cinder, glass, gypsum, terra cotta block. Cuts, tools and sets marble, sets stone, finishes concrete, applies decorative steel, aluminum and plastic tile, applies cements, sand, pigment and marble chips to floors, stairways, etc.

- ***CARPENTERS, MILLWRIGHTS. PILEDRIVERMEN. LATHERS. RESILEINT FLOOR LAYERS, DOCK BUILDERS, DIKERS, DIVER TENDERS***

Constructs, erects, installs and repairs structures and fixtures of wood, plywood and wallboard. Installs, assembles, dismantles, moves industrial machinery. Drives piling into ground to provide foundations for structures such as buildings and bridges, retaining walls for earth embankments, such as cofferdams. Fastens wooden, metal or rockboard lath to walls, ceilings and partitions of buildings, acoustical tile layer, concrete form builder. Applies firestopping materials on fire resistive joint systems only. Installation of curtain/window walls only where attached to wood or metal studs. Installation of insulated material of all types whether blown, nailed or attached in other ways to walls, ceilings and floors of buildings. Assembly and installation of modular furniture/furniture systems. Free-standing furniture is not covered. This includes free standing: student chairs, study top desks, book box desks, computer furniture, dictionary stand, atlas stand, wood shelving, two-position information access station, file cabinets, storage cabinets, tables, etc.

- **LABORER, CLEANING**

• The clean up of any construction debris and the general (heavy/light) cleaning, including sweeping, wash down, mopping, wiping of the construction facility and its furniture, washing, polishing, and dusting.

- **DELIVERY PERSONNEL**

• If delivery of supplies/building materials is to one common point and stockpiled there, prevailing wages <u>are not required</u>. If the delivery personnel are involved in the distribution of the material to multiple locations within the construction site then they would have to be paid prevailing wages for the type of work performed: laborer, equipment operator, electrician, ironworker, plumber, etc.

• An example of this would be where delivery of drywall is made to a building and the delivery personnel distribute the drywall from one "stockpile" location to further sub-locations on each floor. Distribution of material around a construction site is the job of a laborer or tradesman, and not a delivery personnel.

- ***ELECTRICIANS***

Install, erect, maintenance, alteration or repair of any wire, cable, conduit, etc., which generates, transforms, transmits or uses electrical energy for light, heat, power or other purposes, including the Installation or maintenance of telecommunication, LAN wiring or computer equipment, and low voltage wiring. ****License required per Connecticut General Statutes: E-1,2 L-5,6 C-5,6 T-1,2 L-1,2 V-1,2,7,8,9.***

- ***ELEVATOR CONSTRUCTORS***

Install, erect, maintenance and repair of all types of elevators, escalators, dumb waiters and moving walks. ***License required by Connecticut General Statutes: R-1,2,5,6.***

- ***FORK LIFT OPERATOR***

Laborers Group 4) Mason Tenders - operates forklift solely to assist a mason to a maximum height of nine (9) feet only.

Power Equipment Operator Group 9 - operates forklift to assist any trade, and to assist a mason to a height over nine (9) feet.

- ***GLAZIERS***

Glazing wood and metal sash, doors, partitions, and 2 story aluminum storefronts. Installs glass windows, skylights, store fronts and display cases or surfaces such as building fronts, interior walls, ceilings and table tops and metal store fronts. Installation of aluminum window walls and curtain walls is the "joint" work of glaziers and ironworkers, which require equal composite workforce.

- ***IRONWORKERS***

Erection, installation and placement of structural steel, precast concrete, miscellaneous iron, ornamental iron, metal curtain wall, rigging and reinforcing steel. Handling, sorting, and installation of reinforcing steel (rebar). Metal bridge rail (traffic), metal bridge handrail, and decorative security fence installation. Installation of aluminum window walls and curtain walls is the "joint" work of glaziers and ironworkers which require equal composite workforce.

- ***INSULATOR***

• Installing fire stopping systems/materials for "Penetration Firestop Systems": transit to cables, electrical conduits, insulated pipes, sprinkler pipe penetrations, ductwork behind radiation, electrical cable trays, fire rated pipe penetrations, natural polypropylene, HVAC ducts, plumbing bare metal, telephone and communication wires, and boiler room ceilings.

- ***LABORERS***

Acetylene burners, asphalt rakers, chain saw operators, concrete and power buggy operator, concrete saw operator, fence and guard rail erector (except metal bridge rail (traffic), decorative security fence (non-metal).

installation.), hand operated concrete vibrator operator, mason tenders, pipelayers (installation of storm drainage or sewage lines on the street only), pneumatic drill operator, pneumatic gas and electric drill operator, powermen and wagon drill operator, air track operator, block paver, curb setters, blasters, concrete spreaders.

- ***PAINTERS***

Maintenance, preparation, cleaning, blasting (water and sand, etc.), painting or application of any protective coatings of every description on all bridges and appurtenances of highways, roadways, and railroads. Painting, decorating, hardwood finishing, paper hanging, sign writing, scenic art work and drywall hhg for any and all types of building and residential work.

- ***LEAD PAINT REMOVAL***

• Painter's Rate

1. Removal of lead paint from bridges.
2. Removal of lead paint as preparation of any surface to be repainted.
3. Where removal is on a Demolition project prior to reconstruction.

• Laborer's Rate

1. Removal of lead paint from any surface NOT to be repainted.
2. Where removal is on a *TOTAL* Demolition project only.

- ***PLUMBERS AND PIPEFITTERS***

Installation, repair, replacement, alteration or maintenance of all plumbing, heating, cooling and piping. ****License required per Connecticut General Statutes: P-1,2,6,7,8,9 J-1,2,3,4 SP-1,2 S-1,2,3,4,5,6,7,8 B-1,2,3,4 D-1,2,3,4.***

- ***POWER EQUIPMENT OPERATORS***

Operates several types of power construction equipment such as compressors, pumps, hoists, derricks, cranes, shovels, tractors, scrapers or motor graders, etc. Repairs and maintains equipment. ****License required, crane operators only, per Connecticut General Statutes.***

- ***ROOFERS***

Covers roofs with composition shingles or sheets, wood shingles, slate or asphalt and gravel to waterproof roofs, including preparation of surface. (demolition or removal of any type of roofing and or clean-up of any and all areas where a roof is to be relaid.)

- ***SHEETMETAL WORKERS***

Fabricate, assembles, installs and repairs sheetmetal products and equipment in such areas as ventilation, air-conditioning, warm air heating, restaurant equipment, architectural sheet metal work, sheetmetal roofing, and aluminum gutters. Fabrication, handling, assembling, erecting, altering, repairing, etc. of coated metal material panels and composite metal material panels when used on building exteriors and interiors as soffits, facia, louvers, partitions, canopies, cornice, column covers, awnings, beam covers, cladding, sun shades, lighting troughs, spires, ornamental roofing, metal ceilings, mansards, copings, ornamental and ventilation hoods, vertical and horizontal siding panels, trim, etc. The sheet metal classification also applies to the vast variety of coated metal material panels and composite metal material panels that have evolved over the years as an alternative to conventional ferrous and non-ferrous metals like steel, iron, tin, copper, brass, bronze, aluminum, etc. Fabrication, handling, assembling, erecting, altering, repairing, etc. of architectural metal roof, standing seam roof, composite metal roof, metal and composite bathroom/toilet partitions, aluminum gutters, metal and composite lockers and shelving, kitchen equipment, and walk-in coolers. To include testing and air –balancing ancillary to installation and construction.

- ***SPRINKLER FITTERS***

Installation, alteration, maintenance and repair of fire protection sprinkler systems. ***License required per Connecticut General Statutes: F-1,2,3,4.***

- ***TILE MARBLE AND TERRAZZO FINISHERS***

Assists and tends the tile setter, marble mason and terrazzo worker in the performance of their duties.

- **TRUCK DRIVERS**

~How to pay truck drivers delivering asphalt is under REVISION~

Truck Drivers are requires to be paid prevailing wage for time spent "working" directly on the site. These drivers remain covered by the prevailing wage for any time spent transporting between the actual construction location and facilities (such as fabrication, plants, mobile factories, batch plant, borrow pits, job headquarters, tool yards, etc.) dedicated exclusively, or nearly so, to performance of the contract or project, which are so located in proximity to the actual construction location that it is reasonable to include them. ***License required, drivers only, per Connecticut General Statutes.***

For example:

• Material men and deliverymen are not covered under prevailing wage as long as they are not directly involved in the construction process. If, they unload the material, they would then be covered by prevailing wage for the classification they are performing work in: laborer, equipment operator, etc.
• Hauling material off site is not covered provided they are not dumping it at a location outlined above.
• Driving a truck on site and moving equipment or materials on site would be considered covered work, as this is part of the construction process.

➢ *Any questions regarding the proper classification should be directed to:*

Public Contract Compliance Unit
Wage and Workplace Standards Division
Connecticut Department of Labor
200 Folly Brook Blvd, Wethersfield, CT 06109
(860) 263-6543.

Sec. 31-53b. Construction safety and health course. New miner training program. Proof of completion required for mechanics, laborers and workers on public works projects. Enforcement. Regulations. Exceptions. (a) Each contract for a public works project entered into on or after July 1, 2009, by the state or any of its agents, or by any political subdivision of the state or any of its agents, described in subsection (g) of section 31-53, shall contain a provision requiring that each contractor furnish proof with the weekly certified payroll form for the first week each employee begins work on such project that any person performing the work of a mechanic, laborer or worker pursuant to the classifications of labor under section 31-53 on such public works project, pursuant to such contract, has completed a course of at least ten hours in duration in construction safety and health approved by the federal Occupational Safety and Health Administration or, has completed a new miner training program approved by the Federal Mine Safety and Health Administration in accordance with 30 CFR 48 or, in the case of telecommunications employees, has completed at least ten hours of training in accordance with 29 CFR 1910.268.

(b) Any person required to complete a course or program under subsection (a) of this section who has not completed the course or program shall be subject to removal from the worksite if the person does not provide documentation of having completed such course or program by the fifteenth day after the date the person is found to be in noncompliance. The Labor Commissioner or said commissioner's designee shall enforce this section.

(c) Not later than January 1, 2009, the Labor Commissioner shall adopt regulations, in accordance with the provisions of chapter 54, to implement the provisions of subsections (a) and (b) of this section. Such regulations shall require that the ten-hour construction safety and health courses required under subsection (a) of this section be conducted in accordance with federal Occupational Safety and Health Administration Training Institute standards, or in accordance with Federal Mine Safety and Health Administration Standards or in accordance with 29 CFR 1910.268, as appropriate. The Labor Commissioner shall accept as sufficient proof of compliance with the provisions of subsection (a) or (b) of this section a student course completion card issued by the federal Occupational Safety and Health Administration Training Institute, or such other proof of compliance said commissioner deems appropriate, dated no earlier than five years before the commencement date of such public works project.

(d) This section shall not apply to employees of public service companies, as defined in section 16-1, or drivers of commercial motor vehicles driving the vehicle on the public works project and delivering or picking up cargo from public works projects provided they perform no labor relating to the project other than the loading and unloading of their cargo.

(P.A. 06-175, S. 1; P.A. 08-83, S. 1.)

History: P.A. 08-83 amended Subsec. (a) by making provisions applicable to public works project contracts entered into on or after July 1, 2009, replacing provision re total cost of work with reference to Sec. 31-53(g), requiring proof in certified payroll form that new mechanic, laborer or worker has completed a 10-hour or more construction safety course and adding provision re new miner training program, amended Subsec. (b) by substituting "person" for "employee" and adding "or program", amended Subsec. (c) by adding "or in accordance with Federal Mine
Safety and Health Administration Standards" and setting new deadline of January 1, 2009, deleted former Subsec. (d) re "public building", added new Subsec. (d) re exemptions for public service company employees and delivery drivers who perform no labor other than delivery and made conforming and technical changes, effective January 1, 2009.

Opportunity ★ Guidance ★ Support

CONNECTICUT DEPARTMENT OF LABOR

THIS IS A PUBLIC WORKS PROJECT

Covered by the

PREVAILING WAGE LAW

CT General Statutes Section 31-53

If you have QUESTIONS regarding your wages
CALL (860) 263-6790

Section 31-55 of the CT State Statutes requires every contractor or subcontractor performing work for the state to post in a prominent place the prevailing wages as determined by the Labor Commissioner.

Informational Bulletin

THE 10-HOUR OSHA CONSTRUCTION SAFETY AND HEALTH COURSE

(applicable to public building contracts entered into *on or after July 1, 2007,* where the total cost of all work to be performed is at least $100,000)

(1) This requirement was created by Public Act No. 06-175, which is codified in Section 31-53b of the Connecticut General Statutes (pertaining to the prevailing wage statutes);

(2) The course is required for public building construction contracts (projects funded in whole or in part by the state or any political subdivision of the state) entered into on or after July 1, 2007;

(3) It is required of private employees (not state or municipal employees) and apprentices who perform manual labor for a general contractor or subcontractor on a public building project where the total cost of all work to be performed is at least $100,000;

(4) The ten-hour construction course pertains to the ten-hour Outreach Course conducted in accordance with federal OSHA Training Institute standards, and, for telecommunications workers, a ten-hour training course conducted in accordance with federal OSHA standard, 29 CFR 1910.268;

(5) The internet website for the federal OSHA Training Institute is http://www.osha.gov/fso/ote/training/edcenters/fact_sheet.html;

(6) The statutory language leaves it to the contractor and its employees to determine who pays for the cost of the ten-hour Outreach Course;

(7) Within 30 days of receiving a contract award, a general contractor must furnish proof to the Labor Commissioner that all employees and apprentices performing manual labor on the project will have completed such a course;

(8) Proof of completion may be demonstrated through either: (a) the presentation of a *bona fide* student course completion card issued by the federal OSHA Training Institute; *or* (2) the presentation of documentation provided to an employee by a trainer certified by the Institute pending the actual issuance of the completion card;

(9) Any card with an issuance date more than 5 years prior to the commencement date of the construction project shall not constitute proof of compliance;

(10) Each employer shall affix a copy of the construction safety course completion card to the certified payroll submitted to the contracting agency in accordance with Conn. Gen. Stat. § 31-53(f) on which such employee's name first appears;

(11) Any employee found to be in non-compliance shall be subject to removal from the worksite if such employee does not provide satisfactory proof of course completion to the Labor Commissioner by the fifteenth day after the date the employee is determined to be in noncompliance;

(12) Any such employee who is determined to be in noncompliance may continue to work on a public building construction project for a maximum of fourteen consecutive calendar days while bringing his or her status into compliance;

(13) The Labor Commissioner may make complaint to the prosecuting authorities regarding any employer or agent of the employer, or officer or agent of the corporation who files a false certified payroll with respect to the status of an employee who is performing manual labor on a public building construction project;

(14) The statute provides the minimum standards required for the completion of a safety course by manual laborers on public construction contracts; any contractor can exceed these minimum requirements; and

(15) Regulations clarifying the statute are currently in the regulatory process, and shall be posted on the CTDOL website as soon as they are adopted in final form.

(16) Any questions regarding this statute may be directed to the Wage and Workplace Standards Division of the Connecticut Labor Department via the internet website of http://www.ctdol.state.ct.us/wgwkstnd/wgemenu.htm; or by telephone at (860)263-6790.

THE ABOVE INFORMATION IS PROVIDED EXCLUSIVELY AS AN EDUCATIONAL RESOURCE, AND IS NOT INTENDED AS A SUBSTITUTE FOR LEGAL INTERPRETATIONS WHICH MAY ULTMATELY ARISE CONCERNIG THE CONSTRUCTION OF THE STATUTE OR THE REGULATIONS.

November 29, 2006

Notice

To All Mason Contractors and Interested Parties Regarding Construction Pursuant to Section 31-53 of the Connecticut General Statutes (Prevailing Wage)

The Connecticut Labor Department Wage and Workplace Standards Division is empowered to enforce the prevailing wage rates on projects covered by the above referenced statute.

Over the past few years the Division has withheld enforcement of the rate in effect for workers who operate a forklift on a prevailing wage rate project due to a potential jurisdictional dispute.

The rate listed in the schedules and in our Occupational Bulletin (see enclosed) has been as follows:

Forklift Operator:

- **Laborers (Group 4) Mason Tenders -** operates forklift solely to assist a mason to a maximum height of nine feet only.

- **Power Equipment Operator (Group 9) -** operates forklift to assist any trade and to assist a mason to a height over nine feet.

The U.S. Labor Department conducted a survey of rates in Connecticut but it has not been published and the rate in effect remains as outlined in the above Occupational Bulletin.

Since this is a classification matter and not one of jurisdiction, effective January 1, 2007 the Connecticut Labor Department will enforce the rate on each schedule in accordance with our statutory authority.

Your cooperation in filing appropriate and accurate certified payrolls is appreciated.

NOTICE

TO ALL CONTRACTING AGENCIES

Please be advised that Connecticut General Statutes Section 31-53, requires the contracting agency to certify to the Department of Labor, the total dollar amount of work to be done in connection with such public works project, regardless of whether such project consists of one or more contracts.

Please find the attached "Contracting Agency Certification Form" to be completed and returned to the Department of Labor, Wage and Workplace Standards Division, Public Contract Compliance Unit.

Inquiries can be directed to 860.263.6790.

CONNECTICUT DEPARTMENT OF LABOR
WAGE AND WORKPLACE STANDARDS DIVISION

Contracting Agency Certification Form

I,_____, acting in my official capacity as _____,
Authorized Representative Title

for _____, located at _____,
Contracting Agency Address

do hereby certify that the total dollar amount of work to be done in connection with

_____, located at _____,
Project name and number Address

shall be $_____, which includes all work, regardless of whether such project contains of one or more contracts.

Contractor Information

Name: _____

Address: _____

Authorized Representative: _____

Approximate Starting Date: _____

Approximate Completion Date: _____

_____ _____
Signature Date

Return to:

Connecticut Department of Labor
Wage & Workplace Standards Division
200 Folly Brook Blvd.
Wethersfield, CT 06109

Rate Schedule Issued (Date): _____

[New] In accordance with Section 31-53b(a) of the C.G.S. each contractor shall provide a copy of the OSHA 10 Hour Construction Safety and Health Card for each employee, to be attached to the first certified payroll on the project.

In accordance with Connecticut General Statutes, 31-53
Certified Payrolls with a statement of compliance
shall be submitted monthly to the contracting agency.

PAYROLL CERTIFICATION FOR PUBLIC WORKS PROJECTS

WEEKLY PAYROLL

Connecticut Department of Labor
Wage and Workplace Standards Division
200 Folly Brook Blvd.
Wethersfield, CT 06109

CONTRACTOR NAME AND ADDRESS:

SUBCONTRACTOR NAME & ADDRESS

WORKER'S COMPENSATION INSURANCE CARRIER

POLICY #

EFFECTIVE DATE:
EXPIRATION DATE:

PAYROLL NUMBER

Week-Ending Date

PROJECT NAME & ADDRESS

PERSON/WORKER, ADDRESS and SECTION	APPR RATE %	MALE/ FEMALE AND RACE*	WORK CLASSIFICATION Trade License Type & Number - OSHA 10 Certification Number	DAY AND DATE							Total ST Hours Total O/T Hours	BASE HOURLY RATE TOTAL FRINGE BENEFIT PLAN CASH	TYPE OF FRINGE BENEFITS Per Hour 1 through 6 (see back)	GROSS PAY FOR ALL WORK PERFORMED THIS WEEK	TOTAL DEDUCTIONS				GROSS PAY FOR THIS PREVAILING RATE JOB	CHECK # AND NET PAY
				S	M	T	W	TH	F	S					FICA	FEDERAL WITH-HOLDING	STATE WITH-HOLDING	LIST OTHER		
				HOURS WORKED EACH DAY																
												$ Base Rate $ Cash Fringe	1. $ 2. $ 3. $ 4. $ 5. $ 6. $							
												$ Base Rate $ Cash Fringe	1. $ 2. $ 3. $ 4. $ 5. $ 6. $							
												$ Base Rate $ Cash Fringe	1. $ 2. $ 3. $ 4. $ 5. $ 6. $							
												$ Base Rate $ Cash Fringe	1. $ 2. $ 3. $ 4. $ 5. $ 6. $							

12/9/2013
WWS-CP1

*IF REQUIRED

*SEE REVERSE SIDE

PAGE NUMBER ______OF

OSHA 10 ~ATTACH CARD TO 1ST CERTIFIED PAYROLL

***FRINGE BENEFITS EXPLANATION (P):**

Bona fide benefits paid to approved plans, funds or programs, except those required by Federal or State Law (unemployment tax, worker's compensation, income taxes, etc.).

Please specify the type of benefits provided:

1) Medical or hospital care _____ 4) Disability_____

2) Pension or retirement _____ 5) Vacation, holiday_____

3) Life Insurance _____ 6) Other (please specify) _____

CERTIFIED STATEMENT OF COMPLIANCE

For the week ending date of _____,

I, _____of _____, (hereafter known as

Employer) in my capacity as _____ (title) do hereby certify and state:

Section A:

1. All persons employed on said project have been paid the full weekly wages earned by them during the week in accordance with Connecticut General Statutes, section 31-53, as amended. Further, I hereby certify and state the following:

a) The records submitted are true and accurate;

b) The rate of wages paid to each mechanic, laborer or workman and the amount of payment or contributions paid or payable on behalf of each such employee to any employee welfare fund, as defined in Connecticut General Statutes, section 31-53 (h), are not less than the prevailing rate of wages and the amount of payment or contributions paid or payable on behalf of each such employee to any employee welfare fund, as determined by the Labor Commissioner pursuant to subsection Connecticut General Statutes, section 31-53 (d), and said wages and benefits are not less than those which may also be required by contract;

c) The Employer has complied with all of the provisions in Connecticut General Statutes, section 31-53 (and Section 31-54 if applicable for state highway construction);

d) Each such employee of the Employer is covered by a worker's compensation insurance policy for the duration of his employment which proof of coverage has been provided to the contracting agency;

e) The Employer does not receive kickbacks, which means any money, fee, commission, credit, gift, gratuity, thing of value, or compensation of any kind which is provided directly or indirectly, to any prime contractor, prime contractor employee, subcontractor, or subcontractor employee for the purpose of improperly obtaining or rewarding favorable treatment in connection with a prime contract or in connection with a prime contractor in connection with a subcontractor relating to a prime contractor; and

f) The Employer is aware that filing a certified payroll which he knows to be false is a class D felony for which the employer may be fined up to five thousand dollars, imprisoned for up to five years or both.

2. OSHA~The employer shall affix a copy of the construction safety course, program or training completion document to the certified payroll required to be submitted to the contracting agency for this project on which such employee's name first appears.

_____	_____	_____
(Signature)	(Title)	Submitted on (Date)

Section B: Applies to CONNDOT Projects ONLY

That pursuant to CONNDOT contract requirements for reporting purposes only, all employees listed under Section B who performed work on this project are not covered under the prevailing wage requirements defined in Connecticut General Statutes Section 31-53.

_____	_____	_____
(Signature)	(Title)	Submitted on (Date)

Note: CTDOL will assume all hours worked were performed under Section A unless clearly delineated as Section B WWS-CP1 as such. Should an employee perform work under both Section A and Section B, the hours worked and wages paid must be segregated for reporting purposes.

*****THIS IS A PUBLIC DOCUMENT*****

*****DO NOT INCLUDE SOCIAL SECURITY NUMBERS*****

Weekly Payroll Certification For
Public Works Projects (Continued)

PAYROLL CERTIFICATION FOR PUBLIC WORKS PROJECTS

WEEKLY PAYROLL

Week-Ending Date:
Contractor or Subcontractor Business Name:

PERSON/WORKER, ADDRESS and SECTION	APPR RATE %	MALE/ FEMALE AND RACE*	WORK CLASSIFICATION	DAY AND DATE							Total ST Hours	BASE HOURLY RATE	TYPE OF FRINGE BENEFITS Per Hour 1 through 6 (see back)	GROSS PAY FOR ALL WORK PERFORMED THIS WEEK	TOTAL DEDUCTIONS				GROSS PAY FOR THIS PREVAILING RATE JOB	CHECK # AND NET PAY
				S	M	T	W	TH	F	S					FICA	FEDERAL WITH-HOLDING	STATE WITH-HOLDING	LIST OTHER		
			Trade License Type & Number - OSHA 10 Certification Number	HOURS WORKED EACH DAY							Total O/T Hours	TOTAL FRINGE BENEFIT PLAN CASH								
												$ Base Rate	1. $ 2. $ 3. $							
												$ Cash Fringe	4. $ 5. $ 6. $							
												$ Base Rate	1. $ 2. $ 3. $							
												$ Cash Fringe	4. $ 5. $ 6. $							
												$ Base Rate	1. $ 2. $ 3. $							
												$ Cash Fringe	4. $ 5. $ 6. $							
												$ Base Rate	1. $ 2. $ 3. $							
												$ Cash Fringe	4. $ 5. $ 6. $							
												$ Base Rate	1. $ 2. $ 3. $							
												$ Cash Fringe	4. $ 5. $ 6. $							

*IF REQUIRED

12/9/2013
WWS-CP2

NOTICE: THIS PAGE MUST BE ACCOMPANIED BY A COVER PAGE (FORM # WWS-CP1)

PAGE NUMBER ______OF

SENIOR CENTER
LEBANON AVENUE
COLCHESTER, CT 06415
BID #2022-013

S/P+A PROJECT #20.003

Drawing Number	Drawing Name
	COVER – VOLUME 1
General Information & Code Drawings	
G001	GENERAL INFORMATION & DRAWING LIST
G002	BUILDING CODE PLANS & INFORMATION
Civil Drawings	
C001	SITE PLAN – EXISTING CONDITIONS
C002	SITE PLAN – LAYOUT & MATERIALS
C003	SITE PLAN - LANDSCAPING
C004 (GU)	SITE PLAN – GRADING
C005	SITE PLAN – UTILITIES
C006	SITE PLAN – SIGNAGE & PAVEMENT MARKINGS
C007	SITE PLAN – SEDIMENT & EROSION CONTROL
C008	SITE PLAN – SEDIMENT & EROSION CONTROL DETAILS
C009-C014	SITE DETAILS
Architectural Drawings	
A110	MAIN LEVEL FLOOR PLAN
A111-A119	NOT USED
A120	ATTIC LEVEL FLOOR PLAN
A121-A149	NOT USED
A150	ROOF PLAN
A151-A154	NOT USED
A155	TYPICAL ROOF DETAILS (BASE BID)
A156-A159	NOT USED
A160	ENLARGED PLANS
A161-A209	NOT USED
A210	MAIN LEVEL RCP
A211-A249	NOT USED
A250	CEILING DETAILS
A251-A259	NOT USED
A260	MAIN LEVEL FLOOR PATTERN & FINISH PLAN
A261-A279	NOT USED
A280	ENLARGED CORRIDOR FLOOR PATTERN PLAN W/WAINSCOT PLACEMENT
A281-A299	NOT USED
A300	EXTERIOR ELEVATIONS
A301-A399	NOT USED
A400-A403	BUILDING SECTIONS
A404-A499	NOT USED

A500-A504	WALL SECTIONS
A505-A549	NOT USED
A550-A553	SECTION DETAILS
A554-A599	NOT USED
A600	WINDOW ELEVATIONS
A601-A649	NOT USED
A650	WINDOW DETAILS
A651-A699	NOT USED
A700-A701	INTERIOR TOILET ELEVATIONS
A702-A709	NOT USED
A710-A714	INTERIOR ELEVATIONS
A715-A799	NOT USED
A800-A801	CASEWORK DETAILS – RECEPTION DESK
A802	CASEWORK DETAILS – BENCH & KIOSK
A803	CASEWORK DETAILS
A804-A909	NOT USED
A910	DOOR SCHEDULE, ELEVATIONS & DETAILS
A911-A919	NOT USED
A920	SIGNAGE DETAILS

Structural Drawings

S000	ISOMETRIC VIEWS
S001-S002	STRUCTURAL NOTES
S003	ROOF LOADING PLANS
S004-S099	NOT USED
S100	FOUNDATION PLAN
S101	ATTIC & ROOF PLAN
S102	TOWER ROOF & OVERBUILD PLAN
S103-S199	NOT USED
S200-S202	STRUCTURAL SECTIONS
S203-S299	NOT USED
S300-S303	STRUCTURAL DETAILS
S304	TRUSS PROFILES
S305-S399	NOT USED
S400	GRAPHICAL COLUMN SCHEDULE

COVER – VOLUME 2

Fire Protection Drawings

FP001	GENERAL NOTES – FIRE PROTECTION
FP002-FP099	NOT USED
FP100	FLOOR PLAN – FIRE PROTECTION
FP101	ATTIC PLAN – FIRE PROTECTION
FP102-FP199	NOT USED
FP200-FP202	SECTIONS – FIRE PROTECTION
FP203	ISOMETRIC PLAN – FIRE PROTECTION
FP204-FP299	NOT USED
FP300	SCHEDULES – FIRE PROTECTION
FP301-FP399	NOT USED
FP400	DETAILS – FIRE PROTECTION

Plumbing Drawings

P001	GENERAL NOTES – PLUMBING
P002-P100	NOT USED
P101	OVERALL PLANS – PLUMBING
P102	ATTIC PLAN – PLUMBING
P103-P200	NOT USED
P201	PARTIAL PLANS – PLUMBING
P202	KITCHEN PLAN – PLUMBING
P203-P299	NOT USED
P300	SCHEDULES – PLUMBING
P301-P399	NOT USED
P400-P401	DETAILS – PLUMBING

Mechanical Drawings

M000	MECHANICAL GENERAL NOTES
M001-M099	NOT USED
M100	MAIN LEVEL MECHANICAL PLAN
M101	ATTIC LEVEL MECHANICAL PLAN
M102-M499	NOT USED
M500-M501	MECHANICAL DETAILS
M502-M899	NOT USED
M900	MECHANICAL SCHEDULES

Electrical Drawings

E001	SYMBOLS, NOTES & ABBREVIATIONS – ELECTRICAL
E002	LIGHT FIXTURE SCHEDULE
E003-E100	NOT USED
E101	FLOOR PLAN – LIGHTING
E102	ATTIC PLAN – LIGHTING
E103-E200	NOT USED
E201	FLOOR PLAN – POWER
E202	ATTIC PLAN – POWER
E203-A300	NOT USED
E301	SITE PLAN – ELECTRICAL
E302-E400	NOT USED
E401	ONE-LINE DIAGRAM – ELECTRICAL & FIRE ALARM
E402-E500	NOT USED
E501-E502	PANEL SCHEDULES – ELECTRICAL
E503-E600	NOT USED
E601-E602	DETAILS – ELECTRICAL

Technology Drawings

T001	SYMBOLS, NOTES & ABBREVIATIONS – TECHNOLOGY
T002-T100	NOT USED
T101	FLOOR PLAN – TECHNOLOGY
T102	ATTIC PLAN – TECHNOLOGY

Food Service Drawings

FS000	FOODSERVICE EQUIPMENT SCHEDULE
FS001	GENERAL NOTES

FS002	ELECTRICAL NOTES
FS003	PLUMBING NOTES
FS004	MECHANICAL NOTES
FS005-FS099	NOT USED
FS100	FOODSERVICE EQUIPMENT PLAN & SCHEDULE
FS101-FS199	NOT USED
FS200	FOODSERVICE EQUIPMENT ELECTRICAL PLAN & SCHEDULE
FS201-FS299	NOT USED
FS300	FOODSERVICE EQUIPMENT PLUMBING PLAN & SCHEDULE
FS301-FS399	NOT USED
FS400	FOODSERVICE EQUIPMENT LIFE SAFETY PLAN
FS401-FS499	NOT USED
FS500	FOODSERVICE EQUIPMENT ELEVATIONS REFERENCE PLAN
FS501	FOODSERVICE EQUIPMENT ELEVATIONS
FS502-FS599	NOT USED
FS600	FOODSERVICE EQUIPMENT SPECIAL CONDITIONS PLAN
FS601	FOODSERVICE EQUIPMENT SLAB PENETRATIONS PLAN
FS602-FS699	NOT USED
FS700	FOODSERVICE EQUIPMENT CFM PLAN
FS701-FS799	NOT USED
FS800-FS806	FOODSERVICE EQUIPMENT HOOD DETAILS

END OF DRAWING LIST

SECTION 011000 - SUMMARY OF WORK

PART 1 - GENERAL

1.1 RELATED DOCUMENTS

A. Drawings and general provisions of Contract, including General Conditions and other Division 01 Specification Sections, apply to this Section.

1.2 PROJECT DESCRIPTION

A. The Work of the Project is defined by the Contract Documents and consists of the construction of a new building on an undeveloped site.

1.3 CONTRACTOR USE OF SITE AND PREMISES

A. Unrestricted Use of Site: Contractor shall have full use of Project site for construction operations during construction period.

1.5 WORK RESTRICTIONS

A. Comply with restrictions on construction operations.

1. Comply with limitations on use of public streets, work on public streets, rights of way, and other requirements of authorities having jurisdiction.

B. Smoking and Controlled Substance Restrictions: Use of tobacco products, alcoholic beverages, and other controlled substances will not be permitted on the grounds.

1.6 SPECIAL REQUIREMENTS

A. The Contractor shall insure that all work performed is done so in a safe manner and that all his/her employees shall adhere to all applicable safety procedures and practices at all times. The Contractor shall be aware at all times that additional safety considerations should be taken. Particular care shall be taken by the Contractor, Subcontractors and all those in their employ, that all tools, equipment, ladders, etc. are never left unsupervised.

PART 2 - PRODUCTS (Not Used)

PART 3 - EXECUTION (Not Used)

END OF SECTION 011000

SECTION 012300 - ALTERNATES

PART 1 - GENERAL

1.1 RELATED DOCUMENTS

A. Drawings and general provisions of the Contract, including General and Supplementary Conditions and other Division 01 Specification Sections, apply to this Section.

1.2 SUMMARY

A. Section includes administrative and procedural requirements for alternates.

1.3 DEFINITIONS

A. Alternate: An amount proposed by bidders and stated on the Bid Form for certain work defined in the Bidding Requirements that may be added to or deducted from the base bid amount if Owner decides to accept a corresponding change either in the amount of construction to be completed or in the products, materials, equipment, systems, or installation methods described in the Contract Documents.

1. Alternates described in this Section are part of the Work only if enumerated in the Agreement.
2. The cost or credit for each alternate is the net addition to or deduction from the Contract Sum to incorporate alternate into the Work. No other adjustments are made to the Contract Sum.

1.4 PROCEDURES

A. Coordination: Modify or adjust affected adjacent work as necessary to completely integrate work of the alternate into Project.

1. Include as part of each alternate, miscellaneous devices, accessory objects, and similar items incidental to or required for a complete installation whether or not indicated as part of alternate.

B. Notification: Immediately following award of the Contract, notify each party involved, in writing, of the status of each alternate. Indicate if alternates have been accepted, rejected, or deferred for later consideration. Include a complete description of negotiated modifications to alternates.

C. Execute accepted alternates under the same conditions as other work of the Contract. No extensions of time shall be granted for accepted alternates.

D. Schedule: A schedule of alternates is included at the end of this Section. Specification Sections referenced in schedule contain requirements for materials necessary to achieve the work described under each alternate.

PART 2 - PRODUCTS (Not Used)

PART 3 - EXECUTION

3.1 SCHEDULE OF ALTERNATES

A. **ADD ALTERNATE #1: Generator:** Add to the Base Bid the labor, material, and equipment for the provision and installation of a new 125kw natural gas generator where indicated on the Drawings. Work also includes the automatic transfer switch, sound attenuation, feeders, concrete pad, gas connection, and all associated components for a complete working system. Refer to Sections 263213 “Engine Generators” and 263600 “Transfer Switches” for additional information including other associated sections.

B. **ADD ALTERNATE #2: Coffered Ceiling Molding & Trim:** Add to the Base Bid the labor, material, and equipment for the provision and installation of crown molding and built-up trim at the coffered ceilings in Multi-Purpose Rooms 126 and 127. Refer to Drawings and Section 064023 “Interior Architectural Woodwork” for additional information.

C. **DEDUCT ALTERNATE #3: Plantings:** Deduct from the Base Bid the provision and installation of plantings surrounding the senior center and patio. Screening shrubs and trees shall remain part of Base Bid. Refer to Civil Drawings for additional information.

D. **DEDUCT ALTERNATE #4: Parking:** Deduct from the Base Bid the provision and installation of parking stalls from the Town Hall side of the building as indicated on the Drawings. Work includes all items for a completed system (grading, subbase, paving, pavement markings, etc.).

E. **DEDUCT ALTERNATE #5: Wainscot Panels and Stiles:** Deduct from the Base Bid the provision and installation of wainscot panels and stiles throughout the building. Wood base and rails shall remain part of the Base Bid. Exposed gypsum board to be painted. Refer to Drawings for additional information.

F. **DEDUCT ALTERNATE #6: Asphalt Shingles:** Deduct from the Base Bid the provision and installation of standing seam metal panel roofing and its associated components and instead include the provision and installation of asphalt shingle roofing and its associated components. Work will also include the provision and installation of a ventilated roof deck. Refer to Drawings and Sections 073113 “Asphalt Shingles” and 077253 “Snow Guards” for additional information.

G. **DEDUCT ALTERNATE #7: Kitchen Equipment:** Deduct from the Base Bid the provision and installation of select kitchen equipment as indicated on the Drawings. All connections and surrounding/supplementary items are to remain part of the Base Bid.

H. **VOLUNTARY ALTERNATE #8: Voluntary Alternate:** Prepared at the Contractor's discretion, when an appreciable value is represented in the Owner's best interest, either "ADD" or "DEDUCT". Include complete information in a separate narrative or proposal on the alternate, including manufacturer's literature, schedule information, etc.

END OF SECTION 012300

SECTION 012500 - SUBSTITUTION PROCEDURES

PART 1 - GENERAL

1.1 RELATED DOCUMENTS

A. Drawings and general provisions of the Contract, including General and Supplementary Conditions and other Division 01 Specification Sections, apply to this Section.

1.2 SUMMARY

A. Section includes administrative and procedural requirements for substitutions.

B. Related Sections:

1. Section 016000 "Product Requirements" for requirements for submitting comparable product submittals for products by listed manufacturers.
2. Divisions 02 through 49 Sections for specific requirements and limitations for substitutions.

1.3 DEFINITIONS

A. Substitutions: Changes in products, materials, equipment, and methods of construction from those required by the Contract Documents and proposed by Contractor.

1. Substitutions for Cause: Changes proposed by Contractor that are required due to changed Project conditions, such as unavailability of product, regulatory changes, or unavailability of required warranty terms.
2. Substitutions for Convenience: Changes proposed by Contractor or Owner that are not required in order to meet other Project requirements but may offer advantage to Contractor or Owner.

1.4 SUBMITTALS

A. Substitution Requests: Submit three (3) copies of each request for consideration. Identify product or fabrication or installation method to be replaced. Include Specification Section number and title and Drawing numbers and titles.

1. Substitution Request Form: Use **CSI Form 1.5C, 13.1A,** or comparable form.
2. Documentation: Show compliance with requirements for substitutions and the following, as applicable:

a. Statement indicating why specified product or fabrication or installation cannot be provided, if applicable.
b. Coordination information, including a list of changes or modifications needed to other parts of the Work and to construction performed by Owner and separate contractors, that will be necessary to accommodate proposed substitution.
c. Detailed, SIDE-BY-SIDE comparison of significant qualities of proposed substitution with those of the Work specified. Include annotated copy of applicable specification section. Significant qualities may include attributes such

as performance, weight, size, durability, visual effect, sustainable design characteristics, warranties, and specific features and requirements indicated. Indicate deviations, if any, from the Work specified.

d. Product Data, including drawings and descriptions of products and fabrication and installation procedures.
e. Samples, where applicable or requested.
f. Certificates and qualification data, where applicable or requested.
g. List of similar installations for completed projects with project names and addresses and names and addresses of Architects and Owners.
h. Material test reports from a qualified testing agency indicating and interpreting test results for compliance with requirements indicated.
i. Research reports evidencing compliance with building code in effect for Project, from ICC-ES.
j. Detailed comparison of Contractor's construction schedule using proposed substitution with products specified for the Work, including effect on the overall Contract Time. If specified product or method of construction cannot be provided within the Contract Time, include letter from manufacturer, on manufacturer's letterhead, stating date of receipt of purchase order, lack of availability, or delays in delivery.
k. Cost information, including a proposal of change, if any, in the Contract Sum.
l. Contractor's certification that proposed substitution complies with requirements in the Contract Documents except as indicated in substitution request, is compatible with related materials, and is appropriate for applications indicated.
m. Contractor's waiver of rights to additional payment or time that may subsequently become necessary because of failure of proposed substitution to produce indicated results.

3. Architect's Action: If necessary, Architect will request additional information or documentation for evaluation within seven (7) days of receipt of a request for substitution. Architect will notify Contractor of acceptance or rejection of proposed substitution within fifteen (15) days of receipt of request, or seven (7) days of receipt of additional information or documentation, whichever is later.

a. Forms of Acceptance: Change Order, Construction Change Directive, or Architect's Supplemental Instructions for minor changes in the Work.
b. Use product specified if Architect does not issue a decision on use of a proposed substitution within time allocated.

1.5 QUALITY ASSURANCE

A. Compatibility of Substitutions: Investigate and document compatibility of proposed substitution with related products and materials. Engage qualified testing agency to perform compatibility tests recommended by manufacturers.

1.6 PROCEDURES

A. Coordination: Modify or adjust affected work as necessary to integrate work of the approved substitutions.

PART 2 - PRODUCTS

2.1 SUBSTITUTIONS

A. Procurement Substitution Request: Submit to Architect seven (7) days prior to date of bid opening.

B. Substitutions for Cause: Submit requests for substitution immediately upon discovery of need for change, but not later than fifteen (15) days prior to time required for preparation and review of related submittals.

1. Conditions: Architect will consider Contractor's request for substitution when the following conditions are satisfied. If the following conditions are not satisfied, Architect will return requests without action, except to record noncompliance with these requirements:

a. Requested substitution is consistent with the Contract Documents and will produce indicated results.
b. Substitution request is fully documented and properly submitted.
c. Requested substitution will not adversely affect Contractor's construction schedule.
d. Requested substitution has received necessary approvals of authorities having jurisdiction.
e. Requested substitution is compatible with other portions of the Work.
f. Requested substitution has been coordinated with other portions of the Work.
g. Requested substitution provides specified warranty.
h. If requested substitution involves more than one (1) contractor, requested substitution has been coordinated with other portions of the Work, is uniform and consistent, is compatible with other products, and is acceptable to all contractors involved.

C. Substitutions for Convenience: Architect will consider requests for substitution if received within sixty (60) days after the Notice to Proceed. Requests received after that time may be considered or rejected at discretion of Architect.

1. Conditions: Architect will consider Contractor's request for substitution when the following conditions are satisfied. If the following conditions are not satisfied, Architect will return requests without action, except to record noncompliance with these requirements:

a. Requested substitution offers Owner a substantial advantage in cost, time, energy conservation, or other considerations, after deducting additional responsibilities Owner must assume. Owner's additional responsibilities may include compensation to Architect for redesign and evaluation services, increased cost of other construction by Owner, and similar considerations.
b. Requested substitution does not require extensive revisions to the Contract Documents.
c. Requested substitution is consistent with the Contract Documents and will produce indicated results.
d. Substitution request is fully documented and properly submitted.
e. Requested substitution will not adversely affect Contractor's construction schedule.

f. Requested substitution has received necessary approvals of authorities having jurisdiction.
g. Requested substitution is compatible with other portions of the Work.
h. Requested substitution has been coordinated with other portions of the Work.
i. Requested substitution provides specified warranty.
j. If requested substitution involves more than one (1) contractor, requested substitution has been coordinated with other portions of the Work, is uniform and consistent, is compatible with other products, and is acceptable to all contractors involved.

PART 3 - EXECUTION (Not Used)

END OF SECTION 012500

SECTION 012600 - CONTRACT MODIFICATION PROCEDURES

PART 1 - GENERAL

1.1 RELATED DOCUMENTS

A. Drawings and general provisions of the Contract, including General and Supplementary Conditions and other Division 01 Specification Sections, apply to this Section.

1.2 SUMMARY

A. Section includes administrative and procedural requirements for handling and processing Contract modifications.

B. Related Sections:

1. Section 016000 "Product Requirements" for administrative procedures for handling requests for substitutions made after Contract award.

1.3 MINOR CHANGES IN THE WORK

A. Architect will issue supplemental instructions authorizing minor changes in the Work, not involving adjustment to the Contract Sum or the Contract Time, on AIA Document G710, "Architect's Supplemental Instructions."

1.4 PROPOSAL REQUESTS

A. Owner-Initiated Proposal Requests: Architect will issue a detailed description of proposed changes in the Work that may require adjustment to the Contract Sum or the Contract Time. If necessary, the description will include supplemental or revised Drawings and Specifications.

1. Proposal Requests issued by Architect are not instructions either to stop work in progress or to execute the proposed change.
2. Within time specified in Proposal Request or twenty (20) days, when not otherwise specified, after receipt of Proposal Request, submit a quotation estimating cost adjustments to the Contract Sum and the Contract Time necessary to execute the change.

    a. Include a list of quantities of products required or eliminated and unit costs, with total amount of purchases and credits to be made. If requested, furnish survey data to substantiate quantities.
    b. Indicate applicable taxes, delivery charges, equipment rental, and amounts of trade discounts.
    c. Include costs of labor and supervision directly attributable to the change.
    d. Include an updated Contractor's construction schedule that indicates the effect of the change, including, but not limited to, changes in activity duration, start and finish times, and activity relationship. Use available total float before requesting an extension of the Contract Time.
    e. Quotation Form: Use forms acceptable to Architect.

B. Contractor-Initiated Proposals: If latent or changed conditions require modifications to the Contract, Contractor may initiate a claim by submitting a request for a change to the Architect.

1. Include a statement outlining reasons for the change and the effect of the change on the Work. Provide a complete description of the proposed change. Indicate the effect of the proposed change on the Contract Sum and the Contract Time.
2. Include a list of quantities of products required or eliminated and unit costs, with total amount of purchases and credits to be made. If requested, furnish survey data to substantiate quantities.
3. Indicate applicable delivery charges, equipment rental, and amounts of trade discounts.
4. Include costs of labor and supervision directly attributable to the change.
5. Include an updated Contractor's construction schedule that indicates the effect of the change, including, but not limited to, changes in activity duration, start and finish times, and activity relationship. Use available total float before requesting an extension of the Contract Time.
6. Comply with requirements in Section 012500 "Substitution Procedures" if the proposed change requires substitution of one (1) product or system for product or system specified.
7. Proposal Request Form: Use form acceptable to Architect.

1.5 CHANGE ORDER PROCEDURES

A. On Owner's approval of a Proposal Request, Architect will issue a Change Order for signatures of Owner and Contractor on AIA Document G701.

1.6 CONSTRUCTION CHANGE DIRECTIVE

A. Construction Change Directive: Architect may issue a Construction Change Directive on AIA Document G714. Construction Change Directive instructs Contractor to proceed with a change in the Work, for subsequent inclusion in a Change Order.

1. Construction Change Directive contains a complete description of change in the Work. It also designates method to be followed to determine change in the Contract Sum or the Contract Time.

B. Documentation: Maintain detailed records on a time and material basis of work required by the Construction Change Directive.

1. After completion of change, submit an itemized account and supporting data necessary to substantiate cost and time adjustments to the Contract.

PART 2 - PRODUCTS (Not Used)

PART 3 - EXECUTION (Not Used)

END OF SECTION 012600

SECTION 012900 - PAYMENT PROCEDURES

PART 1 - GENERAL

1.1 RELATED DOCUMENTS

A. Drawings and general provisions of the Contract, including General and Supplementary Conditions and other Division 01 Specification Sections, apply to this Section.

1.2 SUMMARY

A. This Section specifies administrative and procedural requirements necessary to prepare and process Applications for Payment.

B. Related Sections:

1. Section 012600 "Contract Modification Procedures" for administrative procedures for handling changes to the Contract.
2. Section 013200 "Construction Progress Documentation" for administrative requirements governing the preparation and submittal of the Contractor's construction schedule.
3. Section 013300 "Submittal Procedures" for administrative requirements governing the preparation and submittal of the submittal schedule.

1.3 SCHEDULE OF VALUES

A. Coordination: Coordinate preparation of the schedule of values with preparation of Contractor's construction schedule.

1. Correlate line items in the schedule of values with other required administrative forms and schedules, including the following:

   a. Application for Payment forms with continuation sheets.
   b. Submittal schedule.
   c. Items required to be indicated as separate activities in Contractor's construction schedule.

2. Submit the schedule of values to Architect at earliest possible date but no later than seven (7) days before the date scheduled for submittal of initial Applications for Payment.

B. Format and Content: Use the Project Manual table of contents as a guide to establish line items for the schedule of values. Provide at least one (1) line item for each Specification Section.

1. Identification: Include the following Project identification on the schedule of values:

   a. Project name and location.
   b. Name of Architect.
   c. Architect's project number.
   d. Contractor's name and address.
   e. Date of submittal.

2. Arrange schedule of values consistent with format of AIA Document G703.
3. Provide a breakdown of the Contract Sum in enough detail to facilitate continued evaluation of Applications for Payment and progress reports. Coordinate with the Project Manual table of contents. Provide multiple line items for principal subcontract amounts in excess of five percent (5%) of Contract Sum.
4. Round amounts to nearest whole dollar; total shall equal the Contract Sum.
5. Provide a separate line item in the schedule of values for each part of the Work where Applications for Payment may include materials or equipment purchased or fabricated and stored, but not yet installed.

    a. Differentiate between items stored on-site and items stored off-site. If required, include evidence of insurance.

6. Provide separate line items in the schedule of values for initial cost of materials, for each subsequent stage of completion, and for total installed value of that part of the Work.
7. Each item in the schedule of values and Applications for Payment shall be complete. Include total cost and proportionate share of general overhead and profit for each item.

    a. Temporary facilities and other major cost items that are not direct cost of actual work-in-place may be shown either as separate line items in the schedule of values or distributed as general overhead expense, at Contractor's option.

8. Schedule Updating: Update and resubmit the schedule of values before the next Applications for Payment when Change Orders or Construction Change Directives result in a change in the Contract Sum.

1.4 APPLICATIONS FOR PAYMENT

A. Each Application for Payment shall be consistent with previous applications and payments as certified by Architect and paid for by Owner.

    1. Initial Application for Payment, Application for Payment at time of Substantial Completion, and final Application for Payment involve additional requirements.

B. Payment Application Times: The date for each progress payment is indicated in the Agreement between Owner and Contractor. The period of construction work covered by each Application for Payment is the period indicated in the Agreement.

C. Application for Payment Forms: Use AIA Document G702 and AIA Document G703 as form for Applications for Payment.

D. Application Preparation: Complete every entry on form. Notarize and execute by a person authorized to sign legal documents on behalf of Contractor. Architect will return incomplete applications without action.

    1. Entries shall match data on the schedule of values and Contractor's construction schedule. Use updated schedules if revisions were made.
    2. Include amounts for work completed following previous Application for Payment, whether or not payment has been received. Include only amounts for work completed at time of Application for Payment.

3. Include amounts of Change Orders and Construction Change Directives issued before last day of construction period covered by application.
4. Indicate separate amounts for work being carried out under Owner-requested project acceleration.
5. Include updated and approved Contractor's construction schedule, potential Change Order Log and Product Submittal Log.

E. Stored Materials: Include in Application for Payment amounts applied for materials or equipment purchased or fabricated and stored, but not yet installed. Differentiate between items stored on-site and items stored off-site.

1. Provide certificate of insurance, evidence of transfer of title to Owner, and consent of surety to payment, for stored materials.
2. Provide supporting documentation that verifies amount requested, such as paid invoices. Match amount requested with amounts indicated on documentation; do not include overhead and profit on stored materials.
3. Provide summary documentation for stored materials indicating the following:

    a. Materials previously stored and included in previous Applications for Payment.
    b. Work completed for this Application utilizing previously stored materials.
    c. Additional materials stored with this Application.
    d. Total materials remaining stored, including materials with this Application.

F. Transmittal: Submit three (3) signed and notarized original copies of each Application for Payment to Architect by a method ensuring receipt within 24 hours. One (1) copy shall include waivers of lien and similar attachments if required.

1. Transmit each copy with a transmittal form listing attachments and recording appropriate information about application.

G. Waivers of Mechanic's Lien: With each Application for Payment, submit waivers of mechanic's liens from subcontractors, sub-subcontractors, and suppliers for construction period covered by the previous application.

1. Submit partial waivers on each item for amount requested in previous application, after deduction for retainage, on each item.
2. When an application shows completion of an item, submit conditional final or full waivers.
3. Owner reserves the right to designate which entities involved in the Work must submit waivers.
4. Submit final Application for Payment with or preceded by conditional final waivers from every entity involved with performance of the Work covered by the application who is lawfully entitled to a lien.
5. Waiver Forms: Submit waivers of lien on forms, executed in a manner acceptable to Owner.

H. Initial Application for Payment: Administrative actions and submittals that must precede or coincide with submittal of first Application for Payment include the following:

1. List of subcontractors.
2. Schedule of values.

3. Contractor's construction schedule (preliminary if not final).
4. Products list (preliminary if not final).
5. Schedule of unit prices.
6. Submittal schedule (preliminary if not final).
7. List of Contractor's staff assignments.
8. List of Contractor's principal consultants.
9. Copies of building permits.
10. Copies of authorizations and licenses from authorities having jurisdiction for performance of the Work.
11. Initial progress report.
12. Report of preconstruction conference.
13. Certificates of insurance and insurance policies.
14. Performance and payment bonds.
15. Data needed to acquire Owner's insurance.

I. Application for Payment at Substantial Completion: After issuing the Certificate of Substantial Completion, submit an Application for Payment showing one hundred percent (100%) completion for portion of the Work claimed as substantially complete.

1. Include documentation supporting claim that the Work is substantially complete and a statement showing an accounting of changes to the Contract Sum.
2. This application shall reflect Certificates of Partial Substantial Completion issued previously for Owner occupancy of designated portions of the Work.

J. Final Payment Application: Submit final Application for Payment with releases and supporting documentation not previously submitted and accepted, including, but not limited, to the following:

1. Evidence of completion of Project closeout requirements.
2. Insurance certificates for products and completed operations where required and proof that taxes, fees, and similar obligations were paid.
3. Updated final statement, accounting for final changes to the Contract Sum.
4. AIA Document G706, "Contractor's Affidavit of Payment of Debts and Claims."
5. AIA Document G706A, "Contractor's Affidavit of Release of Liens."
6. AIA Document G707, "Consent of Surety to Final Payment."
7. Evidence that claims have been settled.
8. Final meter readings for utilities, a measured record of stored fuel, and similar data as of date of Substantial Completion or when Owner took possession of and assumed responsibility for corresponding elements of the Work.
9. Final liquidated damages settlement statement.

PART 2 - PRODUCTS (Not Used)

PART 3 - EXECUTION (Not Used)

END OF SECTION 012900

SECTION 013100 - PROJECT MANAGEMENT AND COORDINATION

PART 1 - GENERAL

1.1 RELATED DOCUMENTS

A. Drawings and general provisions of the Contract, including General and Supplementary Conditions and other Division 01 Specification Sections, apply to this Section.

1.2 SUMMARY

A. Section includes administrative provisions for coordinating construction operations on Project including, but not limited to, the following:

1. General project coordination procedures.
2. Administrative and supervisory personnel.
3. Coordination drawings.
4. Requests for Information (RFIs).
5. Project meetings.

B. Each contractor shall participate in coordination requirements. Certain areas of responsibility are assigned to a specific contractor.

C. Related Sections:

1. Section 013200 "Construction Progress Documentation" for preparing and submitting Contractor's construction schedule.
2. Section 017300 "Execution" for procedures for coordinating general installation and field-engineering services, including establishment of benchmarks and control points.
3. Section 017700 "Closeout Procedures" for coordinating closeout of the Contract.

1.3 DEFINITIONS

A. RFI: Request from Owner, Architect, or Contractor seeking information from each other during construction.

1.4 COORDINATION

A. Coordination: Coordinate construction operations included in different Sections of the Specifications to ensure efficient and orderly installation of each part of the Work. Coordinate construction operations, included in different Sections, that depend on each other for proper installation, connection, and operation.

1. Schedule construction operations in sequence required to obtain the best results where installation of one (1) part of the Work depends on installation of other components, before or after its own installation.
2. Coordinate installation of different components to ensure maximum performance and accessibility for required maintenance, service, and repair.
3. Make adequate provisions to accommodate items scheduled for later installation.

B. Prepare memoranda for distribution to each party involved, outlining special procedures required for coordination. Include such items as required notices, reports, and list of attendees at meetings.

1. Prepare similar memoranda for Owner and separate Contractors if coordination of their Work is required.

C. Administrative Procedures: Coordinate scheduling and timing of required administrative procedures with other construction activities to avoid conflicts and to ensure orderly progress of the Work. Such administrative activities include, but are not limited to, the following:

1. Preparation of Contractor's construction schedule.
2. Preparation of the schedule of values.
3. Installation and removal of temporary facilities and controls.
4. Delivery and processing of submittals.
5. Progress meetings.
6. Pre-installation conferences.
7. Startup and adjustment of systems.
8. Project closeout activities.

D. Conservation: Coordinate construction activities to ensure that operations are carried out with consideration given to conservation of energy, water, and materials. Coordinate use of temporary utilities to minimize waste.

1. Salvage materials and equipment involved in performance of, but not actually incorporated into, the Work. Refer to other Sections for disposition of salvaged materials that are designated as Owner's property.

1.5 COORDINATION DRAWINGS

A. Coordination Drawings, General: Prepare coordination drawings in accordance with requirements in individual Sections, where installation is not completely shown on Shop Drawings, where limited space availability necessitates coordination, or if coordination is required to facilitate integration of products and materials fabricated or installed by more than one (1) entity.

1. Content: Project-specific information, drawn accurately to a scale large enough to indicate and resolve conflicts. Do not base coordination drawings on standard printed data. Include the following information, as applicable:

a. Use applicable Drawings as a basis for preparation of coordination drawings. Prepare sections, elevations, and details as needed to describe relationship of various systems and components.
b. Coordinate the addition of trade-specific information to the coordination drawings by multiple Contractors in a sequence that best provides for coordination of the information and resolution of conflicts between installed components before submitting for review.
c. Indicate functional and spatial relationships of components of architectural, structural, civil, mechanical, and electrical systems.
d. Indicate space requirements for routine maintenance and for anticipated replacement of components during the life of the installation.

e. Show location and size of access doors required for access to concealed dampers, valves, and other controls.
f. Indicate required installation sequences.
g. Indicate dimensions shown on the Drawings. Specifically note dimensions that appear to be in conflict with submitted equipment and minimum clearance requirements. Provide alternate sketches to Architect indicating proposed resolution of such conflicts. Minor dimension changes and difficult installations will not be considered changes to the Contract.

B. Coordination Drawing Organization: Organize coordination drawings as follows:

1. Floor Plans and Reflected Ceiling Plans: Show architectural and structural elements, and mechanical, plumbing, fire protection, fire alarm, and electrical Work. Show locations of visible ceiling-mounted devices relative to acoustical ceiling grid. Supplement plan drawings with section drawings where required to adequately represent the Work.
2. Plenum Space: Indicate subframing for support of ceiling and wall systems, mechanical and electrical equipment, and related Work. Locate components within ceiling plenum to accommodate layout of light fixtures indicated on Drawings. Indicate areas of conflict between light fixtures and other components.
3. Mechanical Rooms: Provide coordination drawings for mechanical rooms showing plans and elevations of mechanical, plumbing, fire protection, fire alarm, and electrical equipment.
4. Structural Penetrations: Indicate penetrations and openings required for all disciplines.
5. Slab Edge and Embedded Items: Indicate slab edge locations and sizes and locations of embedded items for metal fabrications, sleeves, anchor bolts, bearing plates, angles, door floor closers, slab depressions for floor finishes, curbs and housekeeping pads, and similar items.
6. Mechanical and Plumbing Work: Show the following:

   a. Sizes and bottom elevations of ductwork, piping, and conduit runs, including insulation, bracing, flanges, and support systems.
   b. Dimensions of major components, such as dampers, valves, diffusers, access doors, cleanouts and electrical distribution equipment.
   c. Fire-rated enclosures around ductwork.

7. Electrical Work: Show the following:

   a. Runs of vertical and horizontal conduit 1¼ inch diameter and larger.
   b. Light fixture, exit light, emergency battery pack, smoke detector, and other fire alarm locations.
   c. Panel board, switch board, switchgear, transformer, busway, generator, and motor control center locations.
   d. Location of pull boxes and junction boxes, dimensioned from column center lines.

8. Fire Protection System: Show the following:

   a. Locations of standpipes, mains piping, branch lines, pipe drops, and sprinkler heads.

9. Review: Architect will review coordination drawings to confirm that the Work is being coordinated, but not for the details of the coordination, which are the Contractor's

responsibility. If the Architect determines that the coordination drawings are not being prepared in sufficient scope or detail, or are otherwise deficient, the Architect will so inform the Contractor, who shall make changes as directed and resubmit.

10. Coordination Drawing Prints: Prepare coordination drawing prints in accordance with requirements of Section 013300 "Submittal Procedures."

1.6 KEY PERSONNEL

A. Key Personnel Names: Within fifteen (15) days of starting construction operations, submit a list of key personnel assignments, including superintendent and other personnel in attendance at Project site. Identify individuals and their duties and responsibilities; list addresses and telephone numbers, including home, office, and cellular telephone numbers and email addresses. Provide names, addresses, and telephone numbers of individuals assigned as standbys in the absence of individuals assigned to Project.

1. Post copies of list in project meeting room, in temporary field office, and by each temporary telephone. Keep list current at all times.

1.7 REQUESTS FOR INFORMATION (RFIs)

A. General: Immediately on discovery of the need for additional information or interpretation of the Contract Documents, Contractor shall prepare and submit an RFI in the form specified.

1. Architect will return RFIs submitted to Architect by other entities controlled by Contractor with no response.
2. Coordinate and submit RFIs in a prompt manner so as to avoid delays in Contractor's work or work of subcontractors.

B. Content of the RFI: Include a detailed, legible description of item needing information or interpretation and the following:

1. Project name.
2. Project number.
3. Date.
4. Name of Contractor.
5. Name of Architect.
6. RFI number, numbered sequentially.
7. RFI subject.
8. Specification Section number and title and related paragraphs, as appropriate.
9. Drawing number and detail references, as appropriate.
10. Field dimensions and conditions, as appropriate.
11. Contractor's suggested resolution. If Contractor's solution(s) impacts the Contract Time or the Contract Sum, Contractor shall state impact in the RFI.
12. Contractor's signature.
13. Attachments: Include sketches, descriptions, measurements, photos, Product Data, Shop Drawings, coordination drawings, and other information necessary to fully describe items needing interpretation.

    a. Include dimensions, thicknesses, structural grid references, and details of affected materials, assemblies, and attachments on attached sketches.

C. RFI Forms: AIA Document G716 or comparable form.

D. Architect's Action: Architect will review each RFI, determine action required, and respond. Allow seven (7) working days for Architect's response for each RFI. RFIs received by Architect after 1:00 p.m. will be considered as received the following working day.

1. The following RFIs will be returned without action:

a. Requests for approval of submittals.
b. Requests for approval of substitutions.
c. Requests for coordination information already indicated in the Contract Documents.
d. Requests for adjustments in the Contract Time or the Contract Sum.
e. Requests for interpretation of Architect's actions on submittals.
f. Incomplete RFIs or inaccurately prepared RFIs.

2. Architect's action may include a request for additional information, in which case Architect's time for response will date from time of receipt of additional information.
3. Architect's action on RFIs that may result in a change to the Contract Time or the Contract Sum may be eligible for Contractor to submit Change Proposal according to Section 012600 "Contract Modification Procedures."

a. If Contractor believes the RFI response warrants change in the Contract Time or the Contract Sum, notify Architect in writing within ten (10) days of receipt of the RFI response.

E. On receipt of Architect's action, update the RFI log and immediately distribute the RFI response to affected parties. Review response and notify Architect within seven (7) days if Contractor disagrees with response.

F. RFI Log: Prepare, maintain, and submit a tabular log of RFIs organized by the RFI number. Submit log weekly. Include the following:

1. Project name.
2. Name and address of Contractor.
3. Name and address of Architect.
4. RFI number including RFIs that were dropped and not submitted.
5. RFI description.
6. Date the RFI was submitted.
7. Date Architect's response was received.
8. Identification of related Minor Change in the Work, Construction Change Directive, and Proposal Request, as appropriate.

1.8 PROJECT MEETINGS

A. General: Schedule and conduct meetings and conferences at Project site, unless otherwise indicated.

1. Attendees: Inform participants and others involved, and individuals whose presence is required, of date and time of each meeting. Notify Owner and Architect of scheduled meeting dates and times.

2. Agenda: Prepare the meeting agenda. Distribute the agenda to all invited attendees.
3. Minutes: General Contractor or Construction Manager is responsible for recording significant discussions and agreements achieved. General Contractor or Construction Manager is also responsible for distributing the meeting minutes to everyone concerned including Owner and Architect, within three (3) days of the meeting.

B. PreconstructionConference: Schedule and conduct a preconstruction conference before starting construction, at a time convenient to Owner and Architect, but no later than fifteen (15) days after execution of the Agreement.

1. Conduct the conference to review responsibilities and personnel assignments.
2. Attendees: Authorized representatives of Owner, Construction Administrator, Architect, and their consultants; Contractor and its superintendent; major subcontractors; suppliers; and other concerned parties shall attend the conference. Participants at the conference shall be familiar with Project and authorized to conclude matters relating to the Work.
3. Agenda: Discuss items of significance that could affect progress, including the following:

    a. Tentative construction schedule.
    b. Phasing.
    c. Critical work sequencing and long-lead items.
    d. Designation of key personnel and their duties.
    e. Lines of communications.
    f. Procedures for processing field decisions and Change Orders.
    g. Procedures for RFIs.
    h. Procedures for testing and inspecting.
    i. Procedures for processing Applications for Payment.
    j. Distribution of the Contract Documents.
    k. Submittal procedures.
    l. Preparation of record documents.
    m. Work restrictions.
    n. Working hours.
    o. Owner's occupancy requirements.
    p. Responsibility for temporary facilities and controls.
    q. Procedures for moisture and mold control.
    r. Procedures for disruptions and shutdowns.
    s. Parking availability.
    t. Office, work, and storage areas.
    u. Equipment deliveries and priorities.
    v. First aid.
    w. Security.
    x. Progress cleaning.

4. Minutes: General Contractor or Construction Manager is responsible for recording and distributing meeting minutes.

C. Preinstallation Conferences: Conduct a preinstallation conference at Project site before each construction activity that requires coordination with other construction.

1. Attendees: Installer and representatives of manufacturers and fabricators involved in or affected by the installation and its coordination or integration with other materials and

installations that have preceded or will follow, shall attend the meeting. Advise Architect of scheduled meeting dates.

2. Agenda: Review progress of other construction activities and preparations for the particular activity under consideration, including requirements for the following:

    a. Contract Documents.
    b. Options.
    c. Related RFIs.
    d. Related Change Orders.
    e. Purchases.
    f. Deliveries.
    g. Submittals.
    h. Review of mockups.
    i. Possible conflicts.
    j. Compatibility problems.
    k. Time schedules.
    l. Weather limitations.
    m. Manufacturer's written recommendations.
    n. Warranty requirements.
    o. Compatibility of materials.
    p. Acceptability of substrates.
    q. Temporary facilities and controls.
    r. Space and access limitations.
    s. Regulations of authorities having jurisdiction.
    t. Testing and inspecting requirements.
    u. Installation procedures.
    v. Coordination with other work.
    w. Required performance results.
    x. Protection of adjacent work.
    y. Protection of construction and personnel.

3. Record significant conference discussions, agreements, and disagreements, including required corrective measures and actions.
4. Reporting: Distribute minutes of the meeting to each party present and to other parties requiring information.
5. Do not proceed with installation if the conference cannot be successfully concluded. Initiate whatever actions are necessary to resolve impediments to performance of the Work and reconvene the conference at earliest feasible date.

D. Project Closeout Conference: Schedule and conduct a Project closeout conference, at a time convenient to Owner and Architect, but no later than thirty (30) days prior to the scheduled date of Substantial Completion.

1. Conduct the conference to review requirements and responsibilities related to Project closeout.
2. Attendees: Authorized representatives of Owner, Architect, and their consultants; Contractor and its superintendent; major subcontractors; suppliers; and other concerned parties shall attend the meeting. Participants at the meeting shall be familiar with Project and authorized to conclude matters relating to the Work.
3. Agenda: Discuss items of significance that could affect or delay Project closeout, including the following:

a. Preparation of record documents.
b. Procedures required prior to inspection for Substantial Completion and for final inspection for acceptance.
c. Submittal of written warranties.
d. Requirements for preparing operations and maintenance data.
e. Requirements for demonstration and training.
f. Preparation of Contractor's punch list.
g. Procedures for processing Applications for Payment at Substantial Completion and for final payment.
h. Submittal procedures.
Installation of Owner's furniture, fixtures, and equipment.
i. Responsibility for removing temporary facilities and controls.

4. Minutes: General Contractor or Construction Manager is responsible for recording and distributing meeting minutes.

E. Progress Meetings: Conduct progress meetings at biweekly intervals.

1. Coordinate dates of meetings with preparation of payment requests.
2. Attendees: In addition to representatives of Owner and Architect, each Contractor, subcontractor, supplier, and other entity concerned with current progress or involved in planning, coordination, or performance of future activities shall be represented at these meetings. All participants at the meeting shall be familiar with Project and authorized to conclude matters relating to the Work.
3. Agenda: Review and correct or approve minutes of previous progress meeting. Review other items of significance that could affect progress. Include topics for discussion as appropriate to status of Project.

a. Contractor's Construction Schedule: Review progress since the last meeting. Determine whether each activity is on time, ahead of schedule, or behind schedule, in relation to Contractor's construction schedule. Determine how construction behind schedule will be expedited; secure commitments from parties involved to do so. Discuss whether schedule revisions are required to ensure that current and subsequent activities will be completed within the Contract Time.

1) Review schedule for next period.

b. Review present and future needs of each entity present, including the following:

1) Interface requirements.
2) Sequence of operations.
3) Status of submittals.
4) Deliveries.
5) Off-site fabrication.
6) Access.
7) Site utilization.
8) Temporary facilities and controls.
9) Progress cleaning.
10) Quality and work standards.
11) Status of correction of deficient items.
12) Field observations.

13) Status of RFIs.
14) Status of proposal requests.
15) Pending changes.
16) Status of Change Orders.
17) Pending claims and disputes.
18) Documentation of information for payment requests.

4. Minutes: General Contractor or Construction Manager is responsible for recording and distributing meeting minutes.

a. Schedule Updating: Revise Contractor's construction schedule after each progress meeting where revisions to the schedule have been made or recognized. Issue revised schedule concurrently with the report of each meeting.

F. Coordination Meetings: Conduct Project coordination meetings at required intervals. Project coordination meetings are in addition to specific meetings held for other purposes, such as progress meetings and preinstallation conferences.

1. Agenda: Review and correct or approve minutes of the previous coordination meeting. Review other items of significance that could affect progress. Include topics for discussion as appropriate to status of Project.

a. Combined Contractor's Construction Schedule: Review progress since the last coordination meeting. Determine whether each contract is on time, ahead of schedule, or behind schedule, in relation to combined Contractor's construction schedule. Determine how construction behind schedule will be expedited; secure commitments from parties involved to do so. Discuss whether schedule revisions are required to ensure that current and subsequent activities will be completed within the Contract Time.
b. Schedule Updating: Revise combined Contractor's construction schedule after each coordination meeting where revisions to the schedule have been made or recognized. Issue revised schedule concurrently with report of each meeting.
c. Review present and future needs of each contractor present, including the following:

1) Interface requirements.
2) Sequence of operations.
3) Status of submittals.
4) Deliveries.
5) Off-site fabrication.
6) Access.
7) Site utilization.
8) Temporary facilities and controls.
9) Work hours.
10) Hazards and risks.
11) Progress cleaning.
12) Quality and work standards.
13) Change Orders.

2. Reporting: Record meeting results and distribute copies to everyone in attendance and to others affected by decisions or actions resulting from each meeting.

PART 2 - PRODUCTS (Not Used)

PART 3 - EXECUTION (Not Used)

END OF SECTION 013100

SECTION 013200 - CONSTRUCTION PROGRESS DOCUMENTATION

PART 1 - GENERAL

1.1 RELATED DOCUMENTS

A. Drawings and general provisions of the Contract, including General and Supplementary Conditions and other Division 01 Specification Sections, apply to this Section.

1.2 SUMMARY

A. Section includes administrative and procedural requirements for documenting the progress of construction during performance of the Work, including the following:

1. Contractor's construction schedule.
2. Daily construction reports.
3. Material location reports.
4. Field condition reports.

B. Related Sections:

1. Section 013300 "Submittal Procedures" for submitting schedules and reports.
2. Section 014000 "Quality Requirements" for submitting a schedule of tests and inspections.

1.3 DEFINITIONS

A. Activity: A discrete part of a project that can be identified for planning, scheduling, monitoring, and controlling the construction project. Activities included in a construction schedule consume time and resources.

1. Critical Activity: An activity on the critical path that must start and finish on the planned early start and finish times.
2. Predecessor Activity: An activity that precedes another activity in the network.
3. Successor Activity: An activity that follows another activity in the network.

B. Cost Loading: The allocation of the schedule of values for the completion of an activity as scheduled. The sum of costs for all activities must equal the total Contract Sum, unless otherwise approved by Architect.

C. Critical Path: The longest connected chain of interdependent activities through the network schedule that establishes the minimum overall Project duration and contains no float.

D. Event: The starting or ending point of an activity.

E. Float: The measure of leeway in starting and completing an activity.

1. Float time is not for the exclusive use or benefit of either Owner or Contractor, but is a jointly owned, expiring Project resource available to both parties as needed to meet schedule milestones and Contract completion date.

2. Free float is the amount of time an activity can be delayed without adversely affecting the early start of the successor activity.
3. Total float is the measure of leeway in starting or completing an activity without adversely affecting the planned Project completion date.

F. Resource Loading: The allocation of manpower and equipment necessary for the completion of an activity as scheduled.

1.4 INFORMATIONAL SUBMITTALS

A. Format for Submittals: Submit required submittals in the following format:

1. PDF electronic file.

B. Contractor's Construction Schedule: Initial schedule, of size required to display entire schedule for entire construction period.

1. Submit a working electronic copy of schedule, using software indicated, and labeled to comply with requirements for submittals. Include type of schedule (initial or updated) and date on label.

C. Daily Construction Reports: Submit at weekly intervals.

D. Material Location Reports: Submit at weekly intervals.

E. Field Condition Reports: Submit at time of discovery of differing conditions.

1.5 QUALITY ASSURANCE

A. Prescheduling Conference: Conduct conference at Project site to comply with requirements in Section 013100 "Project Management and Coordination." Review methods and procedures related to the Contractor's construction schedule, including, but not limited to, the following:

1. Review software limitations and content and format for reports.
2. Discuss constraints, including phasing, work stages and area separations.
3. Review delivery dates for Owner-furnished products.
4. Review schedule for work of Owner's separate contracts.
5. Review time required for review of submittals and resubmittals.
6. Review requirements for tests and inspections by independent testing and inspecting agencies.
7. Review time required for completion and startup procedures.
8. Review and finalize list of construction activities to be included in schedule.
9. Review submittal requirements and procedures.
10. Review procedures for updating schedule.

1.6 COORDINATION

A. Coordinate preparation and processing of schedules and reports with performance of construction activities and with scheduling and reporting of separate contractors.

B. Coordinate Contractor's construction schedule with the schedule of values, list of subcontracts, submittal schedule, progress reports, payment requests, and other required schedules and reports.

1. Secure time commitments for performing critical elements of the Work from entities involved.
2. Coordinate each construction activity in the network with other activities and schedule them in proper sequence.

PART 2 - PRODUCTS

2.1 CONTRACTOR'S CONSTRUCTION SCHEDULE, GENERAL

A. Time Frame: Extend schedule from date established for the Notice to Proceed to date of Substantial Completion.

1. Contract completion date shall not be changed by submission of a schedule that shows an early completion date, unless specifically authorized by Change Order.

B. Activities: Treat each story or separate area as a separate numbered activity for each principal element of the Work. Comply with the following:

1. Activity Duration: Define activities so no activity is longer than twenty (20) days, unless specifically allowed by Architect.
2. Procurement Activities: Include procurement process activities for the following long lead items and major items, requiring a cycle of more than sixty (60) days, as separate activities in schedule. Procurement cycle activities include, but are not limited to, submittals, approvals, purchasing, fabrication, and delivery.
3. Submittal Review Time: Include review and resubmittal times indicated in Section 013300 "Submittal Procedures" in schedule. Coordinate submittal review times in Contractor's construction schedule with submittal schedule.
4. Startup and Testing Time: Include not less than fifteen (15) days for startup and testing.
5. Substantial Completion: Indicate completion in advance of date established for Substantial Completion and allow time for Architect's administrative procedures necessary for certification of Substantial Completion.
6. Punch List and Final Completion: Include not more than thirty (30) days for punch list and final completion.

C. Constraints: Include constraints and work restrictions indicated in the Contract Documents and as follows in schedule and show how the sequence of the Work is affected.

1. Phasing: Arrange list of activities on schedule by phase.
2. Work Restrictions: Show the effect of the following items on the schedule:

a. Coordination with existing construction.
b. Uninterruptible services.
c. Use of premises restrictions.
d. Provisions for future construction.
e. Seasonal variations.
f. Environmental control.

3. Work Stages: Indicate important stages of construction for each major portion of the Work, including, but not limited to, the following:

    a. Subcontract awards.
    b. Submittals.
    c. Purchases.
    d. Mockups.
    e. Fabrication.
    f. Sample testing.
    g. Deliveries.
    h. Installation.
    i. Tests and inspections.
    j. Adjusting.
    k. Startup and placement into final use and operation.

4. Construction Areas: Identify each major area of construction for each major portion of the Work. Indicate where each construction activity within a major area must be sequenced or integrated with other construction activities to provide for the following:

    a. Completion of mechanical installation.
    b. Completion of electrical installation.
    c. Substantial Completion.

D. Milestones: Include milestones indicated in the Contract Documents in schedule, including, but not limited to, the Notice to Proceed, Substantial Completion, and final completion**.**

E. Cost Correlation: At the head of schedule, provide a cost correlation line, indicating planned and actual costs. On the line, show dollar volume of the Work performed as of dates used for preparation of payment requests.

1. Refer to Section 012900 "Payment Procedures" for cost reporting and payment procedures.

F. Upcoming Work Summary: Prepare summary report indicating activities scheduled to occur or commence prior to submittal of next schedule update. Summarize the following issues:

1. Unresolved issues.
2. Unanswered RFIs.
3. Rejected or unreturned submittals.
4. Notations on returned submittals.

G. Recovery Schedule: When periodic update indicates the Work is fourteen (14) or more calendar days behind the current approved schedule, submit a separate recovery schedule indicating means by which Contractor intends to regain compliance with the schedule. Indicate changes to working hours, working days, crew sizes, and equipment required to achieve compliance, and date by which recovery will be accomplished.

H. Computer Scheduling Software: Prepare schedules using current version of a program that has been developed specifically to manage construction schedules.

2.2 CONTRACTOR'S CONSTRUCTION SCHEDULE (GANTT CHART)

A. Gantt-Chart Schedule: Submit a comprehensive, fully developed, horizontal Gantt-chart-type, Contractor's construction schedule within seven (7) days of date established for the Notice to Proceed.

B. Preparation: Indicate each significant construction activity separately. Identify first workday of each week with a continuous vertical line.

1. For construction activities that require three months or longer to complete, indicate an estimated completion percentage in ten percent (10%) increments within time bar.

2.3 REPORTS

A. Daily Construction Reports: Prepare a daily construction report recording the following information concerning events at Project site:

1. List of subcontractors at Project site.
2. List of separate contractors at Project site.
3. Approximate count of personnel at Project site.
4. Equipment at Project site.
5. Material deliveries.
6. High and low temperatures and general weather conditions, including presence of rain or snow.
7. Accidents.
8. Meetings and significant decisions.
9. Stoppages, delays, shortages, and losses.
10. Meter readings and similar recordings.
11. Emergency procedures.
12. Orders and requests of authorities having jurisdiction.
13. Change Orders received and implemented.
14. Construction Change Directives received and implemented.
15. Services connected and disconnected.
16. Equipment or system tests and startups.
17. Partial completions and occupancies.
18. Substantial Completions authorized.

B. Material Location Reports: At weekly intervals, prepare and submit a comprehensive list of materials delivered to and stored at Project site. List shall be cumulative, showing materials previously reported plus items recently delivered. Include with list a statement of progress on and delivery dates for materials or items of equipment fabricated or stored away from Project site.

C. Field Condition Reports: Immediately on discovery of a difference between field conditions and the Contract Documents, prepare and submit a detailed report. Submit with a Request for Information. Include a detailed description of the differing conditions, together with recommendations for changing the Contract Documents.

PART 3 - EXECUTION

3.1 CONTRACTOR'S CONSTRUCTION SCHEDULE

A. Contractor's Construction Schedule Updating: At monthly intervals, update schedule to reflect actual construction progress and activities. Issue schedule one (1) week before each regularly scheduled progress meeting.

1. Revise schedule immediately after each meeting or other activity where revisions have been recognized or made. Issue updated schedule concurrently with the report of each such meeting.
2. Include a report with updated schedule that indicates every change, including, but not limited to, changes in logic, durations, actual starts and finishes, and activity durations.
3. As the Work progresses, indicate final completion percentage for each activity.

B. Distribution: Distribute copies of approved schedule to Architect, Construction Administrator, Owner, separate contractors, testing and inspecting agencies, and other parties identified by Contractor with a need-to-know schedule responsibility.

1. Post copies in Project meeting rooms and temporary field offices.
2. When revisions are made, distribute updated schedules to the same parties and post in the same locations. Delete parties from distribution when they have completed their assigned portion of the Work and are no longer involved in performance of construction activities.

END OF SECTION 013200

SECTION 013233 - PHOTOGRAPHIC DOCUMENTATION

PART 1 - GENERAL

1.1 RELATED DOCUMENTS

A. Drawings and general provisions of the Contract, including General and Supplementary Conditions and other Division 01 Specification Sections, apply to this Section.

1.2 SUMMARY

A. Section includes administrative and procedural requirements for the following:

1. Periodic construction photographs.
2. Construction webcam.

B. Related Sections:

1. Section 013300 "Submittal Procedures" for submitting photographic documentation.
2. Section 017700 "Closeout Procedures" for submitting photographic documentation as project record documents at Project closeout.

1.3 INFORMATIONAL SUBMITTALS

A. Key Plan: Submit key plan of Project site and building with notation of vantage points marked for location and direction of each photograph. Indicate elevation or story of construction. Include same information as corresponding photographic documentation.

B. Digital Photographs: Submit image files within three (3) days of taking photographs.

1. Submit photos by uploading to web-based Project management software site. Include copy of key plan indicating each photograph's location and direction.

C. Time-Lapse Video: Submit time-lapse sequence video recordings within three (3) days of recording.

1. Submit time-lapse sequence video recordings monthly by uploading to web-based Project management software site.

1.4 QUALITY ASSURANCE

A. Construction Webcam Service Provider: A firm specializing in providing photographic equipment, web-based software, and related services for construction projects, with a record of providing satisfactory services similar to those required for Project.

1.5 FORMATS AND MEDIA

A. Digital Photographs: Provide color images in JPG format, produced by a digital camera with minimum sensor size of 12 megapixels, and at an image resolution of not less than 3200 by 2400 pixels. Use flash in low light levels or backlit conditions.

B. Digital Images: Submit digital media as originally recorded in the digital camera, without alteration, manipulation, editing, or modifications using image-editing software.

C. Metadata: Record accurate date and time from camera.

D. File Names: Name media files with date, Project area, and sequential numbering suffix.

1.6 CONSTRUCTION PHOTOGRAPHS

A. General: Take photographs using the maximum depth of field and in focus. Photographs with blurry or out-of-focus areas will not be accepted.

1. Maintain key plan with each set of construction photographs that identifies each photographic location.
2. Field Office Images: Maintain one (1) set of images accessible in the field office at Project site, available at all times for reference. Identify images in the same manner as those submitted to Architect.

B. Periodic Construction Photographs: Take eighteen to twenty (18-20) photographs weekly, coinciding with the cutoff date associated with each Application for Payment. Select vantage points to show status of construction and progress since last photographs were taken.

C. Additional Photographs: Architect may request photographs in addition to periodic photographs specified.

1. In emergency situations, take additional photographs within 24 hours of request.
2. Circumstances that could require additional photographs include, but are not limited to, the following:

a. Immediate follow-up when on-site events result in construction damage or losses.
b. Substantial Completion of a major phase or component of the Work.

1.7 CONSTRUCTION WEBCAM

A. Webcam: Provide one (1) fixed-location camera with weatherproof housing, mounted to provide unobstructed view of construction site from location approved by Architect, with the following characteristics:

1. Remotely controllable view with mouse-click user navigation for horizontal pan, vertical tile, and optical zoom of five hundred percent (500%) minimum.
2. Capable of producing minimum 12-megapixel images.
3. Provide pole mount, power supply, active high-speed data connection to service provider's network, and static public IP address for each camera.

B. Live Streaming: Provide web-accessible live feed of site when construction is underway.

C. Web-Based Interface: Provide online interface to allow viewing of each high-definition digital still image captured and stored during construction, from the Internet.

1. Access Control: Provide password-protected access for Project team administered by Contractor, providing current image access and archival image access by date and time, with images downloadable to viewer's device.
2. Software: Provide responsive software interface for use on computer, tablet, and mobile screens with accompanying iPhone/iPad app and Android apps.
3. Storage: Maintain images on the website for reference during entire construction period, and for not less than thirty (30) days after Final Completion. Provide sufficient memory on remote server to store all Project images.
4. Online Interface: Provide website interface with Project and client information and logos, calendar-based navigation interface for selecting images, and pan and zoom capability within high-definition images.
5. Forward and Reverse: Provide capability to browse through images, moving forward and backward in time by individual image and by day.
6. Time-Lapse: Provide capability for online display of project time-lapse.
7. Dashboard: Provide capability to view thumbnails of all cameras on one (1) screen.
8. Weather: Provide corresponding weather data for each image captured.
9. Provide public viewer open access to most recent Project camera image.

D. Maintain cameras and web-based access in good working order, according to web-based construction photographic documentation service provider's written instructions until Final Completion. Provide for service of cameras and related networking devices and software.

PART 2 - PRODUCTS (Not Used)

PART 3 - EXECUTION (Not Used)

END OF SECTION 013233

SECTION 013300 - SUBMITTAL PROCEDURES

PART 1 - GENERAL

1.1 RELATED DOCUMENTS

A. Drawings and general provisions of the Contract, including General and Supplementary Conditions and other Division 01 Specification Sections, apply to this Section.

1.2 SUMMARY

A. Section includes requirements for the submittal schedule and administrative and procedural requirements for submitting Shop Drawings, Product Data, Samples, and other submittals.

B. Related Sections:

1. Section 012900 "Payment Procedures" for submitting Applications for Payment and the schedule of values.
2. Section 013200 "Construction Progress Documentation" for submitting schedules and reports, including Contractor's construction schedule.
3. Section 017823 "Operation and Maintenance Data" for submitting operation and maintenance manuals.
4. Section 017839 "Project Record Documents" for submitting record Drawings, record Specifications, and record Product Data.

1.3 DEFINITIONS

A. Action Submittals: Written and graphic information and physical samples that require Architect's responsive action. Action submittals are those submittals indicated in individual Specification Sections as action submittals.

B. Informational Submittals: Written and graphic information and physical samples that do not require Architect's responsive action. Submittals may be rejected for not complying with requirements. Informational submittals are those submittals indicated in individual Specification Sections as informational submittals.

C. File Transfer Protocol (FTP): Communications protocol that enables transfer of files to and from another computer over a network and that serves as the basis for standard Internet protocols. An FTP site is a portion of a network located outside of network firewalls within which internal and external users are able to access files.

D. Portable Document Format (PDF): An open standard file format licensed by Adobe Systems used for representing documents in a device-independent and display resolution-independent fixed-layout document format.

1.4 ACTION SUBMITTALS

A. Submittal Schedule: Submit a schedule of submittals, arranged in chronological order by dates required by construction schedule. Include time required for review, ordering, manufacturing, fabrication, and delivery when establishing dates. Include additional time required for making

corrections or modifications to submittals noted by the Architect and additional time for handling and reviewing submittals required by those corrections.

1. Coordinate submittal schedule with list of subcontracts, the schedule of values, and Contractor's construction schedule.
2. Submit concurrently with Contractor's construction schedule. Include submittals required during the first sixty (60) days of construction. List those submittals required to maintain orderly progress of the Work and those required early because of long lead time for manufacture or fabrication.
3. Format: Arrange the following information in a tabular format:

    a. Scheduled date for first submittal.
    b. Specification Section number and title.
    c. Submittal Category: Action, informational.
    d. Name of subcontractor.
    e. Description of the Work covered.
    f. Scheduled date for Architect's final release or approval.
    g. Scheduled dates for purchasing.
    h. Scheduled dates for installation.

1.5 SUBMITTAL ADMINISTRATIVE REQUIREMENTS

A. Architect's Digital Data Files: Electronic copies of the Building Information Model (BIM) of the Contract Drawings will **not** be provided by Architect for Contractor's use in preparing submittals unless requested and Architect's user agreement properly completed.

B. Coordination: Coordinate preparation and processing of submittals with performance of construction activities.

1. Coordinate each submittal with fabrication, purchasing, testing, delivery, other submittals, and related activities that require sequential activity.
2. Submit all submittal items required for each Specification Section concurrently unless partial submittals for portions of the Work are indicated on approved submittal schedule.
3. Submit action submittals and informational submittals required by the same Specification Section as separate packages under separate transmittals.
4. Coordinate transmittal of different types of submittals for related parts of the Work so processing will not be delayed because of need to review submittals concurrently for coordination.

    a. Architect reserves the right to withhold action on a submittal requiring coordination with other submittals until related submittals are received.

C. Processing Time: Allow time for submittal review, including time for resubmittals, as follows. Time for review shall commence on Architect's receipt of submittal. No extension of the Contract Time will be authorized because of failure to transmit submittals enough in advance of the Work to permit processing, including resubmittals.

1. Initial Review: Allow seven (7) days for initial review of each submittal. Allow additional time if coordination with subsequent submittals is required. Architect will advise Contractor when a submittal being processed must be delayed for coordination.
2. Resubmittal Review: Allow five (5) days for review of each resubmittal.

3. Sequential Review: Where sequential review of submittals by Architect's consultants, Owner, or other parties is indicated, allow seven (7) days for initial review of each submittal.

D. Identification and Information: Place a permanent label or title block on each paper copy submittal item for identification.

1. Indicate name of firm or entity that prepared each submittal on label or title block.
2. Provide a space on label or beside title block to record Contractor's review and approval markings and action taken by Architect.
3. Include the following information for processing and recording action taken:

a. Project name.
b. Date.
c. Name of Architect.
d. Name of Contractor.
e. Name of subcontractor.
f. Name of supplier.
g. Name of manufacturer.
h. Submittal number or other unique identifier, including revision identifier.

1) Submittal number shall use Specification Section number followed by a decimal point and then a sequential number (e.g., 061000.01). Resubmittals shall include an alphabetic suffix after another decimal point (e.g., 061000.01.A).

i. Number and title of appropriate Specification Section.
j. Drawing number and detail references, as appropriate.
k. Location(s) where product is to be installed, as appropriate.
l. Other necessary identification.

E. Identification and Information: Identify and incorporate information in each electronic submittal file as follows:

1. Assemble complete submittal package into a single indexed file with links enabling navigation to each item.
2. Name file with submittal number or other unique identifier, including revision identifier.

a. File name shall use project identifier and Specification Section number followed by a decimal point and then a sequential number (e.g., LNHS-061000.01). Resubmittals shall include an alphabetic suffix after another decimal point (e.g., LNHS-061000.01.A).

3. Provide means for insertion to permanently record Contractor's review and approval markings and action taken by Architect.
4. Include the following information on an inserted cover sheet:

a. Project name.
b. Date.
c. Name and address of Architect.
d. Name of Contractor.

e. Name of firm or entity that prepared submittal.
f. Name of subcontractor.
g. Name of supplier.
h. Name of manufacturer.
i. Number and title of appropriate Specification Section.
j. Drawing number and detail references, as appropriate.
k. Location(s) where product is to be installed, as appropriate.
l. Related physical samples submitted directly.
m. Other necessary identification.

5. Include the following information as keywords in the electronic file metadata:

a. Project name.
b. Number and title of appropriate Specification Section.
c. Manufacturer name.
d. Product name.

F. Options: Identify options requiring selection by the Architect.

G. Deviations: Identify deviations from the Contract Documents on submittals.

H. Additional Paper Copies: Unless additional copies are required for final submittal, and unless Architect observes noncompliance with provisions in the Contract Documents, initial submittal may serve as final submittal.

I. Transmittal: Assemble each submittal individually and appropriately for transmittal and handling. Transmit each submittal using a transmittal form. Architect will return submittals, without review received from sources other than Contractor.

1. Transmittal Form: Provide locations on form for the following information:

a. Project name.
b. Date.
c. Destination (To:).
d. Source (From:).
e. Names of subcontractor, manufacturer, and supplier.
f. Category and type of submittal.
g. Submittal purpose and description.
h. Specification Section number and title.
i. Indication of full or partial submittal.
j. Drawing number and detail references, as appropriate.
k. Transmittal number, numbered consecutively.
l. Submittal and transmittal distribution record.
m. Remarks.
n. Signature of transmitter.

2. On an attached separate sheet, prepared on Contractor's letterhead, record relevant information, requests for data, revisions other than those requested by Architect on previous submittals, and deviations from requirements in the Contract Documents, including minor variations and limitations. Include same identification information as related submittal.

J. Resubmittals: Make resubmittals in same form and number of copies as initial submittal.

1. Note date and content of previous submittal.
2. Note date and content of revision in label or title block and clearly indicate extent of revision.
3. Resubmit submittals until they are marked with approval notation from Architect's action stamp.

K. Distribution: Furnish copies of final submittals to manufacturers, subcontractors, suppliers, fabricators, installers, authorities having jurisdiction, and others as necessary for performance of construction activities. Show distribution on transmittal forms.

L. Use for Construction: Use only final submittals that are marked with approval notation from Architect's action stamp.

PART 2 - PRODUCTS

2.1 SUBMITTAL PROCEDURES

A. General Submittal Procedure Requirements: Prepare and submit submittals required by individual Specification Sections. Types of submittals are indicated in individual Specification Sections.

1. Submit electronic submittals via email as PDF electronic files.

   a. Architect will return annotated file. Annotate and retain one (1) copy of file as an electronic Project record document file.

2. Closeout Submittals and Maintenance Material Submittals: Comply with requirements specified in Section 017700 "Closeout Procedures."
3. Certificates and Certifications Submittals: Provide a statement that includes signature of entity responsible for preparing certification. Certificates and certifications shall be signed by an officer or other individual authorized to sign documents on behalf of that entity.

   a. Provide a digital signature with digital certificate on electronically submitted certificates and certifications where indicated.
   b. Provide a notarized statement on original paper copy certificates and certifications where indicated.

4. Test and Inspection Reports Submittals: Comply with requirements specified in Section 014000 "Quality Requirements."

B. Product Data: Collect information into a single submittal for each element of construction and type of product or equipment.

1. If information must be specially prepared for submittal because standard published data are not suitable for use, submit as Shop Drawings, not as Product Data.
2. Mark each copy of each submittal to show which products and options are applicable.
3. Include the following information, as applicable:

a. Manufacturer's catalog cuts.
b. Manufacturer's product specifications.
c. Standard color charts.
d. Statement of compliance with specified referenced standards.
e. Testing by recognized testing agency.
f. Application of testing agency labels and seals.
g. Notation of coordination requirements.
h. Availability and delivery time information.

4. For equipment, include the following in addition to the above, as applicable:

a. Wiring diagrams showing factory-installed wiring.
b. Printed performance curves.
c. Operational range diagrams.
d. Clearances required to other construction, if not indicated on accompanying Shop Drawings.

5. Submit Product Data before or concurrent with Samples.

C. Shop Drawings: Prepare Project-specific information, drawn accurately to scale. Do not base Shop Drawings on reproductions of the Contract Documents or standard printed data.

1. Preparation: Fully illustrate requirements in the Contract Documents. Include the following information, as applicable:

a. Identification of products.
b. Schedules.
c. Compliance with specified standards.
d. Notation of coordination requirements.
e. Notation of dimensions established by field measurement.
f. Relationship and attachment to adjoining construction clearly indicated.
g. Seal and signature of professional engineer if specified.

2. Sheet Size: Except for templates, patterns, and similar full-size drawings, submit Shop Drawings on sheets at least 8½ by 11 inches but no larger than 30 by 42 inches.

D. Samples: Submit Samples for review of kind, color, pattern, and texture for a check of these characteristics with other elements and for a comparison of these characteristics between submittal and actual component as delivered and installed.

1. Transmit Samples that contain multiple, related components such as accessories together in one (1) submittal package.
2. Identification: Attach label on unexposed side of Samples that includes the following:

a. Generic description of Sample.
b. Product name and name of manufacturer.
c. Sample source.
d. Number and title of applicable Specification Section.

3. Disposition: Maintain sets of approved Samples at Project site, available for quality-control comparisons throughout the course of construction activity. Sample sets may be used to determine final acceptance of construction associated with each set.

    a. Samples that may be incorporated into the Work are indicated in individual Specification Sections. Such Samples must be in an undamaged condition at time of use.
    b. Samples not incorporated into the Work, or otherwise designated as Owner's property, are the property of Contractor.

E. Product Schedule: As required in individual Specification Sections, prepare a written summary indicating types of products required for the Work and their intended location. Include the following information in tabular form:

1. Type of product. Include unique identifier for each product indicated in the Contract Documents.
2. Manufacturer and product name, and model number if applicable.
3. Number and name of room or space.
4. Location within room or space.

F. Contractor's Construction Schedule: Comply with requirements specified in Section 013200 "Construction Progress Documentation."

G. Application for Payment: Comply with requirements specified in Section 012900 "Payment Procedures."

H. Schedule of Values: Comply with requirements specified in Section 012900 "Payment Procedures."

I. Subcontract List: Prepare a written summary identifying individuals or firms proposed for each portion of the Work, including those who are to furnish products or equipment fabricated to a special design**.** Include the following information in tabular form:

1. Name, address, and telephone number of entity performing subcontract or supplying products.
2. Number and title of related Specification Section(s) covered by subcontract.
3. Drawing number and detail references, as appropriate, covered by subcontract.

J. Qualification Data: Prepare written information that demonstrates capabilities and experience of firm or person. Include lists of completed projects with project names and addresses, contact information of Architects and Owners, and other information specified.

K. Welding Certificates: Prepare written certification that welding procedures and personnel comply with requirements in the Contract Documents. Submit record of Welding Procedure Specification and Procedure Qualification Record on American Welding Society (AWS) forms. Include names of firms and personnel certified.

L. Installer Certificates: Submit written statements on manufacturer's letterhead certifying that Installer complies with requirements in the Contract Documents and, where required, is authorized by manufacturer for this specific Project.

M. Manufacturer Certificates: Submit written statements on manufacturer's letterhead certifying that manufacturer complies with requirements in the Contract Documents. Include evidence of manufacturing experience where required.

N. Product Certificates: Submit written statements on manufacturer's letterhead certifying that product complies with requirements in the Contract Documents.

O. Material Certificates: Submit written statements on manufacturer's letterhead certifying that material complies with requirements in the Contract Documents.

P. Material Test Reports: Submit reports written by a qualified testing agency, on testing agency's standard form, indicating and interpreting test results of material for compliance with requirements in the Contract Documents.

Q. Product Test Reports: Submit written reports indicating current product produced by manufacturer complies with requirements in the Contract Documents. Base reports on evaluation of tests performed by manufacturer and witnessed by a qualified testing agency, or on comprehensive tests performed by a qualified testing agency.

R. Research Reports: Submit written evidence, from a model code organization acceptable to authorities having jurisdiction, that product complies with building code in effect for Project. Include the following information:

1. Name of evaluation organization.
2. Date of evaluation.
3. Time period when report is in effect.
4. Product and manufacturers' names.
5. Description of product.
6. Test procedures and results.
7. Limitations of use.

S. Schedule of Tests and Inspections: Comply with requirements specified in Section 014000 "Quality Requirements."

T. Preconstruction Test Reports: Submit reports written by a qualified testing agency, on testing agency's standard form, indicating and interpreting results of tests performed before installation of product, for compliance with performance requirements in the Contract Documents.

U. Compatibility Test Reports: Submit reports written by a qualified testing agency, on testing agency's standard form, indicating and interpreting results of compatibility tests performed before installation of product. Include written recommendations for primers and substrate preparation needed for adhesion.

V. Field Test Reports: Submit reports indicating and interpreting results of field tests performed either during installation of product or after product is installed in its final location, for compliance with requirements in the Contract Documents.

W. Maintenance Data: Comply with requirements specified in Section 017823 "Operation and Maintenance Data."

PART 3 - EXECUTION

3.1 CONTRACTOR'S REVIEW

A. Action and Informational Submittals: Review each submittal and check for coordination with other Work of the Contract and for compliance with the Contract Documents. Note corrections and field dimensions. Mark with approval stamp before submitting to Architect.

B. Project Closeout and Maintenance/Material Submittals: Refer to requirements in Section 017700 "Closeout Procedures."

C. Approval Stamp: Stamp each submittal with a uniform, approval stamp. Include Project name and location, submittal number, Specification Section title and number, name of reviewer, date of Contractor's approval, and statement certifying that submittal has been reviewed, checked, and approved for compliance with the Contract Documents.

3.2 ARCHITECT'S ACTION

A. General: Architect will not review submittals that do not bear Contractor's approval stamp and will return them without action.

B. Action Submittals: Architect will review each submittal, make marks to indicate corrections or modifications required, and return it. Architect will stamp each submittal with an action stamp and will mark stamp appropriately to indicate action.

C. Informational Submittals: Architect will review each submittal and will not return it or will return it if it does not comply with requirements. Architect will forward each submittal to appropriate party.

D. Partial submittals prepared for a portion of the Work will be reviewed when use of partial submittals has received prior approval from Architect.

E. Incomplete submittals are not acceptable, will be considered nonresponsive, and will be returned without review.

F. Submittals not required by the Contract Documents may not be reviewed and may be discarded.

END OF SECTION 013300

SECTION 014000 - QUALITY REQUIREMENTS

PART 1 - GENERAL

1.1 RELATED DOCUMENTS

A. Drawings and general provisions of the Contract, including General and Supplementary Conditions and other Division 01 Specification Sections, apply to this Section.

1.2 SUMMARY

A. Section includes administrative and procedural requirements for quality assurance and quality control.

B. Testing and inspecting services are required to verify compliance with requirements specified or indicated. These services do not relieve Contractor of responsibility for compliance with the Contract Document requirements.

1. Specific quality-assurance and -control requirements for individual work results are specified in their respective Specification Sections. Requirements in individual Sections may also cover production of standard products.
2. Specified tests, inspections, and related actions do not limit Contractor's other quality-assurance and quality-control procedures that facilitate compliance with the Contract Document requirements.
3. Requirements for Contractor to provide quality-assurance and quality-control services required by Architect, Owner, or authorities having jurisdiction are not limited by provisions of this Section.

C. Related Sections:

1. Divisions 02 through 49 Sections for specific test and inspection requirements.

1.3 DEFINITIONS

A. Quality-Assurance Services: Activities, actions, and procedures performed before and during execution of the Work to guard against defects and deficiencies and substantiate that proposed construction will comply with requirements.

B. Quality-Control Services: Tests, inspections, procedures, and related actions during and after execution of the Work to evaluate that actual products incorporated into the Work and completed construction comply with requirements. Contractor’s quality-control services do not include contract enforcement activities performed by Architect.

C. Mockups: Full-size physical assemblies that are constructed on-site either as freestanding temporary built elements or as part of permanent construction. Mockups are constructed to verify selections made under sample submittals; to demonstrate aesthetic effects and qualities of materials and execution; to review coordination, testing, or operation; to show interface between dissimilar materials; and to demonstrate compliance with specified installation tolerances.

Mockups are not Samples. Unless otherwise indicated, approved mockups establish the standard by which the Work will be judged.

D. Preconstruction Testing: Tests and inspections performed specifically for the Project before products and materials are incorporated into the Work, to verify performance or compliance with specified criteria.

E. Product Tests: Tests and inspections that are performed by a nationally recognized testing laboratory (NRTL) according to 29 CFR 1910.7, by a testing agency accredited according to NIST's National Voluntary Laboratory Accreditation Program (NVLAP), or by a testing agency qualified to conduct product testing and acceptable to authorities having jurisdiction, to establish product performance and compliance with specified requirements.

F. Source Quality-Control Tests: Tests and inspections that are performed at the source; for example, plant, mill, factory, or shop.

G. Field Quality-Control Tests: Tests and inspections that are performed on-site for installation of the Work and for completed Work.

H. Testing Agency: An entity engaged to perform specific tests, inspections, or both. Testing laboratory shall mean the same as testing agency.

I. Installer/Applicator/Erector: Contractor or another entity engaged by Contractor as an employee, Subcontractor, or Sub-subcontractor, to perform a particular construction operation, including installation, erection, application, and similar operations.

1. Use of trade-specific terminology in referring to a trade or entity does not require that certain construction activities be performed by accredited or unionized individuals, or that requirements specified apply exclusively to specific trade or trades.

J. Experienced: When used with an entity or individual, "experienced" unless otherwise further described means having successfully completed a minimum of five (5) previous projects similar in nature, size, and extent to this Project; being familiar with special requirements indicated; and having complied with requirements of authorities having jurisdiction.

1.4 DELEGATED-DESIGN SERVICES

A. Performance and Design Criteria: Where professional design services or certifications by a design professional are specifically required of Contractor by the Contract Documents, provide products and systems complying with specific performance and design criteria indicated.

1. If criteria indicated are not sufficient to perform services or certification required, submit a written request for additional information to Architect.

1.5 CONFLICTING REQUIREMENTS

A. Conflicting Standards and Other Requirements: If compliance with two (2) or more standards or requirements are specified and the standards or requirements establish different or conflicting requirements for minimum quantities or quality levels, comply with the most stringent requirement. Refer conflicting requirements that are different, but apparently equal, to Architect for direction before proceeding.

B. Minimum Quantity or Quality Levels: The quantity or quality level shown or specified shall be the minimum provided or performed. The actual installation may comply exactly with the minimum quantity or quality specified, or it may exceed the minimum within reasonable limits. To comply with these requirements, indicated numeric values are minimum or maximum, as appropriate, for the context of requirements. Refer uncertainties to Architect for a decision before proceeding.

1.6 ACTION SUBMITTALS

A. Shop Drawings: For mockups.

1. Include plans, sections, and elevations, indicating materials and size of mockup construction.
2. Indicate manufacturer and model number of individual components.
3. Provide axonometric drawings for conditions difficult to illustrate in two (2) dimensions.

B. Delegated-Design Services Submittal: In addition to Shop Drawings, Product Data, and other required submittals, submit a statement signed and sealed by the responsible design professional, for each product and system specifically assigned to Contractor to be designed or certified by a design professional, indicating that the products and systems are in compliance with performance and design criteria indicated. Include list of codes, loads, and other factors used in performing these services.

1.7 INFORMATIONAL SUBMITTALS

A. Contractor's Statement of Responsibility: When required by authorities having jurisdiction, submit copy of written statement of responsibility submitted to authorities having jurisdiction before starting work on the following systems.

1. Seismic-force-resisting system, designated seismic system, or component listed in the Statement of Special Inspections.
2. Main wind-force-resisting system or a wind-resisting component listed in the Statement of Special Inspections.

B. Testing Agency Qualifications: For testing agencies specified in "Quality Assurance" Article to demonstrate their capabilities and experience. Include proof of qualifications in the form of a recent report on the inspection of the testing agency by a recognized authority.

C. Schedule of Tests and Inspections: Prepare in tabular form and include the following:

1. Specification Section number and title.
2. Entity responsible for performing tests and inspections.
3. Description of test and inspection.
4. Identification of applicable standards.
5. Identification of test and inspection methods.
6. Number of tests and inspections required.
7. Time schedule or time span for tests and inspections.
8. Requirements for obtaining samples.
9. Unique characteristics of each quality-control service.

D. Reports: Prepare and submit certified written reports and documents as specified.

E. Permits, Licenses, and Certificates: For Owner's record, submit copies of permits, licenses, certifications, inspection reports, releases, jurisdictional settlements, notices, receipts for fee payments, judgments, correspondence, records, and similar documents established for compliance with standards and regulations bearing on performance of the Work.

1.8 CONTRACTOR'S QUALITY-CONTROL PLAN

A. Quality-Control Plan, General: Submit quality-control plan within ten (10) days of Notice to Proceed, and not less than five (5) days prior to preconstruction conference. Submit in format acceptable to Architect. Identify personnel, procedures, controls, instructions, tests, records, and forms to be used to carry out Contractor's quality-assurance and quality-control responsibilities. Coordinate with Contractor's construction schedule.

B. Quality-Control Personnel Qualifications: Engage qualified full-time personnel trained and experienced in managing and executing quality-assurance and quality-control procedures similar in nature and extent to those required for Project.

C. Submittal Procedure: Describe procedures for ensuring compliance with requirements through review and management of submittal process. Indicate qualifications of personnel responsible for submittal review.

D. Testing and Inspection: Include in quality-control plan a comprehensive schedule of Work requiring testing or inspection, including the following:

1. Contractor-performed tests and inspections including subcontractor-performed tests and inspections. Include required tests and inspections and Contractor-elected tests and inspections.
2. Special inspections required by authorities having jurisdiction and indicated on the "Statement of Special Inspections."
3. Owner-performed tests and inspections indicated in the Contract Documents.

E. Continuous Inspection of Workmanship: Describe process for continuous inspection during construction to identify and correct deficiencies in workmanship in addition to testing and inspection specified. Indicate types of corrective actions to be required to bring work into compliance with standards of workmanship established by Contract requirements and approved mockups.

F. Monitoring and Documentation: Maintain testing and inspection reports including log of approved and rejected results. Include work Architect has indicated as nonconforming or defective. Indicate corrective actions taken to bring nonconforming work into compliance with requirements. Comply with requirements of authorities having jurisdiction.

1.9 REPORTS AND DOCUMENTS

A. Test and Inspection Reports: Prepare and submit certified written reports specified in other Sections. Include the following:

1. Date of issue.
2. Project title and number.
3. Name, address, and telephone number of testing agency.
4. Dates and locations of samples and tests or inspections.

5. Names of individuals making tests and inspections.
6. Description of the Work and test and inspection method.
7. Identification of product and Specification Section.
8. Complete test or inspection data.
9. Test and inspection results and an interpretation of test results.
10. Record of temperature and weather conditions at time of sample taking and testing and inspecting.
11. Comments or professional opinion on whether tested or inspected Work complies with the Contract Document requirements.
12. Name and signature of laboratory inspector.
13. Recommendations on retesting and reinspecting.

B. Manufacturer's Technical Representative's Field Reports: Prepare written information documenting manufacturer's technical representative's tests and inspections specified in other Sections. Include the following:

1. Name, address, and telephone number of technical representative making report.
2. Statement on condition of substrates and their acceptability for installation of product.
3. Statement that products at Project site comply with requirements.
4. Summary of installation procedures being followed, whether they comply with requirements and, if not, what corrective action was taken.
5. Results of operational and other tests and a statement of whether observed performance complies with requirements.
6. Statement whether conditions, products, and installation will affect warranty.
7. Other required items indicated in individual Specification Sections.

C. Factory-Authorized Service Representative's Reports: Prepare written information documenting manufacturer's factory-authorized service representative's tests and inspections specified in other Sections. Include the following:

1. Name, address, and telephone number of factory-authorized service representative making report.
2. Statement that equipment complies with requirements.
3. Results of operational and other tests and a statement of whether observed performance complies with requirements.
4. Statement whether conditions, products, and installation will affect warranty.
5. Other required items indicated in individual Specification Sections.

1.10 QUALITY ASSURANCE

A. General: Qualifications paragraphs in this article establish the minimum qualification levels required; individual Specification Sections specify additional requirements.

B. Manufacturer Qualifications: A firm experienced in manufacturing products or systems similar to those indicated for this Project and with a record of successful in-service performance, as well as sufficient production capacity to produce required units. As applicable, procure products from manufacturers able to meet qualification requirements, warranty requirements, and technical or factory-authorized service representative requirements.

C. Fabricator Qualifications: A firm experienced in producing products similar to those indicated for this Project and with a record of successful in-service performance, as well as sufficient production capacity to produce required units.

D. Installer Qualifications: A firm or individual experienced in installing, erecting, applying, or assembling work similar in material, design, and extent to that indicated for this Project, whose work has resulted in construction with a record of successful in-service performance.

E. Professional Engineer Qualifications: A professional engineer who is legally qualified to practice in jurisdiction where Project is located and who is experienced in providing engineering services of the kind indicated. Engineering services are defined as those performed for installations of the system, assembly, or product that are similar in material, design, and extent to those indicated for this Project.

F. Specialists: Certain Specification Sections require that specific construction activities shall be performed by entities who are recognized experts in those operations. Specialists shall satisfy qualification requirements indicated and shall be engaged for the activities indicated.

1. Requirements of authorities having jurisdiction shall supersede requirements for specialists.

G. Testing Agency Qualifications: An NRTL, an NVLAP, or an independent agency with the experience and capability to conduct testing and inspecting indicated, as documented according to ASTM E 329; and with additional qualifications specified in individual Sections; and where required by authorities having jurisdiction, that is acceptable to authorities.

H. Manufacturer's Technical Representative Qualifications: An authorized representative of manufacturer who is trained and approved by manufacturer to observe and inspect installation of manufacturer's products that are similar in material, design, and extent to those indicated for this Project.

I. Factory-Authorized Service Representative Qualifications: An authorized representative of manufacturer who is trained and approved by manufacturer to inspect installation of manufacturer's products that are similar in material, design, and extent to those indicated for this Project.

J. Mockups: Before installing portions of the Work requiring mockups, build mockups for each form of construction and finish required to comply with the following requirements, using materials indicated for the completed Work:

1. Build mockups in location and of size indicated or, if not indicated, as directed by Architect.
2. Notify Architect seven (7) days in advance of dates and times when mockups will be constructed.
3. Employ supervisory personnel who will oversee mockup construction. Employ workers that will be employed during the construction at the Project.
4. Demonstrate the proposed range of aesthetic effects and workmanship.
5. Obtain Architect's approval of mockups before starting work, fabrication, or construction.

    a. Allow seven (7) days for initial review and each re-review of each mockup.

6. Maintain mockups during construction in an undisturbed condition as a standard for judging the completed Work.
7. Demolish and remove mockups when directed, unless otherwise indicated.

1.11 QUALITY CONTROL

A. Owner Responsibilities: Where quality-control services are indicated as Owner's responsibility, Owner will engage a qualified testing agency to perform these services.

1. Owner will furnish Contractor with names, addresses, and telephone numbers of testing agencies engaged and a description of types of testing and inspecting they are engaged to perform.
2. Costs for retesting and reinspecting construction that replaces or is necessitated by work that failed to comply with the Contract Documents will be charged to Contractor, and the Contract Sum will be adjusted by Change Order.
3. Costs for testing that is cancelled will be charged to the Contractor, and the Contract Sum will be adjusted by Change Order.

B. Contractor Responsibilities: Tests and inspections not explicitly assigned to Owner are Contractor's responsibility. Perform additional quality-control activities, whether specified or not, to verify that the Work complies with requirements.

1. Unless otherwise indicated, provide quality-control services specified and those required by authorities having jurisdiction. Perform quality-control services required of Contractor by authorities having jurisdiction, whether specified or not.
2. Engage a qualified testing agency to perform these quality-control services.

   a. Contractor shall not employ same entity engaged by Owner, unless agreed to in writing by Owner.

3. Notify testing agencies at least 24 hours in advance of time when Work that requires testing or inspecting will be performed.
4. Where quality-control services are indicated as Contractor's responsibility, submit a certified written report, in duplicate, of each quality-control service.
5. Testing and inspecting requested by Contractor and not required by the Contract Documents are Contractor's responsibility.
6. Submit additional copies of each written report directly to authorities having jurisdiction, when they so direct.

C. Manufacturer's Field Services: Where indicated, engage a factory-authorized service representative to inspect field-assembled components and equipment installation, including service connections. Report results in writing as specified in Section 013300 "Submittal Procedures."

D. Manufacturer's Technical Services: Where indicated, engage a manufacturer's technical representative to observe and inspect the Work. Manufacturer's technical representative's services include participation in preinstallation conferences, examination of substrates and conditions, verification of materials, observation of Installer activities, inspection of completed portions of the Work, and submittal of written reports.

E. Retesting/Reinspecting: Regardless of whether original tests or inspections were Contractor's responsibility, provide quality-control services, including retesting and reinspecting, for construction that replaced Work that failed to comply with the Contract Documents.

F. Testing Agency Responsibilities: Cooperate with Architect and Contractor in performance of duties. Provide qualified personnel to perform required tests and inspections.

1. Notify Architect and Contractor promptly of irregularities or deficiencies observed in the Work during performance of its services.
2. Determine the location from which test samples will be taken and in which in-situ tests are conducted.
3. Conduct and interpret tests and inspections and state in each report whether tested and inspected work complies with or deviates from requirements.
4. Submit a certified written report, in duplicate, of each test, inspection, and similar quality-control service through Contractor.
5. Do not release, revoke, alter, or increase the Contract Document requirements or approve or accept any portion of the Work.
6. Do not perform any duties of Contractor.

G. Associated Contractor Services: Cooperate with agencies and representatives performing required tests, inspections, and similar quality-control services, and provide reasonable auxiliary services as requested. Notify agency sufficiently in advance of operations to permit assignment of personnel. Provide the following:

1. Access to the Work.
2. Incidental labor and facilities necessary to facilitate tests and inspections.
3. Adequate quantities of representative samples of materials that require testing and inspection. Assist agency in obtaining samples.
4. Facilities for storage and field curing of test samples.
5. Delivery of samples to testing agencies.
6. Preliminary design mix proposed for use for material mixes that require control by testing agency.
7. Security and protection for samples and for testing and inspecting equipment at Project site.

H. Coordination: Coordinate sequence of activities to accommodate required quality-assurance and quality-control services with a minimum of delay and to avoid necessity of removing and replacing construction to accommodate testing and inspecting.

1. Schedule times for tests, inspections, obtaining samples, and similar activities.

1.12 SPECIAL TESTS AND INSPECTIONS

A. Special Tests and Inspections: Conducted by a qualified testing agency as required by authorities having jurisdiction, as indicated in individual Specification Sections, and as follows:

1. Verifying that manufacturer maintains detailed fabrication and quality-control procedures and reviewing the completeness and adequacy of those procedures to perform the Work.
2. Notifying Architect and Contractor promptly of irregularities and deficiencies observed in the Work during performance of its services.

3. Submitting a certified written report of each test, inspection, and similar quality-control service to Architect, Contractor and to authorities having jurisdiction.
4. Submitting a final report of special tests and inspections at Substantial Completion, which includes a list of unresolved deficiencies.
5. Interpreting tests and inspections and stating in each report whether tested and inspected work complies with or deviates from the Contract Documents.
6. Retesting and reinspecting corrected work.

PART 2 - PRODUCTS (Not Used)

PART 3 - EXECUTION

3.1 TEST AND INSPECTION LOG

A. Prepare a record of tests and inspections. Include the following:

1. Date test or inspection was conducted.
2. Description of the Work tested or inspected.
3. Date test or inspection results were transmitted to Architect.
4. Identification of testing agency or special inspector conducting test or inspection.

B. Maintain log at Project site. Post changes and modifications as they occur. Provide access to test and inspection log for Architect's reference during normal working hours.

1. Submit log at Project closeout as part of Project Record Documents.

3.2 REPAIR AND PROTECTION

A. General: On completion of testing, inspecting, sample taking, and similar services, repair damaged construction and restore substrates and finishes.

1. Provide materials and comply with installation requirements specified in other Specification Sections or matching existing substrates and finishes. Restore patched areas and extend restoration into adjoining areas with durable seams that are as invisible as possible. Comply with the Contract Document requirements for cutting and patching in Section 017300 "Execution."

B. Protect construction exposed by or for quality-control service activities.

C. Repair and protection are Contractor's responsibility, regardless of the assignment of responsibility for quality-control services.

END OF SECTION 014000

SECTION 014200 - REFERENCES

PART 1 - GENERAL

1.1 RELATED DOCUMENTS

A. Drawings and general provisions of the Contract, including General and Supplementary Conditions and other Division 01 Specification Sections, apply to this Section.

1.2 DEFINITIONS

A. General: Basic Contract definitions are included in the Conditions of the Contract.

B. "Approved": When used to convey Architect's action on Contractor's submittals, applications, and requests, "approved" is limited to Architect's duties and responsibilities as stated in the Conditions of the Contract.

C. "Directed": A command or instruction by Architect. Other terms including "requested," "authorized," "selected," "required," and "permitted" have the same meaning as "directed."

D. "Indicated": Requirements expressed by graphic representations or in written form on Drawings, in Specifications, and in other Contract Documents. Other terms including "shown," "noted," "scheduled," and "specified" have the same meaning as "indicated."

E. "Regulations": Laws, ordinances, statutes, and lawful orders issued by authorities having jurisdiction, and rules, conventions, and agreements within the construction industry that control performance of the Work.

F. "Furnish": Supply and deliver to Project site, ready for unloading, unpacking, assembly, installation, and similar operations.

G. "Install": Unload, temporarily store, unpack, assemble, erect, place, anchor, apply, work to dimension, finish, cure, protect, clean, and similar operations at Project site.

H. "Provide": Furnish and install, complete and ready for the intended use.

I. "Project Site": Space available for performing construction activities. The extent of Project site is shown on Drawings and may or may not be identical with the description of the land on which Project is to be built.

1.3 INDUSTRY STANDARDS

A. Applicability of Standards: Unless the Contract Documents include more stringent requirements, applicable construction industry standards have the same force and effect as if bound or copied directly into the Contract Documents to the extent referenced. Such standards are made a part of the Contract Documents by reference.

B. Publication Dates: Comply with standards in effect as of date of the Contract Documents unless otherwise indicated.

1. For standards referenced by applicable building codes, comply with dates of standards as listed in building codes.

C. Copies of Standards: Each entity engaged in construction on Project should be familiar with industry standards applicable to its construction activity. Copies of applicable standards are not bound with the Contract Documents.

1. Where copies of standards are needed to perform a required construction activity, obtain copies directly from publication source.

1.4 ABBREVIATIONS AND ACRONYMS

A. Industry Organizations: Where abbreviations and acronyms are used in Specifications or other Contract Documents, they shall mean the recognized name of the entities indicated in Gale's "Encyclopedia of Associations: National Organizations of the U.S." or in Columbia Books' "National Trade & Professional Associations of the United States."

1. AABC - Associated Air Balance Council; www.aabc.com.
2. AAMA - American Architectural Manufacturers Association; www.aamanet.org.
3. AAPFCO - Association of American Plant Food Control Officials; www.aapfco.org.
4. AASHTO - American Association of State Highway and Transportation Officials; www.transportation.org.
5. AATCC - American Association of Textile Chemists and Colorists; www.aatcc.org.
6. ABMA - American Bearing Manufacturers Association; www.americanbearings.org.
7. ABMA - American Boiler Manufacturers Association; www.abma.com.
8. ACI - American Concrete Institute; (Formerly: ACI International); www.concrete.org.
9. ACPA - American Concrete Pipe Association; www.concrete-pipe.org.
10. AEIC - Association of Edison Illuminating Companies, Inc. (The); www.aeic.org.
11. AF&PA - American Forest & Paper Association; www.afandpa.org.
12. AGA - American Gas Association; www.aga.org.
13. AHAM - Association of Home Appliance Manufacturers; www.aham.org.
14. AHRI - Air-Conditioning, Heating, and Refrigeration Institute (The); www.ahrinet.org.
15. AI - Asphalt Institute; www.asphaltinstitute.org.
16. AIA - American Institute of Architects (The); www.aia.org.
17. AISC - American Institute of Steel Construction; www.aisc.org.
18. AISI - American Iron and Steel Institute; www.steel.org.
19. AITC - American Institute of Timber Construction; www.aitc-glulam.org.
20. AMCA - Air Movement and Control Association International, Inc.; www.amca.org.
21. ANSI - American National Standards Institute; www.ansi.org.
22. AOSA - Association of Official Seed Analysts, Inc.; www.aosaseed.com.
23. APA - APA - The Engineered Wood Association; www.apawood.org.
24. APA - Architectural Precast Association; www.archprecast.org.
25. API - American Petroleum Institute; www.api.org.
26. ARI - Air-Conditioning & Refrigeration Institute; (See AHRI).
27. ARI - American Refrigeration Institute; (See AHRI).
28. ARMA - Asphalt Roofing Manufacturers Association; www.asphaltroofing.org.
29. ASCE - American Society of Civil Engineers; www.asce.org.
30. ASCE/SEI - American Society of Civil Engineers/Structural Engineering Institute; (See ASCE).
31. ASHRAE - American Society of Heating, Refrigerating and Air-Conditioning Engineers; www.ashrae.org.

32. ASME - ASME International; (American Society of Mechanical Engineers); www.asme.org.
33. ASSE - American Society of Sanitary Engineering; www.asse-plumbing.org.
34. ASSP - American Society of Safety Professionals (The); www.assp.org.
35. ASTM - ASTM International; www.astm.org.
36. ATIS - Alliance for Telecommunications Industry Solutions; www.atis.org.
37. AVIXA - Audiovisual and Integrated Experience Association; (Formerly: Infocomm International); www.soundandcommunications.com.
38. AWEA - American Wind Energy Association; www.awea.org.
39. AWI - Architectural Woodwork Institute; www.awinet.org.
40. AWMAC - Architectural Woodwork Manufacturers Association of Canada; www.awmac.com.
41. AWPA - American Wood Protection Association; www.awpa.com.
42. AWS - American Welding Society; www.aws.org.
43. AWWA - American Water Works Association; www.awwa.org.
44. BHMA - Builders Hardware Manufacturers Association; www.buildershardware.com.
45. BIA - Brick Industry Association (The); www.gobrick.com.
46. BICSI - BICSI, Inc.; www.bicsi.org.
47. BIFMA - BIFMA International; (Business and Institutional Furniture Manufacturer's Association); www.bifma.org.
48. BISSC - Baking Industry Sanitation Standards Committee; www.bissc.org.
49. BWF - Badminton World Federation; (Formerly: International Badminton Federation); www.bissc.org.
50. CDA - Copper Development Association; www.copper.org.
51. CE - Conformite Europeenne; www.ec.europa.eu/growth/single-market/ce-marking.
52. CEA - Canadian Electricity Association; www.electricity.ca.
53. CFFA - Chemical Fabrics and Film Association, Inc.; www.chemicalfabricsandfilm.com.
54. CFSEI - Cold-Formed Steel Engineers Institute; www.cfsei.org.
55. CGA - Compressed Gas Association; www.cganet.com.
56. CIMA - Cellulose Insulation Manufacturers Association; www.cellulose.org.
57. CISCA - Ceilings & Interior Systems Construction Association; www.cisca.org.
58. CISPI - Cast Iron Soil Pipe Institute; www.cispi.org.
59. CLFMI - Chain Link Fence Manufacturers Institute; www.chainlinkinfo.org.
60. CPA - Composite Panel Association; www.compositepanel.org.
61. CRI - Carpet and Rug Institute (The); www.carpet-rug.org.
62. CRRC - Cool Roof Rating Council; www.coolroofs.org.
63. CRSI - Concrete Reinforcing Steel Institute; www.crsi.org.
64. CSA - CSA Group; www.csa-group.org.
65. CSI - Construction Specifications Institute (The); www.csiresources.org.
66. CSSB - Cedar Shake & Shingle Bureau; www.cedarbureau.org.
67. CTA - Consumer Technology Association; www.cta.tech.
68. CTI - Cooling Technology Institute; (Formerly: Cooling Tower Institute); www.coolingtechnology.org.
69. CWC - Composite Wood Council; (See CPA).
70. DASMA - Door and Access Systems Manufacturers Association; www.dasma.com.
71. DHA - Decorative Hardwoods Association; (Formerly: Hardwood Plywood & Veneer Association); www.decorativehardwoods.org.
72. DHI - Door and Hardware Institute; www.dhi.org.
73. ECA - Electronic Components Association; (See ECIA).
74. ECAMA - Electronic Components Assemblies & Materials Association; (See ECIA).
75. ECIA - Electronic Components Industry Association; www.ecianow.org.

76. EIA - Electronic Industries Alliance; (See TIA).
77. EIMA - EIFS Industry Members Association; www.eima.com.
78. EJMA - Expansion Joint Manufacturers Association, Inc.; www.ejma.org.
79. EOS/ESD Association; (Electrostatic Discharge Association); www.esda.org.
80. ESTA - Entertainment Services and Technology Association; (See PLASA).
81. ETL - Intertek (See Intertek); www.intertek.com.
82. EVO - Efficiency Valuation Organization; www.evo-world.org.
83. FCI - Fluid Controls Institute; www.fluidcontrolsinstitute.org.
84. FIBA - Federation Internationale de Basketball; (The International Basketball Federation); www.fiba.com.
85. FIVB - Federation Internationale de Volleyball; (The International Volleyball Federation); www.fivb.org.
86. FM Approvals - FM Approvals LLC; www.fmglobal.com.
87. FM Global - FM Global; (Formerly: FMG - FM Global); www.fmglobal.com.
88. FRSA - Florida Roofing, Sheet Metal Contractors Association, Inc.; www.floridaroof.com.
89. FSA - Fluid Sealing Association; www.fluidsealing.com.
90. FSC - Forest Stewardship Council U.S.; www.fscus.org.
91. GA - Gypsum Association; www.gypsum.org.
92. GANA - Glass Association of North America; (See NGA).
93. GS - Green Seal; www.greenseal.org.
94. HI - Hydraulic Institute; www.pumps.org.
95. HI/GAMA - Hydronics Institute/Gas Appliance Manufacturers Association; (See AHRI).
96. HMMA - Hollow Metal Manufacturers Association; (See NAAMM).
97. HPVA - Hardwood Plywood & Veneer Association; (See DHA).
98. HPW - H. P. White Laboratory, Inc.; www.hpwhite.com.
99. IAPSC - International Association of Professional Security Consultants; www.iapsc.org.
100. IAS - International Accreditation Service; www.iasonline.org.
101. ICBO - International Conference of Building Officials; (See ICC).
102. ICC - International Code Council; www.iccsafe.org.
103. ICEA - Insulated Cable Engineers Association, Inc.; www.icea.net.
104. ICPA - International Cast Polymer Association; www.theicpa.com.
105. ICRI - International Concrete Repair Institute, Inc.; www.icri.org.
106. IEC - International Electrotechnical Commission; www.iec.ch.
107. IEEE - Institute of Electrical and Electronics Engineers, Inc. (The); www.ieee.org.
108. IES - Illuminating Engineering Society; (Formerly: Illuminating Engineering Society of North America); www.ies.org.
109. IESNA - Illuminating Engineering Society of North America; (See IES).
110. IEST - Institute of Environmental Sciences and Technology; www.iest.org.
111. IGMA - Insulating Glass Manufacturers Alliance; www.igmaonline.org.
112. IGSHPA - International Ground Source Heat Pump Association; www.igshpa.org.
113. II - Infocomm International; (See AVIXA).
114. ILI - Indiana Limestone Institute of America, Inc.; www.iliai.com.
115. Intertek - Intertek Group; (Formerly: ETL SEMCO; Intertek Testing Service NA); www.intertek.com.
116. ISA - International Society of Automation (The); (Formerly: Instrumentation, Systems, and Automation Society); www.isa.org.
117. ISAS - Instrumentation, Systems, and Automation Society (The); (See ISA).
118. ISFA - International Surface Fabricators Association; (Formerly: International Solid Surface Fabricators Association); www.isfanow.org.
119. ISO - International Organization for Standardization; www.iso.org.

120. ISSFA - International Solid Surface Fabricators Association; (See ISFA).
121. ITU - International Telecommunication Union; www.itu.int.
122. KCMA - Kitchen Cabinet Manufacturers Association; www.kcma.org.
123. LMA - Laminating Materials Association; (See CPA).
124. LPI - Lightning Protection Institute; www.lightning.org.
125. MBMA - Metal Building Manufacturers Association; www.mbma.com.
126. MCA - Metal Construction Association; www.metalconstruction.org.
127. MFMA - Maple Flooring Manufacturers Association, Inc.; www.maplefloor.org.
128. MFMA - Metal Framing Manufacturers Association, Inc.; www.metalframingmfg.org.
129. MHI - Material Handling Industry of America; www.mhia.org.
130. MIA - Marble Institute of America; (See NSI).
131. MMPA - Moulding & Millwork Producers Association; www.wmmpa.com.
132. MPI - Master Painters Institute; www.paintinfo.com.
133. MSS - Manufacturers Standardization Society of The Valve and Fittings Industry Inc.; www.mss-hq.org.
134. NAAMM - National Association of Architectural Metal Manufacturers; www.naamm.org.
135. NACE - NACE International; (National Association of Corrosion Engineers International); www.nace.org.
136. NADCA - National Air Duct Cleaners Association; www.nadca.com.
137. NAIMA - North American Insulation Manufacturers Association; www.naima.org.
138. NALP - National Association of Landscape Professionals; www.landscapeprofessionals.org.
139. NBGQA - National Building Granite Quarries Association, Inc.; www.nbgqa.com.
140. NBI - New Buildings Institute; www.newbuildings.org.
141. NCAA - National Collegiate Athletic Association (The); www.ncaa.org.
142. NCMA - National Concrete Masonry Association; www.ncma.org.
143. NEBB - National Environmental Balancing Bureau; www.nebb.org.
144. NECA - National Electrical Contractors Association; www.necanet.org.
145. NeLMA - Northeastern Lumber Manufacturers Association; www.nelma.org.
146. NEMA - National Electrical Manufacturers Association; www.nema.org.
147. NETA - InterNational Electrical Testing Association; www.netaworld.org.
148. NFHS - National Federation of State High School Associations; www.nfhs.org.
149. NFPA - National Fire Protection Association; www.nfpa.org.
150. NFPA - NFPA International; (See NFPA).
151. NFRC - National Fenestration Rating Council; www.nfrc.org.
152. NGA - National Glass Association (The); (Formerly: Glass Association of North America); www.glass.org.
153. NHLA - National Hardwood Lumber Association; www.nhla.com.
154. NLGA - National Lumber Grades Authority; www.nlga.org.
155. NOFMA - National Oak Flooring Manufacturers Association; (See NWFA).
156. NOMMA - National Ornamental & Miscellaneous Metals Association; www.nomma.org.
157. NRCA - National Roofing Contractors Association; www.nrca.net.
158. NRMCA - National Ready Mixed Concrete Association; www.nrmca.org.
159. NSF - NSF International; www.nsf.org.
160. NSI - National Stone Institute; (Formerly: Marble Institute of America); www.naturalstoneinstitute.org.
161. NSPE - National Society of Professional Engineers; www.nspe.org.
162. NSSGA - National Stone, Sand & Gravel Association; www.nssga.org.
163. NTMA - National Terrazzo & Mosaic Association, Inc. (The); www.ntma.com.
164. NWFA - National Wood Flooring Association; www.nwfa.org.

165. NWRA - National Waste & Recycling Association; www.wasterecycling.org
166. PCI - Precast/Prestressed Concrete Institute; www.pci.org.
167. PDI - Plumbing & Drainage Institute; www.pdionline.org.
168. PLASA - PLASA; (Formerly: ESTA - Entertainment Services and Technology Association); www.plasa.org.
169. RCSC - Research Council on Structural Connections; www.boltcouncil.org.
170. RFCI - Resilient Floor Covering Institute; www.rfci.com.
171. RIS - Redwood Inspection Service; www.redwoodinspection.com.
172. SAE - SAE International; www.sae.org.
173. SCTE - Society of Cable Telecommunications Engineers; www.scte.org.
174. SDI - Steel Deck Institute; www.sdi.org.
175. SDI - Steel Door Institute; www.steeldoor.org.
176. SEFA - Scientific Equipment and Furniture Association (The); www.sefalabs.com.
177. SEI/ASCE - Structural Engineering Institute/American Society of Civil Engineers; (See ASCE).
178. SIA - Security Industry Association; www.siaonline.org.
179. SJI - Steel Joist Institute; www.steeljoist.org.
180. SMA - Screen Manufacturers Association; www.smainfo.org.
181. SMACNA - Sheet Metal and Air Conditioning Contractors' National Association; www.smacna.org.
182. SMPTE - Society of Motion Picture and Television Engineers; www.smpte.org.
183. SPFA - Spray Polyurethane Foam Alliance; www.sprayfoam.org.
184. SPIB - Southern Pine Inspection Bureau; www.spib.org.
185. SPRI - Single Ply Roofing Industry; www.spri.org.
186. SRCC - Solar Rating & Certification Corporation; www.solar-rating.org.
187. SSINA - Specialty Steel Industry of North America; www.ssina.com.
188. SSPC - SSPC: The Society for Protective Coatings; www.sspc.org.
189. STI - Steel Tank Institute; www.steeltank.com.
190. SWI - Steel Window Institute; www.steelwindows.com.
191. SWPA - Submersible Wastewater Pump Association; www.swpa.org.
192. TCA - Tilt-Up Concrete Association; www.tilt-up.org.
193. TCNA - Tile Council of North America, Inc.; www.tileusa.com.
194. TEMA - Tubular Exchanger Manufacturers Association, Inc.; www.tema.org.
195. TIA - Telecommunications Industry Association (The); (Formerly: TIA/EIA - Telecommunications Industry Association/Electronic Industries Alliance); www.tiaonline.org.
196. TIA/EIA - Telecommunications Industry Association/Electronic Industries Alliance; (See TIA).
197. TMS - The Masonry Society; www.masonrysociety.org.
198. TPI - Truss Plate Institute; www.tpinst.org.
199. TPI - Turfgrass Producers International; www.turfgrasssod.org.
200. TRI - Tile Roofing Institute; www.tileroofing.org.
201. UL - Underwriters Laboratories Inc.; www.ul.com.
202. UNI - Uni-Bell PVC Pipe Association; www.uni-bell.org.
203. USAV - USA Volleyball; www.usavolleyball.org.
204. USGBC - U.S. Green Building Council; www.usgbc.org.
205. USITT - United States Institute for Theatre Technology, Inc.; www.usitt.org.
206. WA - Wallcoverings Association; www.wallcoverings.org.
207. WCLIB - West Coast Lumber Inspection Bureau; www.wclib.org.
208. WCMA - Window Covering Manufacturers Association; www.wcmanet.org.
209. WDMA - Window & Door Manufacturers Association; www.wdma.com.

210. WI - Woodwork Institute; www.wicnet.org.
211. WSRCA - Western States Roofing Contractors Association; www.wsrca.com.
212. WWPA - Western Wood Products Association; http://www.wwpa.org.

B. Code Agencies: Where abbreviations and acronyms are used in Specifications or other Contract Documents, they shall mean the recognized name of the entities in the following list. This information is believed to be accurate as of the date of the Contract Documents.

1. IAPMO - International Association of Plumbing and Mechanical Officials; www.iapmo.org.
2. ICC - International Code Council; www.iccsafe.org.
3. ICC-ES - ICC Evaluation Service, LLC; www.icc-es.org.

C. Federal Government Agencies: Where abbreviations and acronyms are used in Specifications or other Contract Documents, they shall mean the recognized name of the entities in the following list. Information is subject to change and is up to date as of the date of the Contract Documents.

1. COE - Army Corps of Engineers; www.usace.army.mil.
2. CPSC - Consumer Product Safety Commission; www.cpsc.gov.
3. DOC - Department of Commerce; National Institute of Standards and Technology; www.nist.gov.
4. DOD - Department of Defense; www.quicksearch.dla.mil.
5. DOE - Department of Energy; www.energy.gov.
6. EPA - Environmental Protection Agency; www.epa.gov.
7. FAA - Federal Aviation Administration; www.faa.gov.
8. FG - Federal Government Publications; www.gpo.gov/fdsys.
9. GSA - General Services Administration; www.gsa.gov.
10. HUD - Department of Housing and Urban Development; www.hud.gov.
11. LBL - Lawrence Berkeley National Laboratory; Environmental Energy Technologies Division; www.eetd.lbl.gov.
12. OSHA - Occupational Safety & Health Administration; www.osha.gov.
13. SD - Department of State; www.state.gov.
14. TRB - Transportation Research Board; National Cooperative Highway Research Program; The National Academies; www.trb.org.
15. USDA - Department of Agriculture; Agriculture Research Service; U.S. Salinity Laboratory; www.ars.usda.gov.
16. USDA - Department of Agriculture; Rural Utilities Service; www.usda.gov.
17. USDOJ - Department of Justice; Office of Justice Programs; National Institute of Justice; www.ojp.usdoj.gov.
18. USP - U.S. Pharmacopeial Convention; www.usp.org.
19. USPS - United States Postal Service; www.usps.com.

D. Standards and Regulations: Where abbreviations and acronyms are used in Specifications or other Contract Documents, they shall mean the recognized name of the standards and regulations in the following list. This information is subject to change and is believed to be accurate as of the date of the Contract Documents.

1. CFR - Code of Federal Regulations; Available from Government Printing Office; www.govinfo.gov.
2. DOD - Department of Defense; Military Specifications and Standards; Available from DLA Document Services; www.quicksearch.dla.mil.

3. DSCC - Defense Supply Center Columbus; (See FS).
4. FED-STD - Federal Standard; (See FS).
5. FS - Federal Specification; Available from DLA Document Services; www.quicksearch.dla.mil.

    a. Available from Defense Standardization Program; www.dsp.dla.mil.
    b. Available from General Services Administration; www.gsa.gov.
    c. Available from National Institute of Building Sciences/Whole Building Design Guide; www.wbdg.org.

6. MILSPEC - Military Specification and Standards; (See DOD).
7. USAB - United States Access Board; www.access-board.gov.
8. USATBCB - U.S. Architectural & Transportation Barriers Compliance Board; (See USAB).

PART 2 - PRODUCTS (Not Used)

PART 3 - EXECUTION (Not Used)

END OF SECTION 014200

SECTION 015000 - TEMPORARY FACILITIES AND CONTROLS

PART 1 - GENERAL

1.1 RELATED DOCUMENTS

A. Drawings and general provisions of the Contract, including General and Supplementary Conditions and other Division 01 Specification Sections, apply to this Section.

1.2 SUMMARY

A. Section includes requirements for temporary utilities, and support, security, and protection facilities.

B. Related Requirements:

1. Section 011000 "Summary of Work" for work restrictions and limitations on utility interruptions.

1.3 USE CHARGES

A. Installation, removal, and use charges for temporary facilities shall be included in the Contract Sum unless otherwise indicated. Allow other entities engaged in the Project to use temporary services and facilities without cost, including, but not limited to, Architect, testing agencies, and authorities having jurisdiction.

B. Sewer Service: Pay sewer-service use charges for sewer usage by all entities for construction operations.

C. Water Service: Pay water-service use charges for water used by all entities for construction operations.

D. Electric Power Service: Pay electric-power-service use charges for electricity used by all entities for construction operations.

1.4 INFORMATIONAL SUBMITTALS

A. Site Plan: Show temporary facilities, utility connections, staging areas, construction site entrances, vehicle circulation, and parking areas for construction personnel.

B. Project Identification and Temporary Signs: Show fabrication and installation details, including plans, elevations, details, layouts, typestyles, graphic elements, and message content.

1.5 QUALITY ASSURANCE

A. Electric Service: Comply with NECA, NEMA, and UL standards and regulations for temporary electric service. Install service to comply with NFPA 70.

1.6 PROJECT CONDITIONS

A. Temporary Use of Permanent Facilities: Engage Installer of each permanent service to assume responsibility for operation, maintenance, and protection of each permanent service during its use as a construction facility before Owner's acceptance, regardless of previously assigned responsibilities.

PART 2 - PRODUCTS

2.1 MATERIALS

A. Portable Chain-Link Fencing: Minimum 2-inch, 0.148-inch-thick, galvanized-steel, chain-link fabric fencing; minimum 6 feet high with galvanized-steel pipe posts; minimum 2-3/8-inch-OD line posts and 2-7/8-inch-OD corner and pull posts, with 1-5/8-inch-OD top and bottom rails. Provide galvanized-steel bases for supporting posts.

B. Dust-Control Adhesive-Surface Walk-Off Mats: Provide mats, minimum 36 by 60 inches.

2.2 TEMPORARY FACILITIES

A. Field Offices: Prefabricated or mobile units with serviceable finishes, temperature controls, and foundations adequate for normal loading. Unit must be large enough for regular job meetings, plan review areas, submittal storage and other job file and administrative functions.

B. Storage and Fabrication Sheds: Provide sheds sized, furnished, and equipped to accommodate materials and equipment for construction operations.

1. Sheds to be metal box storage units or have wood floors raised above the ground.
2. Store combustible materials apart from building.

2.3 EQUIPMENT

A. Fire Extinguishers: Portable, UL rated; with class and extinguishing agent as required by locations and classes of fire exposures.

PART 3 - EXECUTION

3.1 TEMPORARY FACILITIES, GENERAL

A. Conservation: Coordinate construction and use of temporary facilities with consideration given to conservation of energy, water, and materials. Coordinate use of temporary utilities to minimize waste.

1. Salvage materials and equipment involved in performance of, but not actually incorporated into, the Work. See other Sections for disposition of salvaged materials that are designated as Owner's property.

3.2 INSTALLATION, GENERAL

A. Locate facilities where they will serve Project adequately and result in minimum interference with performance of the Work. Relocate and modify facilities as required by progress of the Work.

B. Provide each facility ready for use when needed to avoid delay. Do not remove until facilities are no longer needed or are replaced by authorized use of completed permanent facilities.

3.3 TEMPORARY UTILITY INSTALLATION

A. General: Install temporary service or connect to existing service.

B. Sewers and Drainage: Provide temporary utilities to remove effluent lawfully.

1. Connect temporary sewers to municipal system as directed by authorities having jurisdiction.

C. Water Service: Install water service and distribution piping in sizes and pressures adequate for construction.

D. Sanitary Facilities: Provide temporary toilets, wash facilities, safety shower and eyewash facilities, and drinking water for use of construction personnel. Comply with requirements of authorities having jurisdiction for type, number, location, operation, and maintenance of fixtures and facilities.

1. Use of Permanent Toilets: Use of Owner's new toilet facilities is not permitted.

E. Temporary Heating and Cooling: Provide temporary heating and cooling required by construction activities for curing or drying of completed installations or for protecting installed construction from adverse effects of low temperatures or high humidity. Select equipment that will not have a harmful effect on completed installations or elements being installed.

1. Provide temporary dehumidification systems when required to reduce ambient and substrate moisture levels to level required to allow installation or application of finishes and their proper curing or drying.

F. Electric Power Service: Provide electric power service and distribution system of sufficient size, capacity, and power characteristics required for construction operations.

G. Lighting: Provide temporary lighting with local switching that provides adequate illumination for construction operations, observations, inspections, and traffic conditions.

1. Install and operate temporary lighting that fulfills security and protection requirements without operating entire system.

H. Electronic Communication Service: Regardless of availability of Owner’s service, the Contractor shall maintain at his expense secure and reliable Wi-Fi wireless connection to internet with provisions for access by Architect, the Owner’s staff, Municipal Officials or Inspectors, and all subcontractors.

3.4 SUPPORT FACILITIES INSTALLATION

A. General: Comply with the following:

1. Provide construction for temporary field offices, shops, and sheds located within construction area or within 30 feet of building lines that is noncombustible in accordance with ASTM E 136. Comply with NFPA 241.
2. Maintain support facilities until Architect schedules Substantial Completion inspection. Remove before Substantial Completion. Personnel remaining after Substantial Completion will be permitted to use permanent facilities, under conditions acceptable to Owner.

B. Traffic Controls: Comply with requirements of authorities having jurisdiction.

1. Protect existing site improvements to remain including curbs, pavement, and utilities.
2. Maintain access for fire-fighting equipment and access to fire hydrants.

C. Parking: Provide temporary parking areas for construction personnel.

D. Storage and Staging: Use designated areas of Project site for storage and staging needs.

E. Dewatering Facilities and Drains: Comply with requirements of authorities having jurisdiction. Maintain Project site, excavations, and construction free of water.

1. Dispose of rainwater in a lawful manner that will not result in flooding Project or adjoining properties or endanger permanent Work or temporary facilities.
2. Remove snow and ice as required to minimize accumulations.

F. Project Signs: Provide Project signs as indicated and as required by Owner. Unauthorized signs are not permitted.

1. Identification Signs: Provide Project identification signs. Refer to attached requirements.
2. Temporary Signs: Provide other signs as indicated and as required to inform public and individuals seeking entrance to Project.

   a. Provide temporary, directional signs for construction personnel and visitors.

3. Maintain and touch up signs so they are legible at all times.

G. Waste Disposal Facilities: Provide waste-collection containers in sizes adequate to handle waste from construction operations. Comply with requirements of authorities having jurisdiction. Comply with progress cleaning requirements in Section 017300 "Execution."

H. Existing Stair Usage: Use of Owner's existing stairs will be permitted, provided stairs are cleaned and maintained in a condition acceptable to Owner. At Substantial Completion, restore stairs to condition existing before initial use.

1. Provide protective coverings, barriers, devices, signs, or other procedures to protect stairs and to maintain means of egress. If stairs become damaged, restore damaged areas so no evidence remains of correction work.

3.5 SECURITY AND PROTECTION FACILITIES INSTALLATION

A. Protection of Existing Facilities: Protect existing vegetation, equipment, structures, utilities, and other improvements at Project site and on adjacent properties, except those indicated to be removed or altered. Repair damage to existing facilities.

B. Environmental Protection: Provide protection, operate temporary facilities, and conduct construction as required to comply with environmental regulations and that minimize possible air, waterway, and subsoil contamination or pollution or other undesirable effects.

C. Temporary Erosion and Sedimentation Control: Comply with requirements specified in Section 015713 “Temporary Erosion and Sediment Control”.

D. Stormwater Control: Comply with requirements of authorities having jurisdiction. Provide barriers in and around excavations and subgrade construction to prevent flooding by runoff of stormwater from heavy rains.

E. Site Enclosure Fence: Before construction operations begin, furnish and install site enclosure fence in a manner that will prevent people from easily entering site except by entrance gates.

1. Extent of Fence: As required to enclose entire Project site or portion determined sufficient to accommodate construction operations.
2. Maintain security by limiting number of keys and restricting distribution to authorized personnel.

F. Security Enclosure and Lockup: Install temporary enclosure around partially completed areas of construction. Provide lockable entrances to prevent unauthorized entrance, vandalism, theft, and similar violations of security. Lock entrances at end of each workday.

G. Barricades, Warning Signs, and Lights: Comply with requirements of authorities having jurisdiction for erecting structurally adequate barricades, including warning signs and lighting.

H. Temporary Enclosures: Provide temporary enclosures for protection of construction, in progress and completed, from exposure, foul weather, other construction operations, and similar activities. Provide temporary weathertight enclosure for building exterior.

3.6 OPERATION, TERMINATION, AND REMOVAL

A. Maintenance: Maintain facilities in good operating condition until removal.

1. Maintain operation of temporary enclosures, heating, cooling, humidity control, ventilation, and similar facilities on a 24-hour basis where required to achieve indicated results and to avoid possibility of damage.

B. Temporary Facility Changeover: Do not change over from using temporary security and protection facilities to permanent facilities until Substantial Completion.

C. Termination and Removal: Remove each temporary facility when need for its service has ended, when it has been replaced by authorized use of a permanent facility, or no later than Substantial Completion. Complete or, if necessary, restore permanent construction that may have been

delayed because of interference with temporary facility. Repair damaged Work, clean exposed surfaces, and replace construction that cannot be satisfactorily repaired.

1. Materials and facilities that constitute temporary facilities are property of Contractor. Owner reserves right to take possession of Project identification signs.
2. At Substantial Completion, repair, renovate, and clean permanent facilities used during construction period. Comply with final cleaning requirements specified in Section 017700 "Closeout Procedures."

END OF SECTION 015000

DEPARTMENT OF ECONOMIC & COMMUNITY DEVELOPMENT
PROJECT SIGN

8’-0”

4’-0”

NAME OF THE PROJECT

NAME OF THE SPONSOR/DEVELOPER

Constructed in cooperation with the

STATE OF CONNECTICUT
NED LAMONT, GOVERNOR

Department of Economic and Community Development
David Lehman, Commissioner

and the
Name of Town/City
Name of Chief Elected Official and title

Name of Architect

Name of General Contractor

SIGN PANEL: ¾” MDO-EXT-APA PLYWOOD SUPPORTED WITH (2) 4X4 TREATED WOOD COLUMNS AND SECURED 4’ INTO GRADE. TOP OF SIGN AT 8’-0” ABOVE GRADE.

COLORS: ALL LETTERS AND SYMBOLS ARE TO BE ROYAL BLUE. THE BACKGROUND WILL BE WHITE ENAMEL. BACK OF PLYWOOD AND SUPPORT STRUCTURE SHALL BE PAINTED MATTE BLACK.

TYPEFACE: HELVETICA MEDIUM

LOCATION: SIGN MUST BE LOCATED TO BE CLEARLY VISIBLE TO THE PUBLIC.

TIMING: INSTALL AT THE START OF CONSTRUCTION AND REMOVE AT CONSTRUCTION COMPLETION.

STATE SEAL & DECD LOGO: ATTACHED

STATE SEAL

DECD LOGO

SECTION 015713 - TEMPORARY EROSION AND SEDIMENT CONTROL

PART 1 - GENERAL

1.1 RELATED DOCUMENTS

A. The Contractor, Subcontractors, and/or suppliers providing goods or services referenced in or related to this Section shall also be bound by the Documents identified in Division 01 Section "Summary", Paragraph 1.01A, entitled "Related Documents."

1.2 SUMMARY

A. Section Includes

1. Prevention of erosion due to construction activities.
2. Prevention of sedimentation of waterways, open drainage ways, and storm and sanitary sewers due to construction activities.
3. Restoration of areas eroded due to insufficient preventive measures.
4. Compensation of City of Colchester for fines levied by authorities having jurisdiction due to non-compliance by Contractor.

1.3 SUBMITTALS

A. Certificate: Mill certificate for silt fence fabric attesting that fabric and factory seams comply with specified requirements, signed by legally authorized official of manufacturer; indicate actual minimum average roll values; identify fabric by roll identification numbers.

1.4 REFERENCE STANDARDS

A. ASTM D4355/D4355M - Standard Test Method for Deterioration of Geotextiles by Exposure to Light, Moisture and Heat in a Xenon Arc Type Apparatus 2014.

B. ASTM D4491 - Standard Test Methods for Water Permeability of Geotextiles by Permittivity. 1999a (Reapproved 2014).

C. ASTM D4533 - Standard Test Method for Trapezoid Tearing Strength of Geotextiles 2011.

D. ASTM D4632/D4632M - Standard Test Method for Grab Breaking Load and Elongation of Geotextiles 2015a.

E. ASTM D4751 - Standard Test Method for Determining Apparent Opening Size of a Geotextile 2016.

F. ASTM D4873 - Standard Guide for Identification, Storage, and Handling of Geosynthetic Rolls and Samples 2002 (Reapproved 2009).

PART 2 - PRODUCTS

2.1 MATERIALS

A. Grass Seed For Temporary Cover: Select a species appropriate to climate, planting season, and intended purpose. If same area will later be planted with permanent vegetation, do not use species known to be excessively competitive or prone to volunteer in subsequent seasons.

B. Silt Fence Fabric: Polypropylene geotextile resistant to common soil chemicals, mildew, and insects; non-biodegradable; in longest lengths possible; fabric including seams with the following minimum average roll lengths:

1. Average Opening Size: 30 U.S. Std. Sieve, maximum, when tested in accordance with ASTM D4751.
2. Permittivity: 0.05 sec^-1, minimum, when tested in accordance with ASTM D4491.
3. Ultraviolet Resistance: Retaining at least 70 percent of tensile strength, when tested in accordance with ASTM D4355/D4355M after 500 hours exposure.
4. Tensile Strength: 100 pounds-force, minimum, in cross-machine direction; 124 pounds-force, minimum, in machine direction; when tested in accordance with ASTM D4632/D4632M.
5. Elongation: 15 to 30 percent, when tested in accordance with ASTM D4632/D4632M.
6. Tear Strength: 55 pounds-force, minimum, when tested in accordance with ASTM D4533.
7. Color: Manufacturer's standard, with embedment and fastener lines preprinted.

C. Silt Fence Posts: minimum 5 feet long.

D. Gravel: See Section 312000 for crushed stone.

E. Erosion control blankets:

1. Basis of Design: ERONET S150 by North American Green RollMax Systems’. 5401 St. Wendel-Cynthiana Road, Poseyville, IN 47633, T. (812) 867-6632.

PART 3 - EXECUTION

3.1 EXAMINATION

A. Examine site and identify existing features that contribute to erosion resistance; maintain such existing features to greatest extent possible.

3.2 PREPARATION

A. Schedule work so that soil surfaces are left exposed for the minimum amount of time.

3.3 SCOPE OF PREVENTIVE MEASURES

A. In all cases, if permanent erosion resistant measures have been installed temporary preventive measures are not required.

B. Construction Entrances: Traffic-bearing aggregate surface.

1. Width: As required; 20 feet, minimum.
2. Length: 50 feet, minimum.
3. Provide at each construction entrance from public right-of-way.
4. Where necessary to prevent tracking of mud onto right-of-way, provide wheel washing area out of direct traffic lane, with drain into sediment trap or basin.

C. Linear Sediment Barriers: Made of silt fences.

1. Provide linear sediment barriers:

   a. Along downhill perimeter edge of disturbed areas, including soil stockpiles.

2. Space sediment barriers with the following maximum slope length upslope from barrier:

   a. Slope of Less Than 2 Percent: 100 feet..
   b. Slope Between 2 and 5 Percent: 75 feet.
   c. Slope Between 5 and 10 Percent: 50 feet.
   d. Slope Between 10 and 20 Percent: 25 feet.
   e. Slope Over 20 Percent: 15 feet.

D. Storm Drain Curb Inlet Sediment Trap: Protect each curb inlet using one of the following measures:

1. Filter fabric wrapped around hollow concrete blocks blocking entire inlet face area; use one piece of fabric wrapped at least 1-1/2 times around concrete blocks and secured to prevent dislodging; orient cores of blocks so runoff passes into inlet.
2. Straw bale row blocking entire inlet face area; anchor into pavement.

E. Storm Drain Drop Inlet Sediment Traps: As detailed on drawings.

F. Temporary Splash Pads: Stone aggregate over filter fabric; size to suit application; provide at downspout outlets and storm water outlets.

G. Soil Stockpiles: Protect using one of the following measures:

1. Cover with polyethylene film, secured by placing soil on outer edges.
2. Cover with mulch at least 4 inches thickness of pine needles, sawdust, bark, wood chips, or shredded leaves, or 6 inches of straw or hay.

H. Mulching: Use only for areas that may be subjected to erosion for less than 6 months.

I. Temporary Seeding: Use where temporary vegetated cover is required.

3.4 INSTALLATION

A. Traffic-Bearing Aggregate Surface:

1. Excavate minimum of 6 inches.
2. Place geotextile fabric full width and length, with minimum 12 inch overlap at joints.
3. Place and compact at least 6 inches of 1 1/2 to 3 1/2 inch diameter stone.

B. Silt Fences:

1. Store and handle fabric in accordance with ASTM D4873.
2. Where slope gradient is less than 3:1 or barriers will be in place less than 6 months, use nominal 16 inch high barriers with minimum 36 inch long posts spaced at 6 feet maximum, with fabric embedded at least 4 inches in ground.
3. Where slope gradient is steeper than 3:1 or barriers will be in place over 6 months, use nominal 28 inch high barriers, minimum 48 inch long posts spaced at 6 feet maximum, with fabric embedded at least 6 inches in ground.
4. Where slope gradient is steeper than 3:1 and vertical height of slope between barriers is more than 20 feet, use nominal 32 inch high barriers with woven wire reinforcement and steel posts spaced at 4 feet maximum, with fabric embedded at least 6 inches in ground.
5. Install with top of fabric at nominal height and embedment as specified.
6. Do not splice fabric width; minimize splices in fabric length; splice at post only, overlapping at least 18 inches, with extra post.
7. Wherever runoff will flow around end of barrier or over the top, provide temporary splash pad or other outlet protection; at such outlets in the run of the barrier, make barrier not more than 12 inches high with post spacing not more than 4 feet.

C. Temporary Seeding:

1. When hydraulic seeder is used, seedbed preparation is not required.
2. When surface soil has been sealed by rainfall or consists of smooth undisturbed cut slopes, and conventional or manual seeding is to be used, prepare seedbed by scarifying sufficiently to allow seed to lodge and germinate.
3. If temporary mulching was used on planting area but not removed, apply nitrogen fertilizer at 1 pound per 1000 sq ft.
4. On soils of very low fertility, apply 10-10-10 fertilizer at rate of 12 to 16 pounds per 1000 sq ft.
5. Incorporate fertilizer into soil before seeding.
6. Apply seed uniformly; if using drill or cultipacker seeders place seed 1/2 to 1 inch deep.
7. Irrigate as required to thoroughly wet soil to depth that will ensure germination, without causing runoff or erosion.
8. Repeat irrigation as required until grass is established.

3.5 MAINTENANCE

A. Inspect preventive measures weekly, within 24 hours after the end of any storm that produces 0.5 inches or more rainfall at the project site, and daily during prolonged rainfall.

B. Repair deficiencies immediately.

C. Silt Fences:

1. Promptly replace fabric that deteriorates unless need for fence has passed.
2. Remove silt deposits that exceed one-third of the height of the fence.
3. Repair fences that are undercut by runoff or otherwise damaged, whether by runoff or other causes.

D. Place sediment in appropriate locations on site; do not remove from site.

3.6 CLEAN UP

A. Remove temporary measures after permanent measures have been installed, unless permitted to remain by Engineer.

B. Clean out temporary sediment control structures that are to remain as permanent measures.

C. Where removal of temporary measures would leave exposed soil, shape surface to an acceptable grade and finish to match adjacent ground surfaces.

END OF SECTION 015713

3373-108-au821-spec-015713-temporary erosion and sediment control.docx

SECTION 016000 - PRODUCT REQUIREMENTS

PART 1 - GENERAL

1.1 RELATED DOCUMENTS

A. Drawings and general provisions of the Contract, including General and Supplementary Conditions and other Division 01 Specification Sections, apply to this Section.

1.2 SUMMARY

A. Section includes administrative and procedural requirements for selection of products for use in Project; product delivery, storage, and handling; manufacturers' standard warranties on products; special warranties; and comparable products.

B. Related Sections:

1. Section 012500 "Substitution Procedures" for requests for substitutions.
2. Section 014200 "References" for applicable industry standards for products specified.

1.3 DEFINITIONS

A. Products: Items obtained for incorporating into the Work, whether purchased for Project or taken from previously purchased stock. The term "product" includes the terms "material," "equipment," "system," and terms of similar intent.

1. Named Products: Items identified by manufacturer's product name, including make or model number or other designation shown or listed in manufacturer's published product literature, that is current as of date of the Contract Documents.
2. New Products: Items that have not previously been incorporated into another project or facility. Products salvaged or recycled from other projects are not considered new products.
3. Comparable Product: Product that is demonstrated and approved through submittal process to have the indicated qualities related to type, function, dimension, in-service performance, physical properties, appearance, and other characteristics that equal or exceed those of specified product.

B. Basis-of-Design Product Specification: A specification in which a specific manufacturer's product is named and accompanied by the words "basis-of-design product," including make or model number or other designation, to establish the significant qualities related to type, function, dimension, in-service performance, physical properties, appearance, and other characteristics for purposes of evaluating comparable products of additional manufacturers named in the specification.

1.4 ACTION SUBMITTALS

A. Comparable Product Requests: Submit request for consideration of each comparable product. Identify product or fabrication or installation method to be replaced. Include Specification Section number and title and Drawing numbers and titles.

1. Include data to indicate compliance with the requirements specified in "Comparable Products" Article.
2. Architect's Action: If necessary, Architect will request additional information or documentation for evaluation within one (1) week of receipt of a comparable product request. Architect will notify Contractor of approval or rejection of proposed comparable product request within seven (7) days of receipt of request, or seven (7) days of receipt of additional information or documentation, whichever is later.

    a. Form of Approval: As specified in Section 013300 "Submittal Procedures."
    b. Use product specified if Architect does not issue a decision on use of a comparable product request within time allocated.

B. Basis-of-Design Product Specification Submittal: Comply with requirements in Section 013300 "Submittal Procedures." Show compliance with requirements.

1.5 QUALITY ASSURANCE

A. Compatibility of Options: If Contractor is given option of selecting between two (2) or more products for use on Project, select product compatible with products previously selected, even if previously selected products were also options.

1. Each contractor is responsible for providing products and construction methods compatible with products and construction methods of other contractors.
2. If a dispute arises between contractors over concurrently selectable but incompatible products, Architect will determine which products shall be used.

1.6 PRODUCT DELIVERY, STORAGE, AND HANDLING

A. Deliver, store, and handle products using means and methods that will prevent damage, deterioration, and loss, including theft and vandalism. Comply with manufacturer's written instructions.

B. Delivery and Handling:

1. Schedule delivery to minimize long-term storage at Project site and to prevent overcrowding of construction spaces.
2. Coordinate delivery with installation time to ensure minimum holding time for items that are flammable, hazardous, easily damaged, or sensitive to deterioration, theft, and other losses.
3. Deliver products to Project site in an undamaged condition in manufacturer's original sealed container or other packaging system, complete with labels and instructions for handling, storing, unpacking, protecting, and installing.
4. Inspect products on delivery to determine compliance with the Contract Documents and to determine that products are undamaged and properly protected.

C. Storage:

1. Store products to allow for inspection and measurement of quantity or counting of units.
2. Store materials in a manner that will not endanger Project structure.
3. Store products that are subject to damage by the elements, under cover in a weathertight enclosure above ground, with ventilation adequate to prevent condensation.

4. Store foam plastic from exposure to sunlight, except to extent necessary for period of installation and concealment.
5. Comply with product manufacturer's written instructions for temperature, humidity, ventilation, and weather-protection requirements for storage.
6. Protect stored products from damage and liquids from freezing.
7. Provide a secure location and enclosure at Project site for storage of materials and equipment by Owner's construction forces. Coordinate location with Owner.

1.7 PRODUCT WARRANTIES

A. Warranties specified in other Sections shall be in addition to, and run concurrent with, other warranties required by the Contract Documents. Manufacturer's disclaimers and limitations on product warranties do not relieve Contractor of obligations under requirements of the Contract Documents.

1. Manufacturer's Warranty: Written warranty furnished by individual manufacturer for a particular product and specifically endorsed by manufacturer to Owner.
2. Special Warranty: Written warranty required by the Contract Documents to provide specific rights for Owner.

B. Special Warranties: Prepare a written document that contains appropriate terms and identification, ready for execution.

1. Manufacturer's Standard Form: Modified to include Project-specific information and properly executed.
2. Specified Form: When specified forms are included with the Specifications, prepare a written document using indicated form properly executed.
3. Refer to Divisions 02 through 49. Sections for specific content requirements and particular requirements for submitting special warranties.

PART 2 - PRODUCTS

2.1 PRODUCT SELECTION PROCEDURES

A. General Product Requirements: Provide products that comply with the Contract Documents, are undamaged and, unless otherwise indicated, are new at time of installation.

1. Provide products complete with accessories, trim, finish, fasteners, and other items needed for a complete installation and indicated use and effect.
2. Standard Products: If available, and unless custom products or nonstandard options are specified, provide standard products of types that have been produced and used successfully in similar situations on other projects.
3. Owner reserves the right to limit selection to products with warranties not in conflict with requirements of the Contract Documents.
4. Where products are accompanied by the term "as selected," Architect will make selection.
5. Descriptive, performance, and reference standard requirements in the Specifications establish salient characteristics of products.

6. Or Equal: For products specified by name and accompanied by the term "or equal," or "or approved equal," or "or approved," comply with requirements in "Comparable Products" Article to obtain approval for use of an unnamed product.

B. Product Selection Procedures:

1. Product: Where Specifications name a single manufacturer and product, provide the named product that complies with requirements. Comparable products or substitutions for Contractor's convenience will not be considered.
2. Manufacturer/Source: Where Specifications name a single manufacturer or source, provide a product by the named manufacturer or source that complies with requirements. Comparable products or substitutions for Contractor's convenience will not be considered.
3. Products:

   a. Restricted List: Where Specifications include a list of names of both manufacturers and products, provide one (1) of the products listed that complies with requirements. Comparable products or substitutions for Contractor's convenience will be considered, unless otherwise indicated.
   b. Non-Restricted List: Where Specifications include a list of names of both available manufacturers and products, provide one (1) of the products listed, or an unnamed product, that complies with requirements. Comply with requirements in "Comparable Products" Article for consideration of an unnamed product.

4. Manufacturers:

   a. Restricted List: Where Specifications include a list of manufacturers' names, provide a product by one (1) of the manufacturers listed that complies with requirements. Comparable products or substitutions for Contractor's convenience will be considered, unless otherwise indicated.
   b. Non-Restricted List: Where Specifications include a list of available manufacturers, provide a product by one (1) of the manufacturers listed, or a product by an unnamed manufacturer, that complies with requirements. Comply with requirements in "Comparable Products" Article for consideration of an unnamed manufacturer's product.

5. Basis-of-Design Product: Where Specifications name a product, or refer to a product indicated on Drawings, and include a list of manufacturers, provide the specified or indicated product or a comparable product by one (1) of the other named manufacturers. Drawings and Specifications indicate sizes, profiles, dimensions, and other characteristics that are based on the product named. Comply with requirements in "Comparable Products" Article for consideration of an unnamed product by one (1) of the other named manufacturers.

C. Visual Matching Specification: Where Specifications require "match Architect's sample", provide a product that complies with requirements and matches Architect's sample. Architect's decision will be final on whether a proposed product matches.

1. If no product available within specified category matches and complies with other specified requirements, comply with requirements in Section 012500 "Substitution Procedures" for proposal of product.

D. Visual Selection Specification: Where Specifications include the phrase "as selected by Architect from manufacturer's full range" or similar phrase, select a product that complies with requirements. Architect will select color, gloss, pattern, density, or texture from manufacturer's product line that includes both standard and premium items.

2.2 COMPARABLE PRODUCTS

A. Conditions for Consideration: Architect will consider Contractor's request for comparable product when the following conditions are satisfied. If the following conditions are not satisfied, Architect may return requests without action, except to record noncompliance with these requirements:

1. Evidence that the proposed product does not require revisions to the Contract Documents, that it is consistent with the Contract Documents and will produce the indicated results, and that it is compatible with other portions of the Work.
2. Detailed, SIDE-BY-SIDE comparison of significant qualities of proposed product with those named in the Specifications. Significant qualities include attributes such as performance, weight, size, durability, visual effect, and specific features and requirements indicated.
3. Evidence that proposed product provides specified warranty.
4. List of similar installations for completed projects with project names and addresses and names and addresses of architects and owners, if requested.
5. Samples, if requested.

PART 3 - EXECUTION (Not Used)

END OF SECTION 016000

SECTION 017300 - EXECUTION

PART 1 - GENERAL

1.1 RELATED DOCUMENTS

A. Drawings and general provisions of the Contract, including General and Supplementary Conditions and other Division 01 Specification Sections, apply to this Section.

1.2 SUMMARY

A. Section includes general administrative and procedural requirements governing execution of the Work including, but not limited to, the following:

1. Installation of the Work.
2. Cutting and patching.
3. Progress cleaning.
4. Starting and adjusting.
5. Protection of installed construction.
6. Correction of the Work.

B. Related Sections:

1. Section 013300 "Submittal Procedures" for submitting surveys.
2. Section 017700 "Closeout Procedures" for submitting final property survey with Project Record Documents, recording of Owner-accepted deviations from indicated lines and levels, and final cleaning.

1.3 DEFINITIONS

A. Cutting: Removal of in-place construction necessary to permit installation or performance of other work.

B. Patching: Fitting and repair work required to restore construction to original conditions after installation of other work.

1.4 INFORMATIONAL SUBMITTALS

A. Qualification Data: For land surveyor licensed in the State of Connecticut.

1.5 QUALITY ASSURANCE

A. Cutting and Patching: Comply with requirements for and limitations on cutting and patching of construction elements.

1. Structural Elements: When cutting and patching structural elements, notify Architect of locations and details of cutting and await directions from the Architect before proceeding. Shore, brace, and support structural element during cutting and patching. Do not cut and patch structural elements in a manner that could change their load-carrying capacity or increase deflection

2. Operational Elements: Do not cut and patch operating elements and related components in a manner that results in reducing their capacity to perform as intended or that results in increased maintenance or decreased operational life or safety.
3. Other Construction Elements: Do not cut and patch other construction elements or components in a manner that could change their load-carrying capacity, that results in reducing their capacity to perform as intended, or that results in increased maintenance or decreased operational life or safety
4. Visual Elements: Do not cut and patch construction in a manner that results in visual evidence of cutting and patching. Do not cut and patch exposed construction in a manner that would, in Architect's opinion, reduce the building's aesthetic qualities. Remove and replace construction that has been cut and patched in a visually unsatisfactory manner.

B. Manufacturer's Installation Instructions: Obtain and maintain on-site manufacturer's written recommendations and instructions for installation of products and equipment.

PART 2 - PRODUCTS

2.1 MATERIALS

A. General: Comply with requirements specified in other Sections.

B. In-Place Materials: Use materials for patching identical to in-place materials. For exposed surfaces, use materials that visually match in-place adjacent surfaces to the fullest extent possible.

1. If identical materials are unavailable or cannot be used, use materials that, when installed, will provide a match acceptable to the Architect for the visual and functional performance of in-place materials.

PART 3 - EXECUTION

3.1 EXAMINATION

A. Existing Conditions: The existence and location of underground and other utilities and construction indicated as existing are not guaranteed. Before beginning sitework, investigate and verify the existence and location of underground utilities, mechanical and electrical systems, and other construction affecting the Work.

1. Furnish location data for work related to Project that must be performed by public utilities serving Project site.

B. Examination and Acceptance of Conditions: Before proceeding with each component of the Work, examine substrates, areas, and conditions, with Installer or Applicator present where indicated, for compliance with requirements for installation tolerances and other conditions affecting performance. Record observations.

1. Written Report: Where a written report listing conditions detrimental to performance of the Work is required by other Sections, include the following:

a. Description of the Work.
b. List of detrimental conditions, including substrates.
c. List of unacceptable installation tolerances.
d. Recommended corrections.

2. Verify compatibility with and suitability of substrates, including compatibility with existing finishes or primers.
3. Examine roughing-in for mechanical and electrical systems to verify actual locations of connections before equipment and fixture installation.
4. Examine walls, floors, and roofs for suitable conditions where products and systems are to be installed.
5. Proceed with installation only after unsatisfactory conditions have been corrected. Proceeding with the Work indicates acceptance of surfaces and conditions.

3.2 PREPARATION

A. Field Measurements: Take field measurements as required to fit the Work properly. Recheck measurements before installing each product. Where portions of the Work are indicated to fit to other construction, verify dimensions of other construction by field measurements before fabrication. Coordinate fabrication schedule with construction progress to avoid delaying the Work.

B. Space Requirements: Verify space requirements and dimensions of items shown diagrammatically on Drawings.

C. Review of Contract Documents and Field Conditions: Immediately on discovery of the need for clarification of the Contract Documents caused by differing field conditions outside the control of the Contractor, submit a request for information to Architect according to requirements in Section 013100 "Project Management and Coordination."

3.3 INSTALLATION

A. General: Locate the Work and components of the Work accurately, in correct alignment and elevation, as indicated.

1. Make vertical work plumb and make horizontal work level.
2. Where space is limited, install components to maximize space available for maintenance and ease of removal for replacement.
3. Conceal pipes, ducts, and wiring in finished areas, unless otherwise indicated.
4. Maintain minimum headroom clearance of 96 inches in occupied spaces and 90 inches in unoccupied spaces.

B. Comply with manufacturer's written instructions and recommendations for installing products in applications indicated.

C. Install products at the time and under conditions that will ensure the best possible results. Maintain conditions required for product performance until Substantial Completion.

D. Conduct construction operations so no part of the Work is subjected to damaging operations or loading in excess of that expected during normal conditions of occupancy.

E. Tools and Equipment: Do not use tools or equipment that produce harmful noise levels.

F. Templates: Obtain and distribute to the parties involved templates for work specified to be factory prepared and field installed. Check Shop Drawings of other work to confirm that adequate provisions are made for locating and installing products to comply with indicated requirements.

G. Attachment: Provide blocking and attachment plates and anchors and fasteners of adequate size and number to securely anchor each component in place, accurately located and aligned with other portions of the Work. Where size and type of attachments are not indicated, verify size and type required for load conditions.

1. Mounting Heights: Where mounting heights are not indicated, mount components at heights directed by Architect.
2. Allow for building movement, including thermal expansion and contraction.
3. Coordinate installation of anchorages. Furnish setting drawings, templates, and directions for installing anchorages, including sleeves, concrete inserts, anchor bolts, and items with integral anchors, that are to be embedded in concrete or masonry. Deliver such items to Project site in time for installation.

H. Joints: Make joints of uniform width. Where joint locations in exposed work are not indicated, arrange joints for the best visual effect. Fit exposed connections together to form hairline joints.

I. Hazardous Materials: Use products, cleaners, and installation materials that are not considered hazardous.

3.4 CUTTING AND PATCHING

A. Cutting and Patching, General: Employ skilled workers to perform cutting and patching. Proceed with cutting and patching at the earliest feasible time, and complete without delay.

1. Cut in-place construction to provide for installation of other components or performance of other construction, and subsequently patch as required to restore surfaces to their original condition.

B. Temporary Support: Provide temporary support of work to be cut.

C. Protection: Protect in-place construction during cutting and patching to prevent damage. Provide protection from adverse weather conditions for portions of Project that might be exposed during cutting and patching operations.

D. Cutting: Cut in-place construction by sawing, drilling, breaking, chipping, grinding, and similar operations, including excavation, using methods least likely to damage elements retained or adjoining construction. If possible, review proposed procedures with original Installer; comply with original Installer's written recommendations.

1. In general, use hand or small power tools designed for sawing and grinding, not hammering and chopping. Cut holes and slots neatly to minimum size required, and with minimum disturbance of adjacent surfaces. Temporarily cover openings when not in use.
2. Finished Surfaces: Cut or drill from the exposed or finished side into concealed surfaces.

3. Concrete and Masonry: Cut using a cutting machine, such as an abrasive saw or a diamond-core drill.
4. Proceed with patching after construction operations requiring cutting are complete.

E. Patching: Patch construction by filling, repairing, refinishing, closing up, and similar operations following performance of other work. Patch with durable seams that are as invisible as practicable. Provide materials and comply with installation requirements specified in other Sections, where applicable.

1. Inspection: Where feasible, test and inspect patched areas after completion to demonstrate physical integrity of installation.
2. Exposed Finishes: Restore exposed finishes of patched areas and extend finish restoration into retained adjoining construction in a manner that will minimize evidence of patching and refinishing.

   a. Clean piping, conduit, and similar features before applying paint or other finishing materials.
   b. Restore damaged pipe covering to its original condition.

3. Ceilings: Patch, repair, or rehang in-place ceilings as necessary to provide an even-plane surface of uniform appearance.
4. Exterior Building Enclosure: Patch components in a manner that restores enclosure to a weathertight condition.

F. Cleaning: Clean areas and spaces where cutting and patching are performed. Remove paint, mortar, oils, putty, and similar materials from adjacent finished surfaces.

3.5 PROGRESS CLEANING

A. General: Clean Project site and work areas daily at the end of each workday, including common areas. Empty or remove dumpsters at the end of each work week. Enforce requirements strictly. Dispose of materials lawfully.

1. Comply with requirements in NFPA 241 for removal of combustible waste materials and debris.
2. Do not hold waste materials more than seven (7) days during normal weather or three (3) days if the temperature is expected to rise above 80 deg F (27 deg C).
3. Containerize hazardous and unsanitary waste materials separately from other waste. Mark containers appropriately and dispose of legally, according to regulations.

   a. Utilize containers intended for holding waste materials of type to be stored.

4. Coordinate progress cleaning for joint-use areas where more than one (1) installer has worked.

B. Site: Maintain Project site free of waste materials and debris.

C. Work Areas: Clean areas where work is in progress to the level of cleanliness necessary for proper execution of the Work.

1. Remove liquid spills promptly.

2. Where dust would impair proper execution of the Work, broom-clean or vacuum the entire work area, as appropriate.

D. Installed Work: Keep installed work clean. Clean installed surfaces according to written instructions of manufacturer or fabricator of product installed, using only cleaning materials specifically recommended. If specific cleaning materials are not recommended, use cleaning materials that are not hazardous to health or property and that will not damage exposed surfaces.

E. Concealed Spaces: Remove debris from concealed spaces before enclosing the space.

F. Exposed Surfaces in Finished Areas: Clean exposed surfaces and protect as necessary to ensure freedom from damage and deterioration at time of Substantial Completion.

G. Waste Disposal: Do not bury or burn waste materials on-site. Do not wash waste materials down sewers or into waterways. Comply with waste disposal requirements in Section 015000 "Temporary Facilities and Controls."

H. During handling and installation, clean and protect construction in progress and adjoining materials already in place. Apply protective covering where required to ensure protection from damage or deterioration at Substantial Completion.

I. Clean and provide maintenance on completed construction as frequently as necessary through the remainder of the construction period. Adjust and lubricate operable components to ensure operability without damaging effects.

J. Limiting Exposures: Supervise construction operations to assure that no part of the construction, completed or in progress, is subject to harmful, dangerous, damaging, or otherwise deleterious exposure during the construction period.

3.6 STARTING AND ADJUSTING

A. Start equipment and operating components to confirm proper operation. Remove malfunctioning units, replace with new units, and retest.

B. Adjust equipment for proper operation. Adjust operating components for proper operation without binding.

C. Test each piece of equipment to verify proper operation. Test and adjust controls and safeties. Replace damaged and malfunctioning controls and equipment.

D. Manufacturer's Field Service: Comply with qualification requirements in Section 014000 "Quality Requirements."

3.7 PROTECTION OF INSTALLED CONSTRUCTION

A. Provide final protection and maintain conditions that ensure installed Work is without damage or deterioration at time of Substantial Completion.

B. Comply with manufacturer's written instructions for temperature and relative humidity.

3.8 CORRECTION OF THE WORK

A. Repair or remove and replace defective construction. Restore damaged substrates and finishes.

1. Repairing includes replacing defective parts, refinishing damaged surfaces, touching up with matching materials, and properly adjusting operating equipment.

B. Restore permanent facilities used during construction to their specified condition.

C. Remove and replace damaged surfaces that are exposed to view if surfaces cannot be repaired without visible evidence of repair.

D. Repair components that do not operate properly. Remove and replace operating components that cannot be repaired.

E. Remove and replace chipped, scratched, and broken glass or reflective surfaces.

END OF SECTION 017300

SECTION 017700 - CLOSEOUT PROCEDURES

PART 1 - GENERAL

1.1 RELATED DOCUMENTS

A. Drawings and general provisions of the Contract, including General and Supplementary Conditions and other Division 01 Specification Sections, apply to this Section.

1.2 SUMMARY

A. Section includes administrative and procedural requirements for contract closeout, including, but not limited to, the following:

1. Substantial Completion procedures.
2. Final completion procedures.
3. Warranties.

B. Related Sections:

1. Section 017300 "Execution" for progress cleaning of Project site.
2. Section 017823 "Operation and Maintenance Data" for operation and maintenance manual requirements.
3. Section 017839 "Project Record Documents" for submitting Record Drawings, Record Specifications, and Record Product Data.
4. Section 017900 "Demonstration and Training" for requirements for instructing Owner's personnel.
5. Divisions 02 through 49 Sections for specific closeout and special cleaning requirements for the Work in those Sections.

1.3 SUBSTANTIAL COMPLETION

A. Preliminary Procedures: Before requesting inspection for determining date of Substantial Completion, complete the following. List items below that are incomplete with request.

1. Prepare a list of items to be completed and corrected (punch list), the value of items on the list, and reasons why the Work is not complete.
2. Advise Owner of pending insurance changeover requirements.
3. Submit specific warranties, workmanship bonds, maintenance service agreements, final certifications, and similar documents.
4. Obtain and submit releases permitting Owner unrestricted use of the Work and access to services and utilities. Include occupancy permits, operating certificates, and similar releases.
5. Prepare and submit Project Record Documents, operation and maintenance manuals, final completion construction photographic documentation, damage or settlement surveys, property surveys, and similar final record information.
6. Deliver tools, spare parts, extra materials, and similar items to location designated by Owner. Label with manufacturer's name and model number where applicable.

7. Make final changeover of permanent locks and deliver keys to Owner. Advise Owner's personnel of changeover in security provisions.
8. Complete startup testing of systems.
9. Submit test/adjust/balance records.
10. Terminate and remove temporary facilities from Project site, along with mockups, construction tools, and similar elements.
11. Advise Owner of changeover in heat and other utilities.
12. Submit changeover information related to Owner's occupancy, use, operation, and maintenance.
13. Complete final cleaning requirements, including touchup painting.
14. Touch up and otherwise repair and restore marred exposed finishes to eliminate visual defects.

B. Inspection: Submit a written request for inspection for Substantial Completion. On receipt of request, Architect will either proceed with inspection or notify Contractor of unfulfilled requirements. Architect will prepare the Certificate of Substantial Completion after inspection or will notify Contractor of items, either on Contractor's list or additional items identified by Architect, that must be completed or corrected before certificate will be issued.

1. Reinspection: Request reinspection when the Work identified in previous inspections as incomplete is completed or corrected.
2. Results of completed inspection will form the basis of requirements for final completion.

1.4 FINAL COMPLETION

A. Preliminary Procedures: Before requesting final inspection for determining final completion, complete the following:

1. Submit a final Application for Payment according to Section 012900 "Payment Procedures."
2. Submit certified copy of Architect's Substantial Completion inspection list of items to be completed or corrected (punch list), endorsed and dated by Architect. The certified copy of the list shall state that each item has been completed or otherwise resolved for acceptance.
3. Submit evidence of final, continuing insurance coverage complying with insurance requirements.
4. Instruct Owner's personnel in operation, adjustment, and maintenance of products, equipment, and systems.
5. Secure and provide both temporary and final Certificate of Occupancy from the Building Official, meeting all local and state permit closeout requirements.

B. Inspection: Submit a written request for final inspection for acceptance. On receipt of request, Architect will either proceed with inspection or notify Contractor of unfulfilled requirements. Architect will prepare a final Certificate for Payment after inspection or will notify Contractor of construction that must be completed or corrected before certificate will be issued.

1. Reinspection: Request reinspection when the Work identified in previous inspections as incomplete is completed or corrected.

1.5 LIST OF INCOMPLETE ITEMS (PUNCH LIST)

A. Organization of List: Include name and identification of each space and area affected by construction operations for incomplete items and items needing correction including, if necessary, areas disturbed by Contractor that are outside the limits of construction. Use **CSI Form 14.1A** or comparable form.

1. Organize list of spaces in sequential order, starting with exterior areas first and proceeding from lowest floor to highest floor.
2. Organize items applying to each space by major element, including categories for ceiling, individual walls, floors, equipment, and building systems.
3. Include the following information at the top of each page:

    a. Project name.
    b. Date.
    c. Name of Architect.
    d. Name of Contractor.
    e. Page number.

4. Submit list of incomplete items in the following format:

    a. PDF electronic file. Architect will return annotated file.

1.6 WARRANTIES

A. Submittal Time: Submit written warranties on request of Architect for designated portions of the Work where commencement of warranties other than date of Substantial Completion is indicated.

B. Partial Occupancy: Submit properly executed warranties within fifteen (15) days of completion of designated portions of the Work that are completed and occupied or used by Owner during construction period by separate agreement with Contractor.

C. Organize warranty documents into an orderly sequence based on the table of contents of the Project Manual.

1. Bind warranties and bonds in heavy-duty, three-ring, vinyl-covered, loose-leaf binders, thickness as necessary to accommodate contents, and sized to receive 8½-by-11-inch paper.
2. Provide heavy paper dividers with plastic-covered tabs for each separate warranty. Mark tab to identify the product or installation. Provide a typed description of the product or installation, including the name of the product and the name, address, and telephone number of Installer.
3. Identify each binder on the front and spine with the typed or printed title "WARRANTIES," Project name, and name of Contractor.
4. Scan warranties and bonds and assemble complete warranty and bond submittal package into a single indexed electronic PDF file with links enabling navigation to each item. Provide table of contents at beginning of document.

D. Provide additional copies of each warranty to include in operation and maintenance manuals.

PART 2 - PRODUCTS

2.1 MATERIALS

A. Cleaning Agents: Use cleaning materials and agents recommended by manufacturer or fabricator of the surface to be cleaned. Do not use cleaning agents that are potentially hazardous to health or property or that might damage finished surfaces.

PART 3 - EXECUTION (Not Used)

END OF SECTION 017700

SECTION 017823 - OPERATION AND MAINTENANCE DATA

PART 1 - GENERAL

1.1 RELATED DOCUMENTS

A. Drawings and general provisions of the Contract, including General and Supplementary Conditions and other Division 01 Specification Sections, apply to this Section.

1.2 SUMMARY

A. Section includes administrative and procedural requirements for preparing operation and maintenance manuals, including the following:

1. Operation and maintenance documentation directory.
2. Emergency manuals.
3. Systems and equipment operation manuals.
4. Systems and equipment maintenance manuals.
5. Product maintenance manuals.

B. Related Sections:

1. Section 013300 "Submittal Procedures" for submitting copies of submittals for operation and maintenance manuals.
2. Divisions 02 through 49 Sections for specific operation and maintenance manual requirements for the Work in those Sections.

1.3 DEFINITIONS

A. System: An organized collection of parts, equipment, or subsystems united by regular interaction.

B. Subsystem: A portion of a system with characteristics similar to a system.

1.4 CLOSEOUT SUBMITTALS

A. Manual Content: Operations and maintenance manual content is specified in individual specification sections, and as reviewed and approved at the time of Section submittals. Submit reviewed manual content formatted and organized as required by this Section.

1. Architect will comment on whether content of operation and maintenance submittals is acceptable.
2. Where applicable, clarify and update reviewed manual content to correspond to revisions and field conditions.

B. Format: Submit operations and maintenance manuals in the following format:

1. Two (2) thumb drives. Enable review comments on draft submittals.

2. Two (2) paper copies. Include a complete operation and maintenance directory. Enclose title pages and directories in clear plastic sleeves. Architect will return both copies to be given to the Owner.

C. Initial Manual Submittal: Submit draft copy of each manual at least thirty (30) days before commencing demonstration and training. Architect will comment on whether general scope and content of manual are acceptable.

D. Final Manual Submittal: Submit each manual in final form prior to requesting inspection for Substantial Completion and at least fifteen (15) days before commencing demonstration and training. Architect will return copy with comments.

1. Correct or modify each manual to comply with Architect's comments. Submit copies of each corrected manual within fifteen (15) days of receipt of Architect's comments and prior to commencing demonstration and training.

E. Comply with Section 017700 "Closeout Procedures" for schedule for submitting operation and maintenance documentation.

1.5 FORMAT OF OPERATION AND MAINTENANCE MANUALS

A. Manuals, Electronic Files: Submit manuals in the form of a multiple file composite electronic PDF file for each manual type required.

1. Electronic Files: Use electronic files prepared by manufacturer where available. Where scanning of paper documents is required, configure scanned file for minimum readable file size.
2. File Names and Bookmarks: Bookmark individual documents based on file names. Name document files to correspond to system, subsystem, and equipment names used in manual directory and table of contents. Group documents for each system and subsystem into individual composite bookmarked files, then create composite manual, so that resulting bookmarks reflect the system, subsystem, and equipment names in a readily navigated file tree. Configure electronic manual to display bookmark panel on opening file.

B. Manuals, Paper Copy: Submit manuals in the form of hard copy, bound and labeled volumes.

1. Binders: Heavy-duty, three-ring, vinyl-covered, loose-leaf binders, in thickness necessary to accommodate contents, sized to hold 8½-by-11-inch paper; with clear plastic sleeve on spine to hold label describing contents and with pockets inside covers to hold folded oversize sheets.

a. If two (2) or more binders are necessary to accommodate data of a system, organize data in each binder into groupings by subsystem and related components. Cross-reference other binders if necessary to provide essential information for proper operation or maintenance of equipment or system.
b. Identify each binder on front and spine, with printed title "OPERATION AND MAINTENANCE MANUAL," Project title or name, subject matter of contents, and indicate Specification Section number on bottom of spine. Indicate volume number for multiple-volume sets.

2. Dividers: Heavy-paper dividers with plastic-covered tabs for each section of the manual. Mark each tab to indicate contents. Include typed list of products and major components of equipment included in the section on each divider, cross-referenced to Specification Section number and title of Project Manual.
3. Protective Plastic Sleeves: Transparent plastic sleeves designed to enclose diagnostic software storage media for computerized electronic equipment. Enclose title pages and directories in clear plastic sleeves.
4. Supplementary Text: Prepared on 8½-by-11-inch white bond paper.
5. Drawings: Attach reinforced, punched binder tabs on drawings and bind with text.

    a. If oversize drawings are necessary, fold drawings to same size as text pages and use as foldouts.
    b. If drawings are too large to be used as foldouts, fold and place drawings in labeled envelopes and bind envelopes in rear of manual. At appropriate locations in manual, insert typewritten pages indicating drawing titles, descriptions of contents, and drawing locations.

1.6 REQUIREMENTS FOR EMERGENCY, OPERATION, AND MAINTENANCE MANUALS

A. Organization of Manuals: Unless otherwise indicated, organize each manual into a separate section for each system and subsystem, and a separate section for each piece of equipment not part of a system. Each manual shall contain the following materials, in the order listed:

1. Title page.
2. Table of contents.
3. Manual contents.

B. Title Page: Include the following information:

1. Subject matter included in manual.
2. Name and address of Project.
3. Name and address of Owner.
4. Date of submittal.
5. Name and contact information for Contractor.
6. Name and contact information for Architect.
7. Names and contact information for major consultants to the Architect that designed the systems contained in the manuals.
8. Cross-reference to related systems in other operation and maintenance manuals.

C. Table of Contents: List each product included in manual, identified by product name, indexed to the content of the volume, and cross-referenced to Specification Section number in Project Manual.

1. If operation or maintenance documentation requires more than one (1) volume to accommodate data, include comprehensive table of contents for all volumes in each volume of the set.

D. Manual Contents: Organize into sets of manageable size. Arrange contents alphabetically by system, subsystem, and equipment. If possible, assemble instructions for subsystems, equipment, and components of one (1) system into a single binder.

1.7 EMERGENCY MANUALS

A. Emergency Manual: Assemble a complete set of emergency information indicating procedures for use by emergency personnel and by Owner's operating personnel for types of emergencies indicated.

B. Content: Organize manual into a separate section for each of the following:

1. Type of emergency.
2. Emergency instructions.
3. Emergency procedures.

C. Type of Emergency: Where applicable for each type of emergency indicated below, include instructions and procedures for each system, subsystem, piece of equipment, and component:

1. Fire.
2. Flood.
3. Gas leak.
4. Water leak.
5. Power failure.
6. Water outage.
7. System, subsystem, or equipment failure.
8. Chemical release or spill.

D. Emergency Instructions: Describe and explain warnings, trouble indications, error messages, and similar codes and signals. Include responsibilities of Owner's operating personnel for notification of Installer, supplier, and manufacturer to maintain warranties.

E. Emergency Procedures: Include the following, as applicable:

1. Instructions on stopping.
2. Shutdown instructions for each type of emergency.
3. Operating instructions for conditions outside normal operating limits.
4. Required sequences for electric or electronic systems.
5. Special operating instructions and procedures.

1.8 SYSTEMS AND EQUIPMENT OPERATION MANUALS

A. Systems and Equipment Operation Manual: Assemble a complete set of data indicating operation of each system, subsystem, and piece of equipment not part of a system. Include information required for daily operation and management, operating standards, and routine and special operating procedures.

1. Engage a factory-authorized service representative to assemble and prepare information for each system, subsystem, and piece of equipment not part of a system.
2. Prepare a separate manual for each system and subsystem, in the form of an instructional manual for use by Owner's operating personnel.

B. Content: In addition to requirements in this Section, include operation data required in individual Specification Sections and the following information:

1. System, subsystem, and equipment descriptions. Use designations for systems and equipment indicated on Contract Documents.
2. Performance and design criteria if Contractor is delegated design responsibility.
3. Operating standards.
4. Operating procedures.
5. Operating logs.
6. Wiring diagrams.
7. Control diagrams.
8. Piped system diagrams.
9. Precautions against improper use.
10. License requirements including inspection and renewal dates.

C. Descriptions: Include the following:

1. Product name and model number. Use designations for products indicated on Contract Documents.
2. Manufacturer's name.
3. Equipment identification with serial number of each component.
4. Equipment function.
5. Operating characteristics.
6. Limiting conditions.
7. Performance curves.
8. Engineering data and tests.
9. Complete nomenclature and number of replacement parts.

D. Operating Procedures: Include the following, as applicable:

1. Startup procedures.
2. Equipment or system break-in procedures.
3. Routine and normal operating instructions.
4. Regulation and control procedures.
5. Instructions on stopping.
6. Normal shutdown instructions.
7. Seasonal and weekend operating instructions.
8. Required sequences for electric or electronic systems.
9. Special operating instructions and procedures.

E. Systems and Equipment Controls: Describe the sequence of operation, and diagram controls as installed.

F. Piped Systems: Diagram piping as installed, and identify color-coding where required for identification.

1.9 SYSTEMS AND EQUIPMENT MAINTENANCE MANUALS

A. Systems and Equipment Maintenance Manuals: Assemble a complete set of data indicating maintenance of each system, subsystem, and piece of equipment not part of a system. Include manufacturers' maintenance documentation, preventive maintenance procedures and frequency, repair procedures, wiring and systems diagrams, lists of spare parts, and warranty information.

1. Engage a factory-authorized service representative to assemble and prepare information for each system, subsystem, and piece of equipment not part of a system.
2. Prepare a separate manual for each system and subsystem, in the form of an instructional

B. Content: For each system, subsystem, and piece of equipment not part of a system, include source information, manufacturers' maintenance documentation, maintenance procedures, maintenance and service schedules, spare parts list and source information, maintenance service contracts, and warranty and bond information, as described below.

C. Source Information: List each system, subsystem, and piece of equipment included in manual, identified by product name and arranged to match manual's table of contents. For each product, list name, address, and telephone number of Installer or supplier and maintenance service agent, and cross-reference Specification Section number and title in Project Manual and drawing or schedule designation or identifier where applicable.

D. Manufacturers' Maintenance Documentation: Include the following information for each component part or piece of equipment:

1. Standard maintenance instructions and bulletins; include only sheets pertinent to product or component installed. Mark each sheet to identify each product or component incorporated into the Work. If data include more than one (1) item in a tabular format, identify each item using appropriate references from the Contract Documents. Identify data applicable to the Work and delete references to information not applicable.

    a. Prepare supplementary text if manufacturers' standard printed data are not available and where the information is necessary for proper operation and maintenance of equipment or systems.

2. Drawings, diagrams, and instructions required for maintenance, including disassembly and component removal, replacement, and assembly.
3. Identification and nomenclature of parts and components.
4. List of items recommended to be stocked as spare parts.

E. Maintenance Procedures: Include the following information and items that detail essential maintenance procedures:

1. Test and inspection instructions.
2. Troubleshooting guide.
3. Precautions against improper maintenance.
4. Disassembly; component removal, repair, and replacement; and reassembly instructions.
5. Aligning, adjusting, and checking instructions.

F. Maintenance and Service Schedules: Include service and lubrication requirements, list of required lubricants for equipment, and separate schedules for preventive and routine maintenance and service with standard time allotment.

1. Scheduled Maintenance and Service: Tabulate actions for daily, weekly, monthly, quarterly, semiannual, and annual frequencies.
2. Maintenance and Service Record: Include manufacturers' forms for recording maintenance.

G. Spare Parts List and Source Information: Include lists of replacement and repair parts, with parts identified and cross-referenced to manufacturers' maintenance documentation and local sources of maintenance materials and related services.

H. Maintenance Service Contracts: Include copies of maintenance agreements with name and telephone number of service agent.

I. Warranties and Bonds: Include copies of warranties and bonds and lists of circumstances and conditions that would affect validity of warranties or bonds.

1. Include procedures to follow and required notifications for warranty claims.

J. Drawings: Prepare drawings supplementing manufacturers' printed data to illustrate the relationship of component parts of equipment and systems and to illustrate control sequence and flow diagrams. Coordinate these drawings with information contained in record Drawings to ensure correct illustration of completed installation.

1. Do not use original project record documents as part of maintenance manuals.

1.10 PRODUCT MAINTENANCE MANUALS

A. Product Maintenance Manual: Assemble a complete set of maintenance data indicating care and maintenance of each product, material, and finish incorporated into the Work.

B. Content: Organize manual into a separate section for each product, material, and finish. Include source information, product information, maintenance procedures, repair materials and sources, and warranties and bonds, as described below.

C. Source Information: List each product included in manual, identified by product name and arranged to match manual's table of contents. For each product, list name, address, and telephone number of Installer or supplier and maintenance service agent, and cross-reference Specification Section number and title in Project Manual and drawing or schedule designation or identifier where applicable.

D. Product Information: Include the following, as applicable:

1. Product name and model number.
2. Manufacturer's name.
3. Color, pattern, and texture.
4. Material and chemical composition.
5. Reordering information for specially manufactured products.

E. Maintenance Procedures: Include manufacturer's written recommendations and the following:

1. Inspection procedures.
2. Types of cleaning agents to be used and methods of cleaning.
3. List of cleaning agents and methods of cleaning detrimental to product.
4. Schedule for routine cleaning and maintenance.
5. Repair instructions.

F. Repair Materials and Sources: Include lists of materials and local sources of materials and related services.

G. Warranties and Bonds: Include copies of warranties and bonds and lists of circumstances and conditions that would affect validity of warranties or bonds.

1. Include procedures to follow and required notifications for warranty claims.

PART 2 - PRODUCTS (Not Used)

PART 3 - EXECUTION (Not Used)

END OF SECTION 017823

SECTION 017839 - PROJECT RECORD DOCUMENTS

PART 1 - GENERAL

1.1 RELATED DOCUMENTS

A. Drawings and general provisions of the Contract, including General and Supplementary Conditions and other Division 01 Specification Sections, apply to this Section.

1.2 SUMMARY

A. Section includes administrative and procedural requirements for project record documents, including the following:

1. Record Drawings.
2. Record Specifications.
3. Record Product Data.
4. Miscellaneous record submittals.

B. Related Sections:

1. Section 017700 "Closeout Procedures" for general closeout procedures.
2. Section 017823 "Operation and Maintenance Data" for operation and maintenance manual requirements.
3. Divisions 02 through 49 Sections for specific requirements for project record documents of the Work in those Sections.

1.3 CLOSEOUT SUBMITTALS

A. Record Drawings: Comply with the following:

1. Number of Copies: Submit one (1) set(s) of marked-up record prints.

B. Record Specifications: Submit one (1) paper copy of Project's Specifications, including addenda and contract modifications.

C. Record Product Data: Submit one (1) paper copy of each submittal.

1. Where record Product Data are required as part of operation and maintenance manuals, submit duplicate marked-up Product Data as a component of manual.

PART 2 - PRODUCTS

2.1 RECORD DRAWINGS

A. Record Prints: Maintain one (1) set of marked-up paper copies of the Contract Drawings and Shop Drawings.

1. Preparation: Mark record prints to show the actual installation where installation varies from that shown originally. Require individual or entity who obtained record data, whether individual or entity is Installer, subcontractor, or similar entity, to provide information for preparation of corresponding marked-up record prints.

    a. Give particular attention to information on concealed elements that would be difficult to identify or measure and record later.
    b. Accurately record information in an acceptable drawing technique.
    c. Record data as soon as possible after obtaining it.
    d. Record and check the markup before enclosing concealed installations.
    e. Cross-reference record prints to corresponding archive photographic documentation.

2. Content: Types of items requiring marking include, but are not limited to, the following:

    a. Dimensional changes to Drawings.
    b. Revisions to details shown on Drawings.
    c. Locations and depths of underground utilities.
    d. Revisions to routing of piping and conduits.
    e. Revisions to electrical circuitry.
    f. Actual equipment locations.
    g. Duct size and routing.
    h. Locations of concealed internal utilities.
    i. Changes made by Change Order or Construction Change Directive.
    j. Changes made following Architect's written orders.
    k. Details not on the original Contract Drawings.
    l. Field records for variable and concealed conditions.
    m. Record information on the Work that is shown only schematically.

3. Mark the Contract Drawings and Shop Drawings completely and accurately. Utilize personnel proficient at recording graphic information in production of marked-up record prints.
4. Mark record sets with erasable, red-colored pencil. Use other colors to distinguish between changes for different categories of the Work at same location.
5. Mark important additional information that was either shown schematically or omitted from original Drawings.
6. Note Construction Change Directive numbers, alternate numbers, Change Order numbers, and similar identification, where applicable.

B. Format: Identify and date each record Drawing; include the designation "PROJECT RECORD DRAWING" in a prominent location.

1. Record Prints: Organize record prints and newly prepared record Drawings into manageable sets. Bind each set with durable paper cover sheets. Include identification on cover sheets.
2. Format: Paper copy.
3. Identification: As follows:

    a. Project name.
    b. Date.
    c. Designation "PROJECT RECORD DRAWINGS."

d. Name of Architect.
e. Name of Contractor.

2.2 RECORD SPECIFICATIONS

A. Preparation: Mark Specifications to indicate the actual product installation where installation varies from that indicated in Specifications, addenda, and contract modifications.

1. Give particular attention to information on concealed products and installations that cannot be readily identified and recorded later.
2. Mark copy with the proprietary name and model number of products, materials, and equipment furnished, including substitutions and product options selected.
3. Record the name of manufacturer, supplier, Installer, and other information necessary to provide a record of selections made.
4. For each principal product, indicate whether record Product Data has been submitted in operation and maintenance manuals instead of submitted as record Product Data.
5. Note related Change Orders, record Product Data, and record Drawings where applicable.

B. Format: Submit record Specifications as paper copy.

2.3 RECORD PRODUCT DATA

A. Preparation: Mark Product Data to indicate the actual product installation where installation varies substantially from that indicated in Product Data submittal.

1. Give particular attention to information on concealed products and installations that cannot be readily identified and recorded later.
2. Include significant changes in the product delivered to Project site and changes in manufacturer's written instructions for installation.
3. Note related Change Orders, record Specifications, and record Drawings where applicable.

B. Format: Submit record Product Data as paper copy.

1. Include record Product Data directory organized by specification section number and title, electronically linked to each item of record Product Data.

PART 3 - EXECUTION

3.1 RECORDING AND MAINTENANCE

A. Recording: Maintain one (1) copy of each submittal during the construction period for project record document purposes. Post changes and modifications to project record documents as they occur; do not wait until the end of Project.

B. Maintenance of Record Documents and Samples: Store record documents and Samples in the field office apart from the Contract Documents used for construction. Do not use project record documents for construction purposes. Maintain record documents in good order and in a clean, dry, legible condition, protected from deterioration and loss. Provide access to project record documents for Architect's reference during normal working hours.

END OF SECTION 017839

SECTION 017900 - DEMONSTRATION AND TRAINING

PART 1 - GENERAL

1.1 RELATED DOCUMENTS

A. Drawings and general provisions of the Contract, including General and Supplementary Conditions and other Division 01 Specification Sections, apply to this Section.

1.2 SUMMARY

A. Section includes administrative and procedural requirements for instructing Owner's personnel, including the following:

1. Demonstration of operation of systems, subsystems, and equipment.
2. Training in operation and maintenance of systems, subsystems, and equipment.

B. Related Sections:

1. Divisions 02 through 49 Sections for specific requirements for demonstration and training for products in those Sections.

1.3 INFORMATIONAL SUBMITTALS

A. Instruction Program: Submit outline of instructional program for demonstration and training, including a list of training modules and a schedule of proposed dates, times, length of instruction time, and instructors' names for each training module. Include learning objective and outline for each training module.

B. Attendance Record: For each training module, submit list of participants and length of instruction time.

C. Evaluations: For each participant and for each training module, submit results and documentation of performance-based test.

1.4 QUALITY ASSURANCE

A. Facilitator Qualifications: A firm or individual experienced in training or educating maintenance personnel in a training program similar in content and extent to that indicated for this Project, and whose work has resulted in training or education with a record of successful learning performance.

B. Instructor Qualifications: A factory-authorized service representative, complying with requirements in Section 014000 "Quality Requirements," experienced in operation and maintenance procedures and training.

C. Pre-instruction Conference: Conduct conference at Project site to comply with requirements in Section 013100 "Project Management and Coordination". Review methods and procedures related to demonstration and training including, but not limited to, the following:

1. Inspect and discuss locations and other facilities required for instruction.
2. Review and finalize instruction schedule and verify availability of educational materials, instructors' personnel, audiovisual equipment, and facilities needed to avoid delays.
3. Review required content of instruction.
4. For instruction that must occur outside, review weather and forecasted weather conditions and procedures to follow if conditions are unfavorable.

1.5 COORDINATION

A. Coordinate instruction schedule with Owner's operations. Adjust schedule as required to minimize disrupting Owner's operations.

B. Coordinate instructors, including providing notification of dates, times, length of instruction time, and course content.

C. Coordinate content of training modules with content of approved emergency, operation, and maintenance manuals. Do not submit instruction program until operation and maintenance data has been reviewed and approved by Architect.

PART 2 - PRODUCTS

2.1 INSTRUCTION PROGRAM

A. Program Structure: Develop an instruction program that includes individual training modules for each system and for equipment not part of a system, as required by individual Specification Sections.

B. Training Modules: Develop a learning objective and teaching outline for each module. Include a description of specific skills and knowledge that participant is expected to master. For each module, include instruction for the following as applicable to the system, equipment, or component:

1. Basis of System Design, Operational Requirements, and Criteria: Include the following:

   a. System, subsystem, and equipment descriptions.
   b. Performance and design criteria if Contractor is delegated design responsibility.
   c. Operating standards.
   d. Regulatory requirements.
   e. Equipment function.
   f. Operating characteristics.
   g. Limiting conditions.
   h. Performance curves.

2. Documentation: Review the following items in detail:

   a. Emergency manuals.
   b. Operations manuals.
   c. Maintenance manuals.
   d. Project record documents.
   e. Identification systems.

f. Warranties and bonds.
g. Maintenance service agreements and similar continuing commitments.

3. Emergencies: Include the following, as applicable:

a. Instructions on meaning of warnings, trouble indications, and error messages.
b. Instructions on stopping.
c. Shutdown instructions for each type of emergency.
d. Operating instructions for conditions outside of normal operating limits.
e. Sequences for electric or electronic systems.
f. Special operating instructions and procedures.

4. Operations: Include the following, as applicable:

a. Startup procedures.
b. Equipment or system break-in procedures.
c. Routine and normal operating instructions.
d. Regulation and control procedures.
e. Control sequences.
f. Safety procedures.
g. Instructions on stopping.
h. Normal shutdown instructions.
i. Operating procedures for emergencies.
j. Operating procedures for system, subsystem, or equipment failure.
k. Seasonal and weekend operating instructions.
l. Required sequences for electric or electronic systems.
m. Special operating instructions and procedures.

5. Adjustments: Include the following:

a. Alignments.
b. Checking adjustments.
c. Noise and vibration adjustments.
d. Economy and efficiency adjustments.

6. Troubleshooting: Include the following:

a. Diagnostic instructions.
b. Test and inspection procedures.

7. Maintenance: Include the following:

a. Inspection procedures.
b. Types of cleaning agents to be used and methods of cleaning.
c. List of cleaning agents and methods of cleaning detrimental to product.
d. Procedures for routine cleaning
e. Procedures for preventive maintenance.
f. Procedures for routine maintenance.
g. Instruction on use of special tools.

8. Repairs: Include the following:

a. Diagnosis instructions.
b. Repair instructions.
c. Disassembly; component removal, repair, and replacement; and reassembly instructions.
d. Instructions for identifying parts and components.
e. Review of spare parts needed for operation and maintenance.

PART 3 - EXECUTION

3.1 PREPARATION

A. Assemble educational materials necessary for instruction, including documentation and training module. Assemble training modules into a training manual organized in coordination with requirements in Section 017823 "Operations and Maintenance Data."

B. Set up instructional equipment at instruction location.

3.2 INSTRUCTION

A. Facilitator: Engage a qualified facilitator to prepare instruction program and training modules, to coordinate instructors, and to coordinate between Contractor and Owner for number of participants, instruction times, and location.

B. Engage qualified instructors to instruct Owner's personnel to adjust, operate, and maintain systems, subsystems, and equipment not part of a system.

1. Architect will furnish an instructor to describe basis of system design, operational requirements, criteria, and regulatory requirements.
2. Owner will furnish Contractor with names and positions of participants.

C. Scheduling: Provide instruction at mutually agreed on times. For equipment that requires seasonal operation, provide similar instruction at start of each season.

1. Schedule training with Owner**,** with at least seven (7) days advance notice.

D. Evaluation: At conclusion of each training module, assess and document each participant's mastery of module by use of a demonstration performance-based test.

E. Cleanup: Collect used and leftover educational materials and give to Owner. Remove instructional equipment. Restore systems and equipment to condition existing before initial training use.

END OF SECTION 017900

SECTION 023000 - SOIL INVESTIGATION DATA

PART 1 - GENERAL

1.1 SUBSURFACE CONDITIONS

A. The owner has explored subsurface conditions by having authorized the making of borings on site.

B. Factual subsurface information (boring logs and physical soils laboratory testing) have been included as part of the Project Manual. The logs describe subsurface conditions encountered at the exploration locations at the time explorations were made. Actual subsurface conditions may vary due to conditions not evident at the time explorations were made, and therefore no warranties, expressed or implied, are made as to accuracy of subsurface information provided herein.

C. No warranty is made of the continuity of strata or material between the exploration locations. The stratification lines on the logs represent approximate boundaries between soil types. The actual transitions may be gradual.

D. Boring and test pit locations shown on the drawings are approximate only and the Owner makes no representations regarding correctness of such information.

E. Bidders shall make their own deductions of subsurface conditions, which may affect methods or cost of construction. Bidders may, at their own expense, and upon applications to the OWNER, conduct additional subsurface testing.

1.2 GEOTECHNICAL ENGINEERING REPORTS AND SAMPLES

A. Reports entitled "Geotechnical Engineering Assessment, Proposed Senior Center, “Lebanon Avenue and Louis Lane, Colchester, Connecticut,” dated December 15, 2017, as prepared by GeoInsight, Environmental Strategy & Engineering for use by the Architect and Engineer in the design of the project. Part of the information contained in these reports is interpretive (not factual) and therefore shall not be considered as part of the information provided for this contract. However, the Contractor is entitled to the physical data (free of interpretation) including the data presented in the boring logs and results of physical soils laboratory testing.

PART 2 - PRODUCTS (Not Used)

PART 3 - EXECUTION (Not Used)

END OF SECTION 023000

3373-63-f518-spec 023000 soil investigation data

SECTION 031000 - CONCRETE FORMING AND ACCESSORIES

PART 1 - GENERAL

1.1 SUMMARY

A. Section Includes:

1. Form-facing material for cast-in-place concrete.

1.2 ACTION SUBMITTALS

A. Product Data: For each of the following:

1. Exposed surface form-facing material.
2. Concealed surface form-facing material.
3. Form ties.
4. Waterstops.
5. Form-release agent.

1.3 INFORMATIONAL SUBMITTALS

A. Field quality-control reports.

PART 2 - PRODUCTS

2.1 PERFORMANCE REQUIREMENTS

A. Concrete Formwork: Design, engineer, erect, shore, brace, and maintain formwork, shores, and reshores in accordance with ACI 301, to support vertical, lateral, static, and dynamic loads, and construction loads that might be applied, until structure can support such loads, so that resulting concrete conforms to the required shapes, lines, and dimensions.

1. Design wood panel forms in accordance with APA's "Concrete Forming Design/Construction Guide."
2. Design formwork to limit deflection of form-facing material to 1/240 of center-to-center spacing of supports.

2.2 FORM-FACING MATERIALS

A. Concealed Surface Form-Facing Material: Lumber, plywood, metal, plastic, or another approved material.

1. Provide lumber dressed on at least two (2) edges and one side for tight fit.

2.3 WATERSTOPS

A. Flexible PVC Waterstops: U.S. Army Corps of Engineers CRD-C 572, for embedding in concrete to prevent passage of fluids through joints, with factory fabricate corners, intersections, and directional changes.

1. Manufacturers: Subject to compliance with requirements, provide products by one (1) of the following:

   a. BoMetals, Inc.
   b. Sika Corporation
   c. Vinylex Waterstop & Accessories

2. Profile: Flat dumbbell with center bulb.
3. Dimensions: 6 inches by 3/8-inch-thick; non-tapered.

B. Self-Expanding Rubber Strip Waterstops: Manufactured rectangular or trapezoidal strip, bentonite-free hydrophilic polymer-modified chloroprene rubber, for adhesive bonding to concrete, 3/8-by-¾-inch.

1. Manufacturers: Subject to compliance with requirements, provide products by one (1) of the following:

   a. CETCO
   b. GCP Applied Technologies Inc.
   c. Sika Corporation

2.4 RELATED MATERIALS

A. Reglets: Fabricate reglets of not less than 0.022-inch-thick, galvanized-steel sheet. Temporarily fill or cover face opening of reglet to prevent intrusion of concrete or debris.

B. Dovetail Anchor Slots: Hot-dip galvanized-steel sheet, not less than 0.034-inch-thick, with bent tab anchors. Temporarily fill or cover face opening of slots to prevent intrusion of concrete or debris.

C. Chamfer Strips: Wood, metal, PVC, or rubber strips, ¾-by-¾-inch, minimum.

D. Rustication Strips: Wood, metal, PVC, or rubber strips, kerfed for ease of form removal.

E. Form-Release Agent: Commercially formulated form-release agent that does not bond with, stain, or adversely affect concrete surfaces and does not impair subsequent treatments of concrete surfaces.

1. Formulate form-release agent with rust inhibitor for steel form-facing materials.
2. Form release agent for form liners shall be acceptable to form liner manufacturer.

F. Form Ties: Factory-fabricated, removable or snap-off, glass-fiber-reinforced plastic or metal form ties designed to resist lateral pressure of fresh concrete on forms and to prevent spalling of concrete on removal.

1. Furnish units that leave no corrodible metal closer than 1-inch to the plane of exposed concrete surface.
2. Furnish ties that, when removed, leave holes no larger than 1-inch in diameter in concrete surface.
3. Furnish ties with integral water-barrier plates to walls indicated to receive dampproofing or waterproofing.

PART 3 - EXECUTION

3.1 INSTALLATION OF FORMWORK

A. Comply with ACI 301.

B. Construct formwork, so concrete members and structures are of size, shape, alignment, elevation, and position indicated, within tolerance limits of ACI 117 and to comply with the Surface Finish designations specified in Section 033000 "Cast-In-Place Concrete" for as-cast finishes.

C. Limit concrete surface irregularities as follows:

1. Surface Finish-1.0: ACI 117 Class D, 1-inch.
2. Surface Finish-2.0: ACI 117 Class B, ¼-inch.
3. Surface Finish-3.0: ACI 117 Class A, 1/8-inch.

D. Construct forms tight enough to prevent loss of concrete mortar.

1. Minimize joints.
2. Exposed Concrete: Symmetrically align joints in forms.

E. Construct removable forms for easy removal without hammering or prying against concrete surfaces.

1. Provide crush or wrecking plates where stripping may damage cast-concrete surfaces.
2. Provide top forms for inclined surfaces steeper than 1.5 horizontal to 1 vertical.
3. Install keyways, reglets, recesses, and other accessories, for easy removal.

F. Do not use rust-stained, steel, form-facing material.

G. Set edge forms, bulkheads, and intermediate screed strips for slabs to achieve required elevations and slopes in finished concrete surfaces.

1. Provide and secure units to support screed strips.
2. Use strike-off templates or compacting-type screeds.

H. Provide temporary openings for cleanouts and inspection ports where interior area of formwork is inaccessible.

1. Close openings with panels tightly fitted to forms and securely braced to prevent loss of concrete mortar.
2. Locate temporary openings in forms at inconspicuous locations.

I. Chamfer exterior corners and edges of permanently exposed concrete.

J. At construction joints, overlap forms onto previously placed concrete not less than 12 inches.

K. Form openings, chases, offsets, sinkages, keyways, reglets, blocking, screeds, and bulkheads required in the Work.

1. Determine sizes and locations from trades providing such items.
2. Obtain written approval of Architect prior to forming openings not indicated on Drawings.

L. Construction and Movement Joints:

1. Construct joints true to line with faces perpendicular to surface plane of concrete.
2. Install so strength and appearance of concrete are not impaired, at locations indicated or as approved by Architect.
3. Place joints perpendicular to main reinforcement.
4. Locate joints for beams, slabs, joists, and girders in the middle third of spans.

    a. Offset joints in girders a minimum distance of twice the beam width from a beam-girder intersection.

5. Locate horizontal joints in walls and columns at underside of floors, slabs, beams, and girders and at the top of footings or floor slabs.
6. Space vertical joints in walls as indicated on Drawings.

    a. Locate joints beside piers integral with walls, near corners, and in concealed locations where possible.

M. Provide temporary ports or openings in formwork where required to facilitate cleaning and inspection.

1. Locate ports and openings in bottom of vertical forms, in inconspicuous location, to allow flushing water to drain.
2. Close temporary ports and openings with tight-fitting panels, flush with inside face of form, and neatly fitted, so joints will not be apparent in exposed concrete surfaces.

N. Clean forms and adjacent surfaces to receive concrete. Remove chips, wood, sawdust, dirt, and other debris just before placing concrete.

O. Retighten forms and bracing before placing concrete, as required, to prevent mortar leaks and maintain proper alignment.

P. Coat contact surfaces of forms with form-release agent, according to manufacturer's written instructions, before placing reinforcement.

3.2 INSTALLATION OF EMBEDDED ITEMS

A. Place and secure anchorage devices and other embedded items required for adjoining work that is attached to or supported by cast-in-place concrete.

1. Use setting drawings, templates, diagrams, instructions, and directions furnished with items to be embedded.

2. Install anchor rods, accurately located, to elevations required and complying with tolerances in Section 7.5 of AISC 303.
3. Install reglets to receive waterproofing and to receive through-wall flashings in outer face of concrete frame at exterior walls, where flashing is shown at lintels, shelf angles, and other conditions.
4. Install dovetail anchor slots in concrete structures, as indicated on Drawings.
5. Clean embedded items immediately prior to concrete placement.

3.3 INSTALLATION OF WATERSTOPS

A. Flexible Waterstops: Install in construction joints and at other joints indicated to form a continuous diaphragm.

1. Install in longest lengths practicable.
2. Locate waterstops in center of joint unless otherwise indicated on Drawings.
3. Allow clearance between waterstop and reinforcing steel of not less than two (2) times the largest concrete aggregate size specified in Section 033000 "Cast-In-Place Concrete."
4. Secure waterstops in correct position at 12 inches on center.
5. Field fabricate joints in accordance with manufacturer's instructions using heat welding.

    a. Miter corners, intersections, and directional changes in waterstops.
    b. Align center bulbs.

6. Clean waterstops immediately prior to placement of concrete.
7. Support and protect exposed waterstops during progress of the Work.

B. Self-Expanding Strip Waterstops: Install in construction joints and at other locations indicated on Drawings, according to manufacturer's written instructions, by adhesive bonding, mechanically fastening, and firmly pressing into place.

1. Install in longest lengths practicable.
2. Locate waterstops in center of joint unless otherwise indicated on Drawings.
3. Protect exposed waterstops during progress of the Work.

3.4 SHORING AND RESHORING INSTALLATION

A. Comply with ACI 318 and ACI 301 for design, installation, and removal of shoring and reshoring.

1. Do not remove shoring or reshoring until measurement of slab tolerances is complete.

B. In multistory construction, extend shoring or reshoring over a sufficient number of stories to distribute loads in such a manner that no floor or member will be excessively loaded or will induce tensile stress in concrete members without sufficient steel reinforcement.

C. Plan sequence of removal of shores and reshore to avoid damage to concrete. Locate and provide adequate reshoring to support construction without excessive stress or deflection.

3.5 FIELD QUALITY CONTROL

A. Special Inspections: Owner will engage a special inspector and qualified testing and inspecting agency to perform field tests and inspections and prepare test reports.

B. Inspections:

1. Inspect formwork for shape, location, and dimensions of the concrete member being formed.
2. Inspect insulating concrete forms for shape, location, and dimensions of the concrete member being formed.

END OF SECTION 031000

SECTION 032000 - CONCRETE REINFORCING

PART 1 - GENERAL

1.1 SUMMARY

A. Section Includes:

1. Steel reinforcement bars.
2. Welded-wire reinforcement.

1.2 ACTION SUBMITTALS

A. Product Data: For the following:

1. Each type of steel reinforcement.
2. Bar supports.

B. Shop Drawings: Comply with ACI SP-066:

1. Include placing drawings that detail fabrication, bending, and placement.
2. Include bar sizes, lengths, materials, grades, bar schedules, stirrup spacing, bent bar diagrams, bar arrangement, location of splices, lengths of lap splices, details of mechanical splice couplers, details of welding splices, tie spacing, hoop spacing, and supports for concrete reinforcement.

C. Construction Joint Layout: Indicate proposed construction joints required to build the structure.

1. Location of construction joints is subject to approval of Architect.

1.3 INFORMATIONAL SUBMITTALS

A. Material Certificates: For each of the following, signed by manufacturers:

1. Epoxy-Coated Reinforcement: CRSI's "Epoxy Coating Plant Certification."

B. Material Test Reports: For the following, from a qualified testing agency:

1. Steel Reinforcement:

a. For reinforcement to be welded, mill test analysis for chemical composition and carbon equivalent of the steel in accordance with ASTM A 706.

2. Mechanical splice couplers.

C. Field quality-control reports.

PART 2 - PRODUCTS

2.1 STEEL REINFORCEMENT

A. Reinforcing Bars: ASTM A 615, Grade 60, deformed.

B. Epoxy-Coated Reinforcing Bars:

1. Steel Bars: ASTM A 615, Grade 60, deformed bars.
2. Epoxy Coating: ASTM A 775 or ASTM A 934 with less than two percent (2%) damaged coating in each 12-inch bar length.

C. Deformed-Steel Welded-Wire Reinforcement: ASTM A 1064, flat sheet.

2.2 REINFORCEMENT ACCESSORIES

A. Bar Supports: Bolsters, chairs, spacers, and other devices for spacing, supporting, and fastening reinforcing bars and welded-wire reinforcement in place.

1. Manufacture bar supports from steel wire, plastic, or precast concrete in accordance with CRSI's "Manual of Standard Practice," of greater compressive strength than concrete and as follows:

a. For concrete surfaces exposed to view, where legs of wire bar supports contact forms, use CRSI Class 1 plastic-protected steel wire, all-plastic bar supports, or CRSI Class 2 stainless-steel bar supports.
b. For epoxy-coated reinforcement, use CRSI Class 1A epoxy-coated or other dielectric-polymer-coated wire bar supports.
c. For dual-coated reinforcement, use CRSI Class 1A epoxy-coated or other dielectric-polymer-coated wire bar supports.
d. For zinc-coated reinforcement, use galvanized wire or dielectric-polymer-coated wire bar supports.
e. For stainless-steel reinforcement, use CRSI Class 1 plastic-protected steel wire, all-plastic bar supports, or CRSI Class 2 stainless-steel bar supports.

B. Steel Tie Wire: ASTM A 1064, annealed steel, not less than 0.0508-inch in diameter.

1. Finish: Plain.

2.3 FABRICATING REINFORCEMENT

A. Fabricate steel reinforcement according to CRSI's "Manual of Standard Practice."

PART 3 - EXECUTION

3.1 PREPARATION

A. Protection of In-Place Conditions:

1. Do not cut or puncture vapor retarder.
2. Repair damage and reseal vapor retarder before placing concrete.

B. Clean reinforcement of loose rust and mill scale, earth, ice, and other foreign materials that reduce bond to concrete.

3.2 INSTALLATION OF STEEL REINFORCEMENT

A. Comply with CRSI's "Manual of Standard Practice" for placing and supporting reinforcement.

B. Accurately position, support, and secure reinforcement against displacement.

1. Locate and support reinforcement with bar supports to maintain minimum concrete cover.
2. Do not tack weld crossing reinforcing bars.

C. Preserve clearance between bars of not less than 1-inch, not less than one (1) bar diameter, or not less than 1-1/3 times size of large aggregate, whichever is greater.

D. Provide concrete coverage in accordance with ACI 318.

E. Set wire ties with ends directed into concrete, not toward exposed concrete surfaces.

F. Splices: Lap splices as indicated on Drawings.

1. Bars indicated to be continuous, and all vertical bars to be lapped not less than thirty-six (36) bar diameters at splices, or 24 inches, whichever is greater.
2. Stagger splices in accordance with ACI 318.
3. Mechanical Splice Couplers: Install in accordance with manufacturer's instructions.
4. Weld reinforcing bars in accordance with AWS D1.4, where indicated on Drawings.

G. Install welded-wire reinforcement in longest practicable lengths.

1. Support welded-wire reinforcement in accordance with CRSI "Manual of Standard Practice."

a. For reinforcement less than W4.0 or D4.0, continuous support spacing to not exceed 12 inches.

2. Lap edges and ends of adjoining sheets at least one (1) wire spacing plus 2 inches for plain wire and 8 inches for deformed wire.
3. Offset laps of adjoining sheet widths to prevent continuous laps in either direction.
4. Lace overlaps with wire.

3.3 JOINTS

A. Construction Joints: Install so strength and appearance of concrete are not impaired, at locations indicated or as approved by Architect.

1. Place joints perpendicular to main reinforcement.
2. Continue reinforcement across construction joints unless otherwise indicated.
3. Do not continue reinforcement through sides of strip placements of floors and slabs.

3.4 INSTALLATION TOLERANCES

A. Comply with ACI 117.

3.5 FIELD QUALITY CONTROL

A. Special Inspections: Owner will engage a special inspector and qualified testing and inspecting agency to perform field tests and inspections and prepare test reports.

B. Testing Agency: Engage a qualified testing and inspecting agency to perform tests and inspections and to submit reports.

C. Inspections:

1. Steel-reinforcement placement.

END OF SECTION 032000

SECTION 033000 - CAST-IN-PLACE CONCRETE

PART 1 - GENERAL

1.1 SUMMARY

A. Section Includes:

1. Cast-in-place concrete, including concrete materials, mixture design, placement procedures, and finishes.

B. Related Requirements:

1. Section 031000 "Concrete Forming and Accessories" for form-facing materials, form liners, insulating concrete forms, and waterstops.
2. Section 032000 "Concrete Reinforcing" for steel reinforcing bars and welded-wire reinforcement.
3. Division 31 for drainage fill under slabs-on-ground.

1.2 DEFINITIONS

A. Cementitious Materials: Portland cement alone or in combination with one (1) or more of the following: blended hydraulic cement, fly ash, slag cement, and other pozzolans materials subject to compliance with requirements.

B. Water/Cement Ratio (w/cm): The ratio by weight of water to cementitious materials.

1.3 PREINSTALLATION MEETINGS

A. Preinstallation Conference: Conduct conference at Project site.

1.4 ACTION SUBMITTALS

A. Product Data: For each of the following.

1. Portland cement.
2. Aggregates.
3. Admixtures:

   a. Include limitations of use, including restrictions on cementitious materials, supplementary cementitious materials, air entrainment, aggregates, temperature at time of concrete placement, relative humidity at time of concrete placement, curing conditions, and use of other admixtures.

4. Vapor retarders.
5. Liquid floor treatments.
6. Curing materials.
7. Joint fillers.
8. Porosity Inhibiting Admixture (PIA):

a. Product Data: Manufacturer's printed data.
b. Independent product test reports performed by a qualified testing agency evidencing compliance and/or certification with the US Army Corps of Engineers.
c. Sample copy of copyrighted "Life of the Concrete" warranty.
d. Sample copy of copyrighted Adhesion Guarantee.
e. Sample copy of copyrighted Moisture Letter.
f. HPD Health Product Declaration (Independently verified).
g. Safety Data Sheet. (SDS)
h. Provide copy of USA based insurance coverage to confirm warranty enforcement and legitimacy upon request.
i. National reference list of 2800+ standard "Life of the Concrete" warranted projects; all of which had ASTM 5084 testing and/or Army Corps of Engineers CRD C48-92 performed.

B. Design Mixtures: For each concrete mixture, include the following:

1. Mixture identification.
2. Minimum 28-day compressive strength.
3. Durability exposure class.
4. Maximum w/cm.
5. Calculated equilibrium unit weight, for lightweight concrete.
6. Slump limit.
7. Air content.
8. Nominal maximum aggregate size.
9. Indicate amounts of mixing water to be withheld for later addition at Project site if permitted.
10. Intended placement method.
11. Submit alternate design mixtures when characteristics of materials, Project conditions, weather, test results, or other circumstances warrant adjustments.

C. Shop Drawings:

1. Construction Joint Layout: Indicate proposed construction joints required to construct the structure.

a. Location of construction joints is subject to approval of the Architect.

D. Concrete Schedule: For each location of each Class of concrete indicated in "Concrete Mixtures" Article, including the following:

1. Concrete class designation.
2. Location within Project.
3. Exposure class designation.
4. Formed surface finish designation and final finish.
5. Final finish for floors.
6. Curing process.
7. Floor treatment if any.

1.5 INFORMATIONAL SUBMITTALS

A. Material Certificates: For each of the following, signed by manufacturers:

1. Cementitious materials.
2. Admixtures.
3. Curing compounds.
4. Vapor retarders.
5. Joint-filler strips.

B. Material Test Reports: For the following, from a qualified testing agency:

1. Portland cement.
2. Aggregates.
3. Admixtures:

C. Field quality-control reports.

1.6 QUALITY ASSURANCE

A. Ready-Mixed Concrete Manufacturer Qualifications: A firm experienced in manufacturing ready-mixed concrete products and that complies with ASTM C 94 requirements for production facilities and equipment.

1. Manufacturer certified in accordance with NRMCA's "Certification of Ready Mixed Concrete Production Facilities."

B. Porosity Inhibiting Admixture Manufacturer Qualifications: A manufacturer with not less than ten (10) years' experience in the actual manufacturing of concrete enhancement technology admixtures. Selected product manufacturer must have certification of compliance with ASTM C 494 testing protocols from an independent AASHTO/Corps of Engineers approved laboratory. A manufactured product is a stand-alone source or entity that manufacturers the porosity inhibiting admixture "PIA" and its components primarily in house. Manufacturer must have legitimate USA manufacturing presence to assure legitimate warranty enforcement. Manufacturer will provide an on-site, contracted independent ACI certified technical representative capable of randomly sampling each day's placement. One (1) random cylinder per day's concrete placement should be independently tested per ASTM 5084 and/or Army Corp of Engineers CRD C48-92 testing criteria.

1. Porosity Inhibiting Admixture ("PIA") Warranty Requirements:

a. "PIA" must be installed according to, and in compliance with, the manufacturer's published data sheet, including:

1) Dosing instructions.
2) Onsite independent representation and sampling requirements.
3) Use of an ASTM E 1745 vapor retarder installed following ASTM E 1643 and ACI 303.2R-06 and ASTM F 710 guidelines; elevated slabs to receive flooring do not require a vapor retarder.

4) Curing for all moisture sensitive products should be in compliance with ACI 308-16 “Guide to External Curing of Concrete” Section 4.1.4 “Moisture Sensitive Floors”

b. “PIA” Manufacturer's Standard Warranty shall include:

1) Term: Life of the concrete warranty.
2) Repair and/or removal of failed flooring.
3) Placement of a topical moisture remediation system.
4) Replacement of flooring materials like original installed to include material and labor.
5) Sodium silicate-free Concrete Enhancement Technology (CET) known as a Porosity Inhibiting Admixture “PIA”.

c. Manufacturer’s Adhesion Warranty shall include:

1) Warranty term to match that of the adhesive and/or primer manufacturer's material defect warranty.
2) Issued upon “PIA” manufacturer’s acceptance of field adhesive bond testing which followed flooring/adhesive manufacturer guidelines and requirements noted in ASTM F 710 for installation on a nonporous surface.

d. Moisture Letter: “PIA” Manufacturer shall provide a standard moisture letter indicating warrantability up to one hundred percent (100%) RH per qualified ASTM 2170 Insitu Probe testing and up 25lbs for ASTM 1869 CaCl testing.

1.7 DELIVERY, STORAGE, AND HANDLING

A. Comply with ASTM C 94 and ACI 301.

B. ‘PIA” Delivery, Storage, and Handling:

1. Deliver “PIA” in manufacturer’s original, undamaged containers.
2. Store “PIA” protected from exposure to harmful weather conditions and in a temperature-controlled area above 36 degrees.
3. Do not allow product to freeze. Should product freeze, immediately contact the “PIA” manufacturer for further instructions.

1.8 FIELD CONDITIONS

A. Cold-Weather Placement: Comply with ACI 301 and ACI 306.1.

B. Hot-Weather Placement: Comply with ACI 301 and ACI 305.1.

PART 2 - PRODUCTS

2.1 CONCRETE, GENERAL

A. ACI Publications: Comply with ACI 301 unless modified by requirements in the Contract Documents.

2.2 CONCRETE MATERIALS

A. Cementitious Materials:

1. Portland Cement: ASTM C 150, Type I, Type III.
2. Fly Ash: ASTM C 618, Class C or F.
3. Slag Cement: ASTM C 989, Grade 100 or 120.

B. Normal-Weight Aggregates: ASTM C 33, Class 3S coarse aggregate or better, graded. Provide aggregates from a single source.

1. Alkali-Silica Reaction: Comply with one (1) of the following:

a. Expansion Result of Aggregate: Not more than 0.04 percent at 1-year when tested in accordance with ASTM C 1293.
b. Expansion Results of Aggregate and Cementitious Materials in Combination: Not more than 0.10 percent at an age of sixteen (16) days when tested in accordance with ASTM C 1567.
c. Alkali Content in Concrete: Not more than 4 lb./cu. yd. for moderately reactive aggregate or 3 lb./cu. yd. for highly reactive aggregate, when tested in accordance with ASTM C 1293 and categorized in accordance with ASTM C 1778, based on alkali content being calculated in accordance with ACI 301.

2. Maximum Coarse-Aggregate Size: ¾-inch nominal.
3. Fine Aggregate: Free of materials with deleterious reactivity to alkali in cement.

C. Lightweight Aggregate: ASTM C 330, ¾-inch nominal maximum aggregate size.

D. Air-Entraining Admixture: ASTM C 260.

E. Chemical Admixtures: Certified by manufacturer to be compatible with other admixtures that do not contribute water-soluble chloride ions exceeding those permitted in hardened concrete. Do not use calcium chloride or admixtures containing calcium chloride in steel-reinforced concrete.

1. Water-Reducing Admixture: ASTM C 494, Type A.
2. Retarding Admixture: ASTM C 494, Type B.
3. Water-Reducing and -Retarding Admixture: ASTM C 494, Type D.
4. High-Range, Water-Reducing Admixture: ASTM C 494, Type F.
5. High-Range, Water-Reducing and -Retarding Admixture: ASTM C 494, Type G.
6. Plasticizing and Retarding Admixture: ASTM C 1017, Type II.
7. Porosity Inhibiting Admixture: ASTM C 494.

F. Water and Water Used to Make Ice: ASTM C 94, potable.

G. Porosity Inhibiting Admixture “PIA” for interior slabs (on ground and elevated) construction shall be a non-toxic, liquid admixture that is free of volatile organic compounds (VOC) and sodium silicates. This PIA shall create a natural chemical reaction forming a permanent barrier (capillary break) that is integral to the concrete, insoluble, and irremovable.

1. Hydraulic Conductivity: Project specific maximum of 6.0 E-8 cm/s per ASTM D 5084 as tested daily.

2. Toxicity: None.
3. Odor: None.
4. Flammability: None.
5. VOC Levels: Zero.
6. Solvent: Water.
7. Freeze Temp: 32 degrees Fahrenheit (0^0 C) (store above 36^0 F (2.3^0 C)).
8. Acid Resistance: Excellent.
9. Hazardous Vapors: None.
10. Installation: All concrete.
11. Capillary Break: Calcium silicate hydrate.
12. pH: 11.3.
13. Weight: 10.3 lbs./gallon (net).
14. Integral biocide to inhibit growth of mold and bacteria.
15. Reactive Silicates: Contains no sodium silicate.
16. "PIA" Basis-of-Design:

    a. Concrete Moisture Solutions; **Barrier One Admixture**
    b. Subject to compliance with the requirements of this section, under provisions of Sections 012500 "Substitutions Procedures" and 016000 "Product Requirements", substitutions may be considered if they are demonstrated to be equal through qualified independent testing and processes demonstrated and certified to be free of sodium silicate. Failure to provide a product that meets or exceeds the "PIA's" minimum warranty requirements of Part 1 and the "PIA" field quality control requirements of Part 3 will result in all subsequent testing and slab remediation costs being borne by the Ready-Mix supplier, Concrete Contractor, and General Contractor. Sodium Silicate MVRAs are not to be considered as equal to the newest concrete enhancement technologies known as porosity inhibiting admixtures or "PIA". The responsibility and issuance of warranties for such a substitution will be borne by the project field parties submitting such a substitution.

2.3 VAPOR RETARDERS

A. Sheet Vapor Retarder: ASTM E 1745, Class A; not less than 10 mils thick. Include manufacturer's recommended adhesive or pressure-sensitive tape.

1. Manufacturers: Subject to compliance with requirements, provide products by the following:

    a. Stego Industries, LLC

2.4 LIQUID FLOOR TREATMENTS

A. Penetrating Liquid Floor Treatment: Clear, chemically reactive, waterborne solution of inorganic silicate or siliconate materials and proprietary components; odorless; that penetrates, hardens, and densifies concrete surfaces.

1. Manufacturers: Subject to compliance with requirements, provide products by one (1) of the following:

    a. Dayton Superior
    b. Euclid Chemical Company (The); an RPM company

c. W.R. Meadows, Inc.

2.5 CURING MATERIALS

A. Moisture-Retaining Cover: ASTM C 171, polyethylene film burlap-polyethylene sheet.

1. Color:

a. Ambient Temperature Below 50 deg F: Black.
b. Ambient Temperature between 50 deg F and 85 deg F: Any color.
c. Ambient Temperature Above 85 deg F: White.

B. Water: Potable or complying with ASTM C 1602.

2.6 RELATED MATERIALS

A. Expansion- and Isolation-Joint-Filler Strips: ASTM D 1751, asphalt-saturated cellulosic fiber or ASTM D 1752, cork or self-expanding cork.

B. Floor Slab Protective Covering: 8-feet-wide cellulose fabric.

1. Manufacturers: Subject to compliance with requirements, provide products by the following:

a. McTech Group, Inc.

2.7 CONCRETE MIXTURES, GENERAL

A. Prepare design mixtures for each type and strength of concrete, proportioned on the basis of laboratory trial mixture or field test data, or both, in accordance with ACI 301.

1. Use a qualified testing agency for preparing and reporting proposed mixture designs, based on laboratory trial mixtures.

B. Cementitious Materials: Limit percentage, by weight, of cementitious materials other than Portland cement in concrete as follows:

1. Fly Ash or Other Pozzolans: Twenty-five percent (25%) by mass.
2. Total of Fly Ash or Other Pozzolans, Slag Cement: Fifty percent (50%) by mass, with fly ash or pozzolans not exceeding twenty-five percent (25%) by mass.
3. Total of Fly Ash or Other Pozzolans: Thirty-five percent (35%) by mass with fly ash or pozzolans not exceeding twenty-five percent (25%) by mass.

C. Admixtures: Use admixtures in accordance with manufacturer's written instructions.

1. Use water-reducing high-range water-reducing or plasticizing admixture in concrete, as required, for placement and workability.
2. Use water-reducing and -retarding admixture when required by high temperatures, low humidity, or other adverse placement conditions.
3. Use water-reducing admixture in pumped concrete, and concrete with a w/cm below 0.50.

2.8 CONCRETE MIXTURES

A. Class A: Normal-weight concrete used for footings, grade beams, and tie beams.

1. Exposure Class: ACI 318 F2.
2. Minimum Compressive Strength: As indicated on Drawings at twenty-eight (28) days.
3. Maximum w/cm: 0.45.
4. Slump Limit: 5 inches, plus or minus 1-inch.
5. Slump Flow Limit: For self-consolidating concrete based on ASTM C 1611, as permitted under ACI 301.
6. Air Content:

    a. Six percent (6%), plus or minus one and one-half percent (1½%) at point of delivery for concrete containing ¾ -inch nominal maximum aggregate size.

7. Limit water-soluble, chloride-ion content in hardened concrete to 0.15 percent by weight of cement.

B. Class B: Normal-weight concrete used for foundation walls.

1. Exposure Class: ACI 318 F2.
2. Minimum Compressive Strength: As indicated on Drawings at twenty-eight (28) days.
3. Maximum w/cm: 0.45.
4. Slump Limit: 5 inches, plus or minus 1-inch.
5. Slump Flow Limit: For self-consolidating concrete based on ASTM C 1611, as permitted under ACI 301.
6. Air Content:

    a. Six percent (6%), plus or minus one and one-half percent (1½%) at point of delivery for concrete containing ¾-inch nominal maximum aggregate size.

7. Limit water-soluble, chloride-ion content in hardened concrete to 0.15 percent by weight of cement.

C. Class C: Normal-weight concrete used for interior slabs-on-ground.

1. Exposure Class: ACI 318 F0.
2. Minimum Compressive Strength: As indicated on Drawings at twenty-eight (28) days.
3. Maximum w/cm: 0.55.
4. Minimum Cementitious Materials Content: 540 lb./cu. yd.
5. Slump Limit: 5 inches, plus or minus 1-inch.
6. Slump Flow Limit: For self-consolidating concrete based on ASTM C 1611, as permitted under ACI 301.
7. Air Content:

    a. Do not use an air-entraining admixture or allow total air content to exceed three percent (3%) for concrete used in trowel-finished floors.

8. Limit water-soluble, chloride-ion content in hardened concrete to 0.15 percent by weight of cement.

D. Class F: Normal-weight concrete used for concrete toppings.

1. Exposure Class: ACI 318 F0.
2. Minimum Compressive Strength: 4000 psi at twenty-eight (28) days.
3. Minimum Cementitious Materials Content: 540 lb./cu. yd.
4. Slump Limit: 4 inches, plus or minus 1-inch.
5. Air Content:

   a. Zero percent (0%), plus or minus one and one-half percent (1½%) at point of delivery for concrete containing ¾-inch nominal maximum aggregate size.

6. Limit water-soluble, chloride-ion content in hardened concrete to 0.15 percent by weight of cement.

   a. Do not use an air-entraining admixture or allow total air content to exceed three percent (3%) for concrete used in trowel-finished toppings.

E. Class J: Normal-weight concrete used for exterior retaining walls.

1. Exposure Class: ACI 318 F2.
2. Minimum Compressive Strength: As indicated on Drawings at twenty-eight (28) days.
3. Maximum w/cm: 0.45.
4. Slump Limit: 5 inches, plus or minus 1-inch.
5. Slump Flow Limit: For self-consolidating concrete based on ASTM C 1611, as permitted under ACI 301.
6. Air Content:

   a. Exposure Classes F2: Six percent (6%), plus or minus one and one-half percent (1½%) at point of delivery for concrete containing ¾-inch nominal maximum aggregate size.

7. Limit water-soluble, chloride-ion content in hardened concrete to 0.15 percent by weight of cement.

2.9 CONCRETE MIXING

A. Ready-Mixed Concrete: Measure, batch, mix, and deliver concrete in accordance with ASTM C 94, and furnish batch ticket information.

B. Project-Site Mixing: Measure, batch, and mix concrete materials and concrete in accordance with ASTM C 94. Mix concrete materials in appropriate drum-type batch machine mixer.

1. For mixer capacity of 1 cu. yd. or smaller, continue mixing at least 1½ minutes, but not more than 5 minutes after ingredients are in mixer, before any part of batch is released.
2. For mixer capacity larger than 1 cu. yd., increase mixing time by 15 seconds for each additional 1 cu. yd.
3. Provide batch ticket for each batch discharged and used in the Work, indicating Project identification name and number, date, mixture type, mixture time, quantity, and amount of water added. Record approximate location of final deposit in structure.

PART 3 - EXECUTION

3.1 INSTALLATION OF EMBEDDED ITEMS

A. Place and secure anchorage devices and other embedded items required for adjoining Work that is attached to or supported by cast-in-place concrete.

1. Use setting drawings, templates, diagrams, instructions, and directions furnished with items to be embedded.
2. Install anchor rods, accurately located, to elevations required and complying with tolerances in Section 7.5 of ANSI/AISC 303.
3. Install reglets to receive waterproofing and to receive through-wall flashings in outer face of concrete frame at exterior walls, where flashing is shown at lintels, shelf angles, and other conditions.

3.2 INSTALLATION OF VAPOR RETARDER

A. Sheet Vapor Retarders: Place, protect, and repair sheet vapor retarder in accordance with ASTM E 1643 and manufacturer's written instructions.

1. Install vapor retarder with longest dimension parallel with direction of concrete pour.
2. Face laps away from exposed direction of concrete pour.
3. Lap vapor retarder over footings and grade beams not less than 6 inches, sealing vapor retarder to concrete.
4. Lap joints 6 inches and seal with manufacturer's recommended tape.
5. Terminate vapor retarder at the top of floor slabs, grade beams, and pile caps, sealing entire perimeter to floor slabs, grade beams, foundation walls, or pile caps.
6. Seal penetrations in accordance with vapor retarder manufacturer's instructions.
7. Protect vapor retarder during placement of reinforcement and concrete.

    a. Repair damaged areas by patching with vapor retarder material, overlapping damages area by 6 inches on all sides, and sealing to vapor retarder.

3.3 JOINTS

A. Construct joints true to line, with faces perpendicular to surface plane of concrete.

B. Construction Joints: Coordinate with floor slab pattern and concrete placement sequence.

1. Install so strength and appearance of concrete are not impaired, at locations indicated on Drawings or as approved by Architect.
2. Place joints perpendicular to main reinforcement.

    a. Continue reinforcement across construction joints unless otherwise indicated.
    b. Do not continue reinforcement through sides of strip placements of floors and slabs.

3. Form keyed joints as indicated. Embed keys at least 1½ inches into concrete.
4. Locate joints for beams, slabs, joists, and girders at third points of spans. Offset joints in girders a minimum distance of twice the beam width from a beam-girder intersection.
5. Locate horizontal joints in walls and columns at underside of floors, slabs, beams, and girders and at the top of footings or floor slabs.

6. Space vertical joints in walls as indicated on Drawings. Unless otherwise indicated on Drawings, locate vertical joints beside piers integral with walls, near corners, and in concealed locations where possible.

C. Control Joints in Slabs-on-Ground: Form weakened-plane control joints, sectioning concrete into areas as indicated. Construct control joints for a depth equal to at least one-fourth of concrete thickness as follows:

1. Grooved Joints: Form control joints after initial floating by grooving and finishing each edge of joint to a radius of 1/8-inch. Repeat grooving of control joints after applying surface finishes. Eliminate groover tool marks on concrete surfaces.
2. Sawed Joints: Form control joints with power saws equipped with shatterproof abrasive or diamond-rimmed blades. Cut 1/8-inch-wide joints into concrete when cutting action does not tear, abrade, or otherwise damage surface and before concrete develops random cracks.

D. Isolation Joints in Slabs-on-Ground: After removing formwork, install joint-filler strips at slab junctions with vertical surfaces, such as column pedestals, foundation walls, grade beams, and other locations, as indicated.

1. Extend joint-filler strips full width and depth of joint, terminating flush with finished concrete surface unless otherwise indicated on Drawings.
2. Terminate full-width joint-filler strips not less than ½-inch or more than 1-inch below finished concrete surface, where joint sealants, specified in Section 079200 "Joint Sealants," are indicated.
3. Install joint-filler strips in lengths as long as practicable. Where more than one (1) length is required, lace or clip sections together.

E. Doweled Joints:

1. Install dowel bars and support assemblies at joints where indicated on Drawings.
2. Lubricate or asphalt coat ½ of dowel bar length to prevent concrete bonding to one (1) side of joint.

3.4 CONCRETE PLACEMENT

A. Before placing concrete, verify that installation of formwork, reinforcement, embedded items, and vapor retarder is complete and that required inspections are completed.

1. Immediately prior to concrete placement, inspect vapor retarder for damage and deficient installation, and repair defective areas.
2. Provide continuous inspection of vapor retarder during concrete placement and make necessary repairs to damaged areas as Work progresses.

B. Notify Architect and testing and inspection agencies 24 hours prior to commencement of concrete placement.

C. Do not add water to concrete during delivery, at Project site, or during placement unless approved by Architect in writing, but not to exceed the amount indicated on the concrete delivery ticket.

1. Do not add water to concrete after adding high-range water-reducing admixtures to mixture.

D. Before test sampling and placing concrete, water may be added at Project site, subject to limitations of ACI 301, but not to exceed the amount indicated on the concrete delivery ticket.

1. Do not add water to concrete after adding high-range water-reducing admixtures to mixture.

E. Deposit concrete continuously in one layer or in horizontal layers of such thickness that no new concrete is placed on concrete that has hardened enough to cause seams or planes of weakness.

1. If a section cannot be placed continuously, provide construction joints as indicated.
2. Deposit concrete to avoid segregation.
3. Deposit concrete in horizontal layers of depth not to exceed formwork design pressures and in a manner to avoid inclined construction joints.
4. Consolidate placed concrete with mechanical vibrating equipment in accordance with ACI 301.

a. Do not use vibrators to transport concrete inside forms.
b. Insert and withdraw vibrators vertically at uniformly spaced locations to rapidly penetrate placed layer and at least 6 inches into preceding layer.
c. Do not insert vibrators into lower layers of concrete that have begun to lose plasticity.
d. At each insertion, limit duration of vibration to time necessary to consolidate concrete, and complete embedment of reinforcement and other embedded items without causing mixture constituents to segregate.

F. Deposit and consolidate concrete for floors and slabs in a continuous operation, within limits of construction joints, until placement of a panel or section is complete.

1. Do not place concrete floors and slabs in a checkerboard sequence.
2. Consolidate concrete during placement operations, so concrete is thoroughly worked around reinforcement and other embedded items and into corners.
3. Maintain reinforcement in position on chairs during concrete placement.
4. Screed slab surfaces with a straightedge and strike off to correct elevations.
5. Level concrete, cut high areas, and fill low areas.
6. Slope surfaces uniformly to drains where required.
7. Begin initial floating using bull floats or darbies to form a uniform and open-textured surface plane, before excess bleedwater appears on the surface.
8. Do not further disturb slab surfaces before starting finishing operations.

G. Installation of Porosity Inhibiting Admixture (PIA) Dosed Concrete:

1. Add “PIA” in accordance with manufacturer’s printed data sheet instructions: For mix designs ranging from 0.31 to 0.52 w/cm, dosages at 14 ounces per 100 pounds of total cementitious materials. Remove an equal amount of water from the mix. Add separately from other admixtures at the tail end of the load. Mix designs below 0.31 and above 0.52 may require adjustment and consultation with “PIA” manufacturer and is required prior to their use.

a. Ready-Mixed Concrete: Measure, batch, mix, and deliver concrete with “PIA” according to ASTM C 94; furnish batch ticket information showing dosage of “PIA”.

b. Project-Site Mixing: Measure, batch, and mix concrete materials and concrete according to ASTM C 94. Add the "PIA" to where it makes direct contact with the ready-mix material and then rotate drum of batch truck on high for at least 7 minutes prior to discharge.

2. Freshening onsite with held back mix water is acceptable so long as the practice is in accordance with published ACI guidelines and does not exceed the original water to cementitious material ratio or instructions of the Structural Engineer and those reviewed by the "PIA" manufacturer.
3. Use of water reducing admixtures is recommended to achieve slumps greater than 4 inches.
4. Use of other admixtures in the same batch as "PIA" is acceptable so long as each admixture is added separately.
5. The inclusion of a shrink reducing admixture (SRA) is not acceptable.
6. The addition of a crystalline growth admixture is not acceptable.
7. In Cold-Weather Placement: Comply with ACI 306.1.
8. In Hot-Weather Placement: Comply with ACI 305.

3.5 FINISHING FORMED SURFACES

A. As-Cast Surface Finishes:

1. ACI 301 Surface Finish SF-1.0: As-cast concrete texture imparted by form-facing material.

   a. Patch voids larger than 1½ inches wide or ½-inch-deep.
   b. Remove projections larger than 1-inch.
   c. Tie holes do not require patching.
   d. Surface Tolerance: ACI 117 Class D.
   e. Apply to concrete surfaces not exposed to public view.

2. ACI 301 Surface Finish SF-2.0: As-cast concrete texture imparted by form-facing material, arranged in an orderly and symmetrical manner with a minimum of seams.

   a. Patch voids larger than ¾-inch-wide or ½-inch-deep.
   b. Remove projections larger than ¼-inch.
   c. Patch tie holes.
   d. Surface Tolerance: ACI 117 Class B.
   e. Locations: Apply to concrete surfaces exposed to public view, to receive a rubbed finish, or to be covered with a coating or covering material applied directly to concrete.

3. ACI 301 Surface Finish SF-3.0:

   a. Patch voids larger than ¾-inch-wide or ½-inch-deep.
   b. Remove projections larger than 1/8-inch.
   c. Patch tie holes.
   d. Surface Tolerance: ACI 117 Class A.
   e. Locations: Apply to concrete surfaces as indicated on Drawings.

B. Related Unformed Surfaces:

1. At tops of walls, horizontal offsets, and similar unformed surfaces adjacent to formed surfaces, strike off smooth and finish with a color and texture matching adjacent formed surfaces.
2. Continue final surface treatment of formed surfaces uniformly across adjacent unformed surfaces unless otherwise indicated.

3.6 FINISHING FLOORS AND SLABS

A. Comply with ACI 302.1R recommendations for screeding, restraightening, and finishing operations for concrete surfaces. Do not wet concrete surfaces.

B. Scratch Finish:

1. While still plastic, texture concrete surface that has been screeded and bull-floated or darbied.
2. Use stiff brushes, brooms, or rakes to produce a profile depth of ¼-inch in one (1) direction.
3. Apply scratch finish to surfaces to receive concrete floor toppings to receive mortar setting beds for bonded cementitious floor finishes.

C. Float Finish:

1. When bleedwater sheen has disappeared and concrete surface has stiffened sufficiently to permit operation of specific float apparatus, consolidate concrete surface with power-driven floats or by hand floating if area is small or inaccessible to power-driven floats.
2. Repeat float passes and restraightening until surface is left with a uniform, smooth, granular texture and complies with ACI 117 tolerances for conventional concrete.
3. Apply float finish to surfaces to receive trowel finish and to be covered with fluid-applied or sheet waterproofing, built-up or membrane roofing, or sand-bed terrazzo.

D. Trowel Finish:

1. After applying float finish, apply first troweling and consolidate concrete by hand or power-driven trowel.
2. Continue troweling passes and restraighten until surface is free of trowel marks and uniform in texture and appearance.
3. Grind smooth any surface defects that would telegraph through applied coatings or floor coverings.
4. Do not add water to concrete surface.
5. Do not apply hard-troweled finish to concrete, which has a total air content greater than three percent (3%).
6. Apply a trowel finish to surfaces exposed to view or to be covered with resilient flooring, carpet, ceramic or quarry tile set over a cleavage membrane, paint, or another thin-film-finish coating system.
7. Finish and measure surface, so gap at any point between concrete surface and an unleveled, freestanding, 10-ft.-long straightedge resting on two (2) high spots and placed anywhere on the surface does not exceed 3/16-inch.

E. Trowel and Fine-Broom Finish: Apply a first trowel finish to surfaces indicated on Drawings where ceramic or quarry tile is to be installed by either thickset or thinset method. While concrete is still plastic, slightly scarify surface with a fine broom perpendicular to main traffic route.

1. Coordinate required final finish with Architect before application.
2. Comply with flatness and levelness tolerances for trowel-finished floor surfaces.

F. Broom Finish: Apply a broom finish to exterior concrete platforms, steps, ramps, and locations indicated on Drawings.

1. Immediately after float finishing, slightly roughen trafficked surface by brooming with fiber-bristle broom perpendicular to main traffic route.
2. Coordinate required final finish with Architect before application.

3.7 INSTALLATION OF MISCELLANEOUS CONCRETE ITEMS

A. Filling In:

1. Fill in holes and openings left in concrete structures after Work of other trades is in place unless otherwise indicated.
2. Mix, place, and cure concrete, as specified, to blend with in-place construction.
3. Provide other miscellaneous concrete filling indicated or required to complete the Work.

B. Curbs: Provide monolithic finish to interior curbs by stripping forms while concrete is still green and by steel-troweling surfaces to a hard, dense finish with corners, intersections, and terminations slightly rounded.

C. Equipment Bases and Foundations:

1. Coordinate sizes and locations of concrete bases with actual equipment provided.
2. Construct concrete bases 8 inches high unless otherwise indicated on Drawings, and extend base not less than 6 inches in each direction beyond the maximum dimensions of supported equipment unless otherwise indicated on Drawings, or unless required for seismic anchor support.
3. Minimum Compressive Strength: 4500 psi at twenty-eight (28) days.
4. Install dowel rods to connect concrete base to concrete floor. Unless otherwise indicated, install dowel rods on 18-inch centers around the full perimeter of concrete base.
5. For supported equipment, install epoxy-coated anchor bolts that extend through concrete base and anchor into structural concrete substrate.
6. Prior to pouring concrete, place and secure anchorage devices.

    a. Use setting drawings, templates, diagrams, instructions, and directions furnished with items to be embedded.
    b. Cast anchor-bolt insert into bases.
    c. Install anchor bolts to elevations required for proper attachment to supported equipment.

3.8 CONCRETE CURING

A. Protect freshly placed concrete from premature drying and excessive cold or hot temperatures.

1. Comply with ACI 301 and ACI 306.1 for cold weather protection during curing.
2. Comply with ACI 301 and ACI 305.1 for hot-weather protection during curing.
3. Maintain moisture loss no more than 0.2 lb./sq. ft. x h, calculated in accordance with ACI 305.1, before and during finishing operations.

B. Curing Formed Surfaces: Comply with ACI 308.1 as follows:

1. Cure formed concrete surfaces, including underside of beams, supported slabs, and other similar surfaces.
2. Cure concrete containing color pigments in accordance with color pigment manufacturer's instructions.
3. If forms remain during curing period, moist cure after loosening forms.
4. If removing forms before end of curing period, continue curing for remainder of curing period, as follows:

    a. Continuous Fogging: Maintain standing water on concrete surface until final setting of concrete.
    b. Continuous Sprinkling: Maintain concrete surface continuously wet.
    c. Water-Retention Sheeting Materials: Cover exposed concrete surfaces with sheeting material, taping, or lapping seams.
    d. Membrane-Forming Curing Compound: Apply uniformly in continuous operation by power spray or roller in accordance with manufacturer's written instructions.

        1) Recoat areas subject to heavy rainfall within 3 hours after initial application.
        2) Maintain continuity of coating and repair damage during curing period.

C. Curing Unformed Surfaces: Comply with ACI 308.1 as follows:

1. Begin curing immediately after finishing concrete.
2. Interior Concrete Floors:

    a. Floors to Receive Floor Coverings Specified in Other Sections: Contractor has option of the following:

        1) Moisture-Retaining-Cover Curing: Cover concrete surfaces with moisture-retaining cover for curing concrete, placed in widest practicable width, with sides and ends lapped at least 12 inches, and sealed by waterproof tape or adhesive.

            a) Immediately repair any holes or tears during curing period, using cover material and waterproof tape.
            b) Cure for not less than seven (7) days.

        2) Ponding or Continuous Sprinkling of Water: Maintain concrete surfaces continuously wet for not less than seven (7) days, utilizing one (1), or a combination of, the following:

            a) Water.
            b) Continuous water-fog spray.

    b. Floors to Receive Penetrating Liquid Floor Treatments: Contractor has option of the following:

        1) Moisture-Retaining-Cover Curing: Cover concrete surfaces with moisture-retaining cover for curing concrete, placed in widest practicable width, with

sides and ends lapped at least 12 inches, and sealed by waterproof tape or adhesive.

a) Immediately repair any holes or tears during curing period, using cover material and waterproof tape.
b) Cure for not less than seven (7) days.

2) Ponding or Continuous Sprinkling of Water: Maintain concrete surfaces continuously wet for not less than seven (7) days, utilizing one (1), or a combination of, the following:

a) Water.
b) Continuous water-fog spray.

c. Floors to Receive Polished Finish:

1) Ponding or Continuous Sprinkling of Water: Maintain concrete surfaces continuously wet for not less than seven (7) days, utilizing one (1), or a combination of, the following:

a) Water.
b) Continuous water-fog spray.

d. Floors to Receive Curing Compound:

1) Apply uniformly in continuous operation by power spray or roller in accordance with manufacturer's written instructions.
2) Recoat areas subjected to heavy rainfall within 3 hours after initial application.
3) Maintain continuity of coating, and repair damage during curing period.
4) Removal: After curing period has elapsed, remove curing compound without damaging concrete surfaces by method recommended by curing compound manufacturer unless manufacturer certifies curing compound does not interfere with bonding of floor covering used on Project.

e. Floors to Receive Curing and Sealing Compound:

1) Apply uniformly to floors and slabs indicated in a continuous operation by power spray or roller in accordance with manufacturer's written instructions.
2) Recoat areas subjected to heavy rainfall within 3 hours after initial application.
3) Repeat process 24 hours later, and apply a second coat. Maintain continuity of coating, and repair damage during curing period.

3.9 TOLERANCES

A. Conform to ACI 117.

3.10 APPLICATION OF LIQUID FLOOR TREATMENTS

A. Penetrating Liquid Floor Treatment: Prepare, apply, and finish penetrating liquid floor treatment in accordance with manufacturer's written instructions.

1. Remove curing compounds, sealers, oil, dirt, laitance, and other contaminants and complete surface repairs.
2. Do not apply to concrete that is less than seven (7) days' old.
3. Apply liquid until surface is saturated, scrubbing into surface until a gel forms; rewet; and repeat brooming or scrubbing.
4. Rinse with water; remove excess material until surface is dry.
5. Apply a second coat in a similar manner if surface is rough or porous.

B. Sealing Coat: Uniformly apply a continuous sealing coat of curing and sealing compound to hardened concrete by power spray or roller in accordance with manufacturer's written instructions.

3.11 FIELD QUALITY CONTROL

A. Special Inspections: Owner will engage a special inspector to perform field tests and inspections and prepare testing and inspection reports.

B. Testing Agency: A qualified testing and inspecting agency to perform tests and inspections and to submit reports.

1. Testing agency to be responsible for providing curing container for composite samples on Site and verifying that field-cured composite samples are cured in accordance with ASTM C 31.
2. Testing agency to immediately report to Architect, Contractor, and concrete manufacturer any failure of Work to comply with Contract Documents.
3. Testing agency shall report results of tests and inspections, in writing, to Owner, Architect, Contractor, and concrete manufacturer within 48 hours of inspections and tests.

    a. Test reports to include reporting requirements of ASTM C 31, ASTM C 39, and ACI 301, including the following as applicable to each test and inspection:

        1) Project name.
        2) Name of testing agency.
        3) Names and certification numbers of field and laboratory technicians performing inspections and testing.
        4) Name of concrete manufacturer.
        5) Date and time of inspection, sampling, and field testing.
        6) Date and time of concrete placement.
        7) Location in Work of concrete represented by samples.
        8) Date and time sample was obtained.
        9) Truck and batch ticket numbers.
        10) Design compressive strength at twenty-eight (28) days.
        11) Concrete mixture designation, proportions, and materials.
        12) Field test results.

13) Information on storage and curing of samples before testing, including curing method and maximum and minimum temperatures during initial curing period.
14) Type of fracture and compressive break strengths at seven (7) days and twenty-eight (28) days.

C. Batch Tickets: For each load delivered, submit three copies of batch delivery ticket to testing agency, indicating quantity, mix identification, admixtures, design strength, aggregate size, design air content, design slump at time of batching, and amount of water that can be added at Project site.

D. Inspections:

1. Headed bolts and studs.
2. Verification of use of required design mixture.
3. Concrete placement, including conveying and depositing.
4. Curing procedures and maintenance of curing temperature.
5. Verification of concrete strength before removal of shores and forms from beams and slabs.
6. Batch Plant Inspections: On a random basis, as determined by Architect.

E. Concrete Tests: Testing of composite samples of fresh concrete obtained in accordance with ASTM C 172shall be performed in accordance with the following requirements:

1. Testing Frequency: Obtain one (1) composite sample for each day's pour of each concrete mixture exceeding 5 cu. yd., but less than 25 cu. yd., plus one (1) set for each additional 50 cu. yd. or fraction thereof.

   a. When frequency of testing provides fewer than five (5) compressive-strength tests for each concrete mixture, testing to be conducted from at least five (5) randomly selected batches or from each batch if fewer than five (5) are used.

2. Slump: ASTM C 143:

   a. One (1) test at point of placement for each composite sample, but not less than one (1) test for each day's pour of each concrete mixture.
   b. Perform additional tests when concrete consistency appears to change.

3. Slump Flow: ASTM C 1611:

   a. One (1) test at point of placement for each composite sample, but not less than one (1) test for each day's pour of each concrete mixture.
   b. Perform additional tests when concrete consistency appears to change.

4. Air Content: ASTM C 231 pressure method, for normal-weight concrete; ASTM C 173 volumetric method, for structural lightweight concrete.

   a. One (1) test for each composite sample, but not less than one (1) test for each day's pour of each concrete mixture.

5. Concrete Temperature: ASTM C 1064:

a. One (1) test hourly when air temperature is 40 deg F and below or 80 deg F and above, and one (1) test for each composite sample.

6. Unit Weight: ASTM C 567 fresh unit weight of structural lightweight concrete.

   a. One (1) test for each composite sample, but not less than one (1) test for each day's pour of each concrete mixture.

7. Compression Test Specimens: ASTM C 31:

   a. Cast and laboratory cure two (2) sets of three (3) 6-inch by 12-inch or 4-inch by 8-inch cylinder specimens for each composite sample.
   b. Cast, initial cure, and field cure two (2) sets of three standard cylinder specimens for each composite sample.

8. Compressive-Strength Tests: ASTM C 39.

   a. Test one (1) set of three (3) laboratory-cured specimens at seven (7) days and one (1) set of two (2) specimens at twenty-eight (28) days.
   b. Test one (1) set of three (3) field-cured specimens at seven (7) days and one (1) set of two (2) specimens at twenty-eight (28) days.
   c. A compressive-strength test to be the average compressive strength from a set of two (2) specimens obtained from same composite sample and tested at age indicated.

9. When strength of field-cured cylinders is less than eighty-five percent (85%) of companion laboratory-cured cylinders, Contractor to evaluate operations and provide corrective procedures for protecting and curing in-place concrete.
10. Strength of each concrete mixture will be satisfactory if every average of any three (3) consecutive compressive-strength tests equals or exceeds specified compressive strength, and no compressive-strength test value falls below specified compressive strength by more than 500 psi if specified compressive strength is 5000 psi, or no compressive strength test value is less than ten percent (10%) of specified compressive strength if specified compressive strength is greater than 5000 psi.
11. Nondestructive Testing: Impact hammer, sonoscope, or other nondestructive device may be permitted by Architect but will not be used as sole basis for approval or rejection of concrete.
12. Additional Tests:

    a. Testing and inspecting agency to make additional tests of concrete when test results indicate that slump, air entrainment, compressive strengths, or other requirements have not been met, as directed by Architect.
    b. Testing and inspecting agency may conduct tests to determine adequacy of concrete by cored cylinders complying with ASTM C 42 or by other methods as directed by Architect.

       1) Acceptance criteria for concrete strength to be in accordance with ACI 301, Section 1.6.6.3.

13. Additional testing and inspecting, at Contractor's expense, will be performed to determine compliance of replaced or additional work with specified requirements.

14. Correct deficiencies in the Work that test reports and inspections indicate do not comply with the Contract Documents.

F. Measure floor and slab flatness and levelness in accordance with ASTM E 1155 within 48 hours of completion of floor finishing and promptly report test results to Architect.

G. Testing of Slabs Containing "PIA": The manufacturer of the "PIA" will, at their expense, contract with a qualified independent agency to obtain project specific sample cylinders and independent certified laboratories for subsequent testing per ASTM D 5084 and/or Army Corp of Engineers CRD C48-92 and preparation of test reports per each daily concrete placement.

1. The "PIA" manufacturer will perform all daily concrete placement internal moisture ASTM 5084 and/or Army Corp of Engineers CRD C48-92 testing in accordance with this specification and will issue project specific standard literature "Life of the Concrete" warranties and adhesion guarantees prior to installation of any slab finishes when requested; no further field slab moisture nor pH testing shall be required.
2. A contracted independent and certified agency of the "PIA" manufacturer's choice must be present at the jobsite during placement of all "PIA" treated concrete.
3. Do not proceed without this contracted, qualified representative being present.
4. A minimum of one (1) business day notification is required.
5. Field testing technician shall procure at least one (1) 4- x 8-inch cylinder from a random project placement of "PIA" dosed concrete for subsequent hydraulic conductivity/coefficient of permeability testing.
6. All cylinders shall be independently lab tested in accordance with ASTM D 5084 and/or Army Corp of Engineers CRD C48-92.
7. Test results must conform to specified limits.
8. Should any cylinder from any day of placement deliver results more than 6.0 E-08 cm/sec, the PIA manufacturer shall procure, at their expense, a core (or cores) from that day's placement. This core (cores) shall be sent to an independent laboratory for hydraulic conductivity testing (coefficient or permeability) per ASTM D 5084 and/or Army Corp of Engineers CRD C48-92.
9. Should any core deliver results more than 6.0 E-08 cm/sec per ASTM D 5084, the concrete porosity inhibiting admixture manufacturer shall provide, at their expense, a topical moisture mitigation system for the tested areas not meeting the stated limit provided dosing and field process protocol was followed.
10. Proceeding with any concrete placement dosed with the "PIA" and without the required representation will result in the contractor bearing the cost to core and ship appropriate material for testing per ASTM D 5084 and/or Army Corp of Engineers CRD C48-92 and the possible subsequent remediation expenses.

3.12 PROTECTION

A. Protect concrete surfaces as follows:

1. Protect from petroleum stains.
2. Diaper hydraulic equipment used over concrete surfaces.
3. Prohibit vehicles from interior concrete slabs.
4. Prohibit use of pipe-cutting machinery over concrete surfaces.
5. Prohibit placement of steel items on concrete surfaces.
6. Prohibit use of acids or acidic detergents over concrete surfaces.

7. Protect liquid floor treatment from damage and wear during the remainder of construction period. Use protective methods and materials, including temporary covering, recommended in writing by liquid floor treatments installer.
8. Protect concrete surfaces scheduled to receive surface hardener or polished concrete finish using floor slab protective covering.

END OF SECTION 033000

SECTION 042613 - MASONRY VENEER

PART 1 - GENERAL

1.1 RELATED DOCUMENTS

A. Drawings and general provisions of the Contract, including General and Supplementary Conditions and Division 01 Specification Sections, apply to this Section.

1.2 SUMMARY

A. Section Includes:

1. Clay face brick.
2. Mortar materials.
3. Ties and anchors.
4. Embedded flashing.
5. Accessories.
6. Mortar mixes.

B. Related Requirements:

1. Section 076200 "Sheet Metal Flashing and Trim" for exposed sheet metal flashing and for furnishing manufactured reglets installed in masonry joints.

1.3 PREINSTALLATION MEETINGS

A. Preinstallation Conference: Conduct conference at Project site.

1.4 ACTION SUBMITTALS

A. Product Data: For each type of product.

B. Shop Drawings: For the following:

1. Masonry Units: Indicate sizes, profiles, coursing, and locations of special shapes.
2. Fabricated Flashing: Detail corner units, end-dam units, and other special applications.

C. Samples: For each type and color of the following:

1. Clay face brick, in the form of straps of five (5) or more bricks.
2. Special brick shapes.
3. Pigmented mortar. Make Samples using same sand and mortar ingredients to be used on Project.
4. Weep/cavity vents.
5. Cavity drainage material.
6. Accessories embedded in masonry.

1.5 INFORMATIONAL SUBMITTALS

A. Material Certificates: For each type and size of the following:

1. Masonry units.

   a. Include material test reports substantiating compliance with requirements.
   b. For brick, include size-variation data verifying that actual range of sizes falls within specified tolerances.
   c. For exposed brick, include test report for efflorescence according to ASTM C 67.

2. Cementitious materials. Include brand name, type, and name of manufacturer.
3. Mortar admixtures.
4. Preblended, dry mortar mixes. Include description of type and proportions of ingredients.
5. Anchors, ties, and metal accessories.

B. Mix Designs: For each type of mortar. Include description of type and proportions of ingredients.

1. Include test reports for mortar mixes required to comply with property specification. Test in accordance with ASTM C 109 for compressive strength, ASTM C 1506 for water retention, and ASTM C 91 for air content.

C. Cold-Weather and Hot-Weather Procedures: Detailed description of methods, materials, and equipment to be used to comply with requirements.

1.6 MOCKUPS

A. Wall Mockups: Build mockups to verify selections made under Sample submittals, to demonstrate aesthetic effects, and to set quality standards for materials and execution.

1. Build mockup for typical exterior wall area as shown on Drawings.

   a. Include a sealant-filled joint at least 16 inches long in mockup.
   b. Include lower corner of window opening at upper corner of exterior wall mockup. Make opening approximately 12 inches wide by 16 inches high.
   c. Include through-wall flashing installed for a 24-inch length in corner of exterior wall mockup approximately 16 inches down from top of mockup, with a 12-inch length of flashing left exposed to view (omit masonry above half of flashing).
   d. Include metal studs, sheathing, air barrier, veneer anchors, flashing, cavity drainage material, and weep holes in exterior masonry-veneer wall mockup.
   e. Include connection to and fiber cement siding above.

2. Protect accepted mockups from the elements with weather-resistant membrane.
3. Approval of mockups does not constitute approval of deviations from the Contract Documents contained in mockups unless Architect specifically approves such deviations in writing.
4. Subject to compliance with requirements, approved mockups may become part of the completed Work if undisturbed at time of Substantial Completion.

1.7 DELIVERY, STORAGE, AND HANDLING

A. Store masonry units on elevated platforms in a dry location. If units are not stored in an enclosed location, cover tops and sides of stacks with waterproof sheeting, securely tied. If units become wet, do not install until they are dry.

B. Store cementitious materials on elevated platforms, under cover, and in a dry location. Do not use cementitious materials that have become damp.

C. Store aggregates where grading and other required characteristics can be maintained and contamination avoided.

D. Deliver preblended, dry mortar mix in moisture-resistant containers. Store preblended, dry mortar mix in delivery containers on elevated platforms in a dry location or in covered weatherproof dispensing silos.

E. Store masonry accessories, including metal items, to prevent corrosion and accumulation of dirt and oil.

1.8 FIELD CONDITIONS

A. Protection of Masonry: During construction, cover tops of walls, projections, and sills with waterproof sheeting at end of each day's work. Cover partially completed masonry when construction is not in progress.

1. Extend cover a minimum of 24 inches down face of veneer, and hold cover securely in place.

B. Stain Prevention: Prevent grout, mortar, and soil from staining the face of masonry. Immediately remove grout, mortar, and soil that come in contact with such masonry.

1. Protect base of walls from rain-splashed mud and from mortar splatter by spreading coverings on ground and over wall surface.
2. Protect sills, ledges, and projections from mortar droppings.
3. Protect surfaces of window and door frames, as well as similar products with painted and integral finishes, from mortar droppings.
4. Turn scaffold boards near the wall on edge at the end of each day to prevent rain from splashing mortar and dirt onto completed masonry.

C. Cold-Weather Requirements: Do not use frozen materials or materials mixed or coated with ice or frost. Do not build on frozen substrates. Remove and replace unit masonry damaged by frost or by freezing conditions. Comply with cold-weather construction requirements contained in TMS 602.

1. Cold-Weather Cleaning: Use liquid cleaning methods only when air temperature is 40 deg F (4 deg C) and higher and will remain so until masonry has dried, but not less than seven (7) days after completing cleaning.

D. Hot-Weather Requirements: Comply with hot-weather construction requirements contained in TMS 602.

PART 2 - PRODUCTS

2.1 SOURCE LIMITATIONS

A. Obtain exposed masonry units of a uniform texture and color, or a uniform blend within the ranges accepted for these characteristics, from single source from single manufacturer for each product required.

B. Obtain mortar ingredients of a uniform quality, including color for exposed masonry, from single manufacturer for each cementitious component and from single source or producer for each aggregate.

2.2 UNIT MASONRY, GENERAL

A. Masonry Standard: Comply with TMS 602, except as modified by requirements in the Contract Documents.

B. Defective Units: Referenced masonry unit standards may allow a certain percentage of units to contain chips, cracks, or other defects exceeding limits stated. Do not use units where such defects will be exposed in the completed Work.

2.3 BRICK

A. General: Provide shapes indicated and as follows, with exposed surfaces matching finish and color of exposed faces of adjacent units:

1. For ends of sills and caps and for similar applications that would otherwise expose unfinished brick surfaces, provide units without cores or frogs and with exposed surfaces finished.
2. Provide special shapes for applications where stretcher units cannot accommodate special conditions, including corners, movement joints, bond beams, sashes, and lintels.
3. Provide special shapes for applications requiring brick of size, form, color, and texture on exposed surfaces that cannot be produced by sawing.
4. Provide special shapes for applications where shapes produced by sawing would result in sawed surfaces being exposed to view.

B. Clay Face Brick: Facing brick complying with ASTM C 216.

1. Basis-of-Design:

a. Pine Hall Brick Company; **Spektra**

2. Products: Subject to compliance with requirements, available products that may be incorporated into the Work include, but are not limited to, the following:

a. The Belden Brick Company, distributed by The Homer C. Godfrey Company
b. Watsontown Brick
c. Mack Brick Company
d. Substitutions: Under provisions of Section 012500 “Substitution Procedures”.

3. Grade: SW.

4. Type: FBS.
5. Initial Rate of Absorption: Less than 30 g/30 sq. in. per minute when tested in accordance with ASTM C 67.
6. Efflorescence: Provide brick that has been tested in accordance with ASTM C 67 and is rated "not effloresced."
7. Size (Actual Dimensions): 3-5/8 inches wide by 2¼ inches high by 7-5/8 inches long.
8. Application: Use where brick is exposed unless otherwise indicated.
9. Color and Texture: Red and dark mingled blended veneer as selected by Architect and Owner from manufacturer's full range, wire cut.

2.4 MORTAR MATERIALS

A. Portland Cement: ASTM C 150, Type I or II, except Type III may be used for cold-weather construction. Provide natural color or white cement as required to produce mortar color indicated.

1. Alkali content shall not be more than 0.1 percent when tested in accordance with ASTM C 114.

B. Hydrated Lime: ASTM C 207, Type S.

C. Mortar Pigments: Natural and synthetic iron oxides and chromium oxides, compounded for use in mortar mixes and complying with ASTM C 979. Use only pigments with a record of satisfactory performance in masonry mortar.

1. Products: Subject to compliance with requirements, available products that may be incorporated into the Work include, but are not limited to, the following:

a. Davis Colors; **True Tone Mortar Colors**
b. Lanxess Corporation; **Bayferrox Iron Oxide Pigments**
c. Solomon Colors, Inc.; **SGS Mortar Colors**
d. Substitutions: Under provisions of Section 012500 "Substitution Procedures".

D. Colored Cement Product: Packaged blend made from Portland cement and hydrated lime and mortar pigments, all complying with specified requirements, and containing no other ingredients.

1. Colored Portland Cement-Lime Mix:

a. Products: Subject to compliance with requirements, available products that may be incorporated into the Work include, but are not limited to, the following:

1) Capital Materials Corporation; **Riverton Portland Cement Lime Custom Color**
2) Holcim (US) Inc.; **Rainbow Mortamix Custom Color Cement/Lime**
3) Lafarge North America Inc.; **Eaglebond Portland & Lime**
4) Lehigh Cement Company; **Lehigh Custom Color Portland/Lime Cement**
5) Substitutions: Under provisions of Section 012500 "Substitution Procedures".

2. Formulate blend as required to produce color indicated or, if not indicated, as selected from manufacturer's entire range of colors.
3. Pigments do not exceed ten percent (10%) of Portland cement by weight.

E. Aggregate for Mortar: ASTM C 144.

1. For mortar that is exposed to view, use washed aggregate consisting of natural sand or crushed stone.
2. For joints less than ¼-inch-thick, use aggregate graded with one hundred percent (100%) passing the No. 16 sieve.
3. White-Mortar Aggregates: Natural white sand or crushed white stone.

F. Water: Potable.

2.5 TIES AND ANCHORS

A. General: Ties and anchors shall extend at least 1½ inches into veneer but with at least a 5/8-inch cover on outside face.

B. Materials: Provide ties and anchors specified in this article that are made from materials that comply with the following unless otherwise indicated.

1. Stainless-Steel Wire: ASTM A 580, Type 304.
2. Stainless-Steel Sheet: ASTM A 240 or ASTM A 666, Type 304.

C. Adjustable Masonry-Veneer Anchors:

1. General: Provide anchors that allow vertical adjustment but resist a 100-lbf load in both tension and compression perpendicular to plane of wall without deforming or developing play in excess of 1/16-inch.
2. Fabricate sheet metal anchor sections and other sheet metal parts from 0.109-inch-thick, stainless-steel sheet.
3. Fabricate wire ties from 0.187-inch-diameter, stainless-steel wire unless otherwise indicated.
4. Fabricate wire connector sections from 0.187-inch-diameter, stainless-steel wire.
5. Screw-Attached, Masonry-Veneer Anchors: Wire tie and a rib-stiffened, sheet metal anchor section with screw holes top and bottom, with projecting tabs having holes for inserting vertical legs of wire tie formed to fit anchor section.
6. Seismic Masonry-Veneer Anchors: Wire tie and a rib-stiffened, sheet metal anchor section with screw holes top and bottom, with projecting tabs having holes for inserting vertical legs of wire tie formed to fit anchor section. Wire tie has sheet metal clip welded to it with integral tabs designed to engage continuous wire.

2.6 EMBEDDED FLASHING MATERIALS

A. Metal Flashing: Provide metal flashing complying with Section 076200 "Sheet Metal Flashing and Trim".

B. Flexible Flashing: Use the following unless otherwise indicated:

1. Copper Fabric Flashing: 5-oz./sq. ft. copper sheet bonded between two (2) layers of glass-fiber cloth. Use only where flashing is fully concealed in masonry.

    a. Basis of Design:

        1) York Manufacturing, Inc.; **Multi-Flash 500**

    b. Products: Subject to compliance with requirements, available products that may be incorporated into the Work include, but are not limited to, the following:

        1) Advanced Building Products Inc.
        2) Sandell Manufacturing Co., Inc.
        3) Substitutions: Under provisions of Section 012500 “Substitution Procedures”.

C. Application: Unless otherwise indicated, use the following:

1. Where flashing is indicated to receive counterflashing, use metal flashing.
2. Where flashing is indicated to be turned down at or beyond the wall face, use metal flashing.
3. Where flashing is partly exposed and is indicated to terminate at the wall face, use metal flashing or flexible flashing with a metal drip edge.
4. Where flashing is fully concealed, use flexible flashing.

D. Solder and Sealants for Sheet Metal Flashings: As specified in Section 076200 "Sheet Metal Flashing and Trim."

E. Adhesives, Primers, and Seam Tapes for Flashings: Flashing manufacturer's standard products or products recommended by flashing manufacturer for bonding flashing sheets to each other and to substrates.

2.7 MISCELLANEOUS ANCHORS

A. Anchor Bolts: Headed or L-shaped steel bolts complying with ASTM A 307, Grade A; with ASTM A 563 hex nuts and, where indicated, flat washers; hot-dip galvanized to comply with ASTM A 153, Class C; of dimensions indicated.

2.8 ACCESSORIES

A. Weep/Vent Products: Use the following unless otherwise indicated:

1. Cellular Plastic Weep/Vent: One-piece, flexible extrusion made from UV-resistant polypropylene copolymer, full height and width of head joint and depth 1/8-inch less than depth of outer wythe, in color selected by Architect and Owner from manufacturer's full range.

    a. Products: Subject to compliance with requirements, available products that may be incorporated into the Work include, but are not limited to, the following:

        1) Advanced Building Products Inc.; **Mortar Maze weep vent**
        2) Heckmann Building Products Inc.; **No. 85 Cell Vent**

3) Hohmann & Barnard, Inc.; **Quadro-Vent**
4) Substitutions: Under provisions of Section 012500 "Substitution Procedures".

B. Cavity Drainage Material: Free-draining mesh, made from polymer strands that will not degrade within the wall cavity.

1. Basis of Design:

a. Mortar Net USA, Ltd.; **Mortar Net**

2. Products: Subject to compliance with requirements, available products that may be incorporated into the Work include, but are not limited to, the following:

a. Advanced Building Products Inc.
b. Archovations, Inc.
c. Substitutions: Under provisions of Section 012500 "Substitution Procedures".

3. Configuration: Provide one (1) of the following configurations:

a. Strips, full-depth of cavity and 10 inches high, with dovetail shaped notches 7 inches deep that prevent clogging with mortar droppings.
b. Strips, not less than 1½ inches thick and 10 inches high, with dimpled surface designed to catch mortar droppings and prevent weep holes from clogging with mortar.

2.9 MASONRY CLEANERS

A. Proprietary Acidic Masonry Cleaner: Manufacturer's standard-strength cleaner designed for removing mortar/grout stains, efflorescence, and other new construction stains from new masonry without discoloring or damaging masonry surfaces. Use product expressly approved for intended use by cleaner manufacturer and manufacturer of masonry units being cleaned.

1. Manufacturers: Subject to compliance with requirements, available manufacturers offering products that may be incorporated into the Work include, but are not limited to, the following:

a. Diedrich Technologies, Inc.
b. EaCo Chem, Inc.
c. ProSoCo, Inc.
d. Substitutions: Under provisions of Section 012500 "Substitution Procedures".

2.10 MORTAR MIXES

A. General: Do not use admixtures, including pigments, air-entraining agents, accelerators, retarders, water-repellent agents, antifreeze compounds, or other admixtures, unless otherwise indicated.

1. Do not use calcium chloride in mortar.
2. Use Portland cement-lime mortar unless otherwise indicated.

B. Preblended, Dry Mortar Mix: Furnish dry mortar ingredients in form of a preblended mix. Measure quantities by weight to ensure accurate proportions, and thoroughly blend ingredients before delivering to Project site.

C. Mortar for Unit Masonry: Comply with ASTM C 270, Property Specification. Use Type N unless another type is indicated.

1. For masonry below grade or in contact with earth, use Type S.

D. Pigmented Mortar: Use colored cement product.

1. Application: Use pigmented mortar for exposed mortar joints.

PART 3 - EXECUTION

3.1 EXAMINATION

A. Examine conditions, with Installer present, for compliance with requirements for installation tolerances and other conditions affecting performance of the Work.

1. For the record, prepare written report, endorsed by Installer, listing conditions detrimental to performance of work.

B. Proceed with installation only after unsatisfactory conditions have been corrected.

3.2 INSTALLATION, GENERAL

A. Leave openings for equipment to be installed before completing masonry. After installing equipment, complete masonry to match the construction immediately adjacent to opening.

B. Use full-size units without cutting if possible. If cutting is required to provide a continuous pattern or to fit adjoining construction, cut units with motor-driven saws; provide clean, sharp, unchipped edges. Allow units to dry before laying unless wetting of units is specified. Install cut units with cut surfaces and, where possible, cut edges concealed.

C. Select and arrange units for exposed unit masonry to produce a uniform blend of colors and textures. Mix units from several pallets or cubes as they are placed.

3.3 TOLERANCES

A. Dimensions and Locations of Elements:

1. For dimensions in cross section or elevation do not vary by more than plus ½-inch or minus ¼-inch.
2. For location of elements in plan do not vary from that indicated by more than plus or minus ½-inch.
3. For location of elements in elevation do not vary from that indicated by more than plus or minus ¼-inch in a story height or ½-inch total.

B. Lines and Levels:

1. For bed joints and top surfaces of bearing walls do not vary from level by more than ¼-inch in 10 feet, or ½-inch maximum.
2. For conspicuous horizontal lines, such as lintels, sills, parapets, and reveals, do not vary from level by more than 1/8-inch in 10 feet, ¼-inch in 20 feet, or ½-inch maximum.
3. For vertical lines and surfaces do not vary from plumb by more than ¼-inch in 10 feet, 3/8-inch in 20 feet, or ½-inch maximum.
4. For conspicuous vertical lines, such as external corners, door jambs, reveals, and expansion and control joints, do not vary from plumb by more than 1/8-inch in 10 feet, ¼-inch in 20 feet, or ½-inch maximum.
5. For lines and surfaces do not vary from straight by more than ¼-inch in 10 feet, 3/8-inch in 20 feet, or ½-inch maximum.
6. For vertical alignment of exposed head joints, do not vary from plumb by more than ¼-inch in 10 feet, or ½-inch maximum.
7. For faces of adjacent exposed masonry units, do not vary from flush alignment by more than 1/16-inch except due to warpage of masonry units within tolerances specified for warpage of units.

C. Joints:

1. For bed joints, do not vary from thickness indicated by more than plus or minus 1/8-inch, with a maximum thickness limited to ½-inch.
2. For exposed bed joints, do not vary from bed-joint thickness of adjacent courses by more than 1/8-inch.
3. For head and collar joints, do not vary from thickness indicated by more than plus 3/8-inch or minus ¼-inch.
4. For exposed head joints, do not vary from thickness indicated by more than plus or minus 1/8-inch. Do not vary from adjacent bed-joint and head-joint thicknesses by more than 1/8-inch.
5. For exposed bed joints and head joints of stacked bond, do not vary from a straight line by more than 1/16-inch from one (1) masonry unit to the next.

3.4 LAYING MASONRY WALLS

A. Lay out walls in advance for accurate spacing of surface bond patterns with uniform joint thicknesses and for accurate location of openings, movement-type joints, returns, and offsets. Avoid using less-than-half-size units, particularly at corners, jambs, and, where possible, at other locations.

B. Bond Pattern for Exposed Masonry: Unless otherwise indicated, lay exposed masonry in running bond; do not use units with less than nominal 4-inch horizontal face dimensions at corners or jambs.

C. Stopping and Resuming Work: Stop work by racking back units in each course from those in course below; do not tooth. When resuming work, clean masonry surfaces that are to receive mortar, remove loose masonry units and mortar, and wet brick if required before laying fresh masonry.

D. Built-in Work: As construction progresses, build in items specified in this and other Sections. Fill in solidly with masonry around built-in items.

3.5 MORTAR BEDDING AND JOINTING

A. Lay hollow brick with face shells fully bedded in mortar and with head joints of depth equal to bed joints. At starting course, fully bed entire units, including area under cells.

1. At anchors and ties, fully bed units and fill cells with mortar as needed to fully embed anchors and ties in mortar.

B. Tool exposed joints slightly concave when thumbprint hard, using a jointer larger than joint thickness unless otherwise indicated.

3.6 ANCHORED MASONRY VENEERS

A. Anchor masonry veneers to wall framing with masonry-veneer anchors to comply with the following requirements:

1. Fasten screw-attached and seismic anchors through sheathing to wall framing with metal fasteners of type indicated. Use two (2) fasteners unless anchor design only uses one (1) fastener.
2. Embed tie sections in masonry joints.
3. Locate anchor sections to allow maximum vertical differential movement of ties up and down.
4. Space anchors as indicated, but not more than 18 inches o.c. vertically and 24 inches o.c. horizontally, with not less than one (1) anchor for each 2 sq. ft. of wall area. Install additional anchors within 12 inches of openings and at intervals, not exceeding 8 inches, around perimeter.

B. Provide not less than 2 inches of airspace between back of masonry veneer and face of sheathing.

1. Keep airspace clean of mortar droppings and other materials during construction. Bevel beds away from airspace, to minimize mortar protrusions into airspace. Do not attempt to trowel or remove mortar fins protruding into airspace.

3.7 EXPANSION JOINTS

A. General: Install expansion joint materials in unit masonry as masonry progresses. Do not allow materials to span expansion joints without provision to allow for in-plane wall or partition movement.

B. Form expansion joints in brick as follows:

1. Build flanges of factory-fabricated, expansion-joint units into masonry.
2. Build in compressible joint fillers where indicated.
3. Form open joint full depth of brick wythe and of width indicated, but not less than 3/8 inch for installation of sealant and backer rod specified in Section 079200 "Joint Sealants."

3.8 FLASHING, WEEP HOLES, VENTS, AND CAVITY DRAINAGE

A. General: Install embedded flashing and weep holes/vents in masonry at shelf angles, lintels, ledges, other obstructions to downward flow of water in wall, and where indicated.

B. Install flashing as follows unless otherwise indicated:

1. Prepare masonry surfaces so they are smooth and free from projections that could puncture flashing. Where flashing is within mortar joint, place through-wall flashing on sloping bed of mortar and cover with mortar. Before covering with mortar, seal penetrations in flashing with adhesive, sealant, or tape as recommended by flashing manufacturer.
2. Extend flashing through veneer, across airspace behind veneer, and up face of sheathing at least 8 inches; with upper edge tucked under air barrier, lapping at least 4 inches. Fasten upper edge of flexible flashing to sheathing through termination bar.
3. Install metal drip edges beneath flexible flashing at exterior face of wall. Stop flexible flashing ½-inch back from outside face of wall, and adhere flexible flashing to top of metal drip edge.

C. Install reglets and nailers for flashing and other related construction where they are indicated to be built into masonry.

D. Install weep vents in veneers in head joints of first course of masonry immediately above embedded flashing and where indicated in Drawings.

1. Use specified products to form weep holes/vents.
2. Space weep holes/vents 24 inches o.c. unless otherwise indicated.

E. Place cavity drainage material in airspace behind veneers to comply with configuration requirements for cavity drainage material in "Miscellaneous Masonry Accessories" Article.

3.9 FIELD QUALITY CONTROL

A. Testing Agency: Owner will engage a qualified testing agency to perform tests and inspections. Allow inspectors access to scaffolding and work areas as needed to perform tests and inspections. Retesting of materials that fail to comply with specified requirements will be at Contractor's expense.

B. Inspections: Special inspections according to Level B in TMS 402/ACI 530/ASCE 5.

1. Begin masonry construction only after inspectors have verified proportions of site-prepared mortar.

C. Testing Prior to Construction: One (1) set of tests.

D. Clay Masonry Unit Test: For each type of unit provided, according to ASTM C 67 for compressive strength.

E. Mortar Test (Property Specification): For each mix provided, according to ASTM C 780. Test mortar for mortar air content and compressive strength.

3.10 REPAIRING, POINTING, AND CLEANING

A. Remove and replace masonry units that are loose, chipped, broken, stained, or otherwise damaged or that do not match adjoining units. Install new units to match adjoining units; install in fresh mortar, pointed to eliminate evidence of replacement.

B. Pointing: During the tooling of joints, enlarge voids and holes, except weep vents, and completely fill with mortar. Point up joints, including corners, openings, and adjacent construction, to provide a neat, uniform appearance. Prepare joints for sealant application, where indicated.

C. In-Progress Cleaning: Clean unit masonry as work progresses by dry brushing to remove mortar fins and smears before tooling joints.

D. Final Cleaning: After mortar is thoroughly set and cured, clean exposed masonry as follows:

1. Remove large mortar particles by hand with wooden paddles and nonmetallic scrape hoes or chisels.
2. Test cleaning methods on sample wall panel; leave one-half of panel uncleaned for comparison purposes. Obtain Architect's approval of sample cleaning before proceeding with cleaning of masonry.
3. Protect adjacent stone and non-masonry surfaces from contact with cleaner by covering them with liquid strippable masking agent or polyethylene film and waterproof masking tape.
4. Wet wall surfaces with water before applying cleaners; remove cleaners promptly by rinsing surfaces thoroughly with clear water.
5. Clean masonry with a proprietary acidic cleaner applied according to manufacturer's written instructions.

3.11 MASONRY WASTE DISPOSAL

A. Salvageable Materials: Unless otherwise indicated, excess masonry materials are Contractor's property. At completion of unit masonry work, remove from Project site.

B. Excess Masonry Waste: Remove excess clean masonry waste that cannot be used as fill, as described above or recycled, and other masonry waste, and legally dispose of off Owner's property.

END OF SECTION 042000

SECTION 051200 - STRUCTURAL STEEL FRAMING

PART 1 - GENERAL

1.1 SUMMARY

A. Section Includes:

1. Structural steel.
2. Shear stud connectors, shop welded.
3. Shrinkage-resistant grout.

1.2 DEFINITIONS

A. Structural Steel: Elements of the structural frame indicated on Drawings and as described in ANSI/AISC 303.

1.3 PREINSTALLATION MEETINGS

A. Preinstallation Conference: Conduct conference at Project site.

1.4 ACTION SUBMITTALS

A. Product Data:

1. Structural-steel materials.
2. High-strength, bolt-nut-washer assemblies.
3. Shear stud connectors.
4. Anchor rods.
5. Threaded rods.
6. Shop primer.
7. Galvanized-steel primer.
8. Etching cleaner.
9. Galvanized repair paint.
10. Shrinkage-resistant grout.

B. Shop Drawings: Show fabrication of structural-steel components.

C. Delegated Design Submittal: For structural-steel connections indicated on Drawings to comply with design loads, include analysis data signed and sealed by the qualified professional engineer responsible for their preparation.

1.5 INFORMATIONAL SUBMITTALS

A. Welding certificates.

B. Field quality-control reports.

1.6 QUALITY ASSURANCE

A. Fabricator Qualifications: A qualified fabricator that participates in the AISC Quality Certification Program and is designated an AISC-Certified Plant, Category BU or is accredited by the IAS Fabricator Inspection Program for Structural Steel (Acceptance Criteria 172).

B. Installer Qualifications: A qualified Installer who participates in the AISC Quality Certification Program and is designated an AISC-Certified Erector, Category ACSE.

C. Welding Qualifications: Qualify procedures and personnel in accordance with AWS D1.1.

PART 2 - PRODUCTS

2.1 PERFORMANCE REQUIREMENTS

A. Comply with applicable provisions of the following specifications and documents:

1. ANSI/AISC 303.
2. ANSI/AISC 360.
3. RCSC's "Specification for Structural Joints Using High-Strength Bolts."

B. Connection Design Information:

1. Option 1: Connection designs have been completed and connections indicated on the Drawings.
2. Option 2: Fabricator's experienced steel detailer shall select or complete connections in accordance with ANSI/AISC 303.

   a. Select and complete connections using schematic details indicated and ANSI/AISC 360.
   b. Use Allowable Stress Design; data are given at service-load level.

3. Option 3 and 3A: Design connections in accordance with ANSI/AISC 303 by fabricator's qualified professional engineer. Member reinforcement at connections is indicated on Drawings.

   a. Use Allowable Stress Design; data are given at service-load level.

4. Option 3 and 3B: Design connections and final configuration of member reinforcement at connections in accordance with ANSI/AISC 303 by fabricator's qualified professional engineer.

   a. Use Allowable Stress Design; data are given at service-load level.

C. Moment Connections: Type FR, fully restrained.

2.2 STRUCTURAL-STEEL MATERIALS

A. W-Shapes: ASTM A 992.

B. Channels, Angles: ASTM A 572, Grade 50.

C. Plate and Bar: ASTM A 36.

D. Cold-Formed Hollow Structural Sections: ASTM A 500, Grade C structural tubing.

E. Steel Pipe: ASTM A 53, Type E or Type S, Grade B.

F. Welding Electrodes: Comply with AWS requirements.

2.3 BOLTS AND CONNECTORS

A. High-Strength A325 Bolts, Nuts, and Washers: ASTM F 3125, Grade A325, Type 1, heavy-hex steel structural bolts; ASTM A 563, Grade DH, heavy-hex carbon-steel nuts; and ASTM F 436, Type 1, hardened carbon-steel washers; all with plain finish.

1. Direct-Tension Indicators: ASTM F 959, Type 325-1, compressible-washer type with plain finish.

B. Zinc-Coated High-Strength A325 Bolts, Nuts, and Washers: ASTM F 3125, Grade A325, Type 1, heavy-hex steel structural bolts; ASTM A 563, Grade DH, heavy-hex carbon-steel nuts; and ASTM F 436, Type 1, hardened carbon-steel washers.

1. Finish: Hot-dip zinc coating.
2. Direct-Tension Indicators: ASTM F 959, Type 325-1, compressible-washer type with mechanically deposited zinc coating finish.

C. Shear Stud Connectors: ASTM A 108, AISI C-1015 through C-1020, headed-stud type, cold-finished carbon steel; AWS D1.1, Type B.

2.4 RODS

A. Unheaded Anchor Rods: ASTM F 1554, Grade 36.

1. Configuration: Hooked.
2. Finish: Hot-dip zinc coating, ASTM A 153, Class C.

B. Headed Anchor Rods: ASTM F 1554, Grade 36, straight.

1. Finish: Hot-dip zinc coating, ASTM A 153, Class C.

C. Threaded Rods: ASTM A 36.

1. Finish: Plain Hot-dip zinc coating, ASTM A 153, Class C.

2.5 PRIMER

A. Steel Primer:

1. Comply with Sections 099113 "Exterior Painting" and 099123 "Interior Painting."
2. Fabricator's standard lead- and chromate-free, non-asphaltic, rust-inhibiting primer complying with MPI#79 and compatible with topcoat.

B. Galvanized-Steel Primer: MPI#26, MPI#80, or MPI#134.

1. Etching Cleaner: MPI#25, for galvanized steel.
2. Galvanizing Repair Paint: MPI#18, MPI#19, or SSPC-Paint 20 ASTM A 780.

2.6 SHRINKAGE-RESISTANT GROUT

A. Nonmetallic, Shrinkage-Resistant Grout: ASTM C 1107, factory-packaged, nonmetallic aggregate grout, noncorrosive and non-staining, mixed with water to consistency suitable for application and a 30-minute working time.

2.7 FABRICATION

A. Structural Steel: Fabricate and assemble in shop to greatest extent possible. Fabricate in accordance with ANSI/AISC 303 and to ANSI/AISC 360.

B. Shear Stud Connectors: Prepare steel surfaces as recommended by manufacturer of shear connectors. Weld using automatic end welding of headed-stud shear connectors in accordance with AWS D1.1 and manufacturer's written instructions.

2.8 SHOP CONNECTIONS

A. High-Strength Bolts: Shop install high-strength bolts in accordance with RCSC's "Specification for Structural Joints Using High-Strength Bolts" for type of bolt and type of joint specified.

1. Joint Type: Pretensioned.

B. Weld Connections: Comply with AWS D1.1 for tolerances, appearances, welding procedure specifications, weld quality, and methods used in correcting welding work.

2.9 GALVANIZING

A. Hot-Dip Galvanized Finish: Apply zinc coating by the hot-dip process to structural steel in accordance with ASTM A 123.

1. Fill vent and drain holes that are exposed in the finished Work unless they function as weep holes, by plugging with zinc solder and filing off smooth.

2.10 SHOP PRIMING

A. Shop prime steel surfaces, except the following:

1. Surfaces embedded in concrete or mortar. Extend priming of partially embedded members to a depth of 2 inches.
2. Surfaces to be field welded.
3. Surfaces to receive sprayed fire-resistive materials (applied fireproofing).
4. Galvanized surfaces unless indicated to be painted.

B. Surface Preparation of Steel: Clean surfaces to be painted. Remove loose rust and mill scale and spatter, slag, or flux deposits. Prepare surfaces in accordance with the following specifications and standards:

1. SSPC-SP 3.

C. Surface Preparation of Galvanized Steel: Prepare galvanized-steel surfaces for shop priming by thoroughly cleaning steel of grease, dirt, oil, flux, and other foreign matter, and treating with etching cleaner or in accordance with SSPC-SP 16.

D. Priming: Immediately after surface preparation, apply primer in accordance with manufacturer's written instructions and at rate recommended by SSPC to provide a minimum dry film thickness of 1.5 mils. Use priming methods that result in full coverage of joints, corners, edges, and exposed surfaces.

PART 3 - EXECUTION

3.1 EXAMINATION

A. Verify, with certified steel erector present, elevations of concrete- and masonry-bearing surfaces and locations of anchor rods, bearing plates, and other embedments for compliance with requirements.

B. Proceed with installation only after unsatisfactory conditions have been corrected.

3.2 ERECTION

A. Set structural steel accurately in locations and to elevations indicated and in accordance with ANSI/AISC 303 and ANSI/AISC 360.

B. Baseplates Bearing Plates and Leveling Plates: Clean concrete- and masonry-bearing surfaces of bond-reducing materials, and roughen surfaces prior to setting plates. Clean bottom surface of plates.

1. Set plates for structural members on wedges, shims, or setting nuts as required.
2. Weld plate washers to top of baseplate.
3. Pretension anchor rods after supported members have been positioned and plumbed. Do not remove wedges or shims but, if protruding, cut off flush with edge of plate before packing with grout.
4. Promptly pack shrinkage-resistant grout solidly between bearing surfaces and plates, so no voids remain. Neatly finish exposed surfaces; protect grout and allow to cure. Comply with manufacturer's written installation instructions for grouting.

C. Maintain erection tolerances of structural steel within ANSI/AISC 303.

3.3 FIELD CONNECTIONS

A. High-Strength Bolts: Install high-strength bolts in accordance with RCSC's "Specification for Structural Joints Using High-Strength Bolts" for bolt and joint type specified.

1. Joint Type: Pretensioned.

B. Weld Connections: Comply with AWS D1.1 for tolerances, appearances, welding procedure specifications, weld quality, and methods used in correcting welding work.

1. Comply with ANSI/AISC 303 and ANSI/AISC 360 for bearing, alignment, adequacy of temporary connections, and removal of paint on surfaces adjacent to field welds.

3.4 FIELD QUALITY CONTROL

A. Special Inspections: Owner will engage a special inspector to perform the following special inspections:

1. Verify structural-steel materials and inspect steel frame joint details.
2. Verify weld materials and inspect welds.
3. Verify connection materials and inspect high-strength bolted connections.

B. Testing Agency: Owner will engage a qualified testing agency to perform tests and inspections.

1. Bolted Connections: Inspect bolted connections in accordance with RCSC's "Specification for Structural Joints Using High-Strength Bolts."
2. Welded Connections: Visually inspect field welds in accordance with AWS D1.1.

a. In addition to visual inspection, test and inspect field welds in accordance with AWS D1.1and the following inspection procedures, at testing agency's option:

1) Liquid Penetrant Inspection: ASTM E 165.
2) Magnetic Particle Inspection: ASTM E 709; performed on root pass and on finished weld. Cracks or zones of incomplete fusion or penetration are not accepted.
3) Ultrasonic Inspection: ASTM E 164.
4) Radiographic Inspection: ASTM E 94.

END OF SECTION 051200

SECTION 054000 - COLD-FORMED METAL FRAMING

PART 1 - GENERAL

1.1 RELATED DOCUMENTS

A. Drawings and general provisions of the Contract, including General and Supplementary Conditions and Division 01 Specification Sections, apply to this Section.

1.2 SUMMARY

A. Section Includes:

1. Load-bearing wall framing.
2. Exterior non-load-bearing wall framing.
3. Interior non-load-bearing wall framing.
4. Soffit framing.
5. Accessories such as clips, stiffeners, bridging, bracing, and fasteners.

1.3 ACTION SUBMITTALS

A. Product Data: For the following:

1. Cold-formed steel framing materials.
2. Load-bearing wall framing.
3. Exterior non-load-bearing wall framing.
4. Interior non-load-bearing wall framing.
5. Vertical deflection clips.
6. Single deflection track.
7. Double deflection track.
8. Soffit framing.
9. Post-installed anchors.
10. Power-actuated anchors.

B. Shop Drawings:

1. Include layout, spacings, sizes, thicknesses, and types of cold-formed steel framing; fabrication; and fastening and anchorage details, including mechanical fasteners.
2. Indicate reinforcing channels, opening framing, supplemental framing, strapping, clips, bracing, bridging, splices, accessories, connection details, and attachment to adjoining work.

C. Delegated Design of Members and Connections: Design of cold-formed metal framing systems and their connections to structure shall be provided by the specialty Structural Engineer of record paid for by the Contractor. Submit curtainwall design with calculations, to the Engineer of Record for review. All submittals shall bear the seal of a registered professional engineer licensed and in good standings with the state of the project locations.

1.4 INFORMATIONAL SUBMITTALS

A. Qualification Data: For testing agency.

B. Qualification Data: For specialty engineer of record.

C. Product Certificates: For each type of code-compliance certification for studs and tracks.

1.5 QUALITY ASSURANCE

A. Installer Qualifications: Engage an experienced Installer who has completed cold-formed metal framing similar in material, design, and extent to that indicated for this Project and with a record of successful in-service performance.

B. Testing Agency Qualifications: Qualified according to ASTM E 329 for testing indicated.

C. Product Tests: Mill certificates or data from a qualified independent testing agency indicating steel sheet complies with requirements, including base-metal thickness, yield strength, tensile strength, total elongation, chemical requirements, and metallic-coating thickness.

PART 2 - PRODUCTS

2.1 MANUFACTURERS

A. Manufacturers: Subject to compliance with requirements, provide products by one (1) of the following or approved alternate:

1. ClarkDietrich
2. MarinoWARE
3. Nuconsteel, A Nucor Company

2.2 PERFORMANCE REQUIREMENTS

A. Cold-Formed Steel Framing Standards: Unless more stringent requirements are indicated, framing shall comply with AISI S100, AISI S200, and the following:

1. Floor and Roof Systems: AISI S210.
2. Wall Studs: AISI S211.
3. Headers: AISI S212.
4. Lateral Design: AISI S213.

B. Coordinate design of cold-formed steel framing with weight, deflection criteria, and connection requirements for attached products including, but not limited to, masonry veneer, insulation panels, wall coverings, ceilings.

C. Design framing systems to withstand design loads without deflections greater than the following:

1. Exterior non-load bearing wall framing system with masonry veneer: Lateral deflection of 1/600 of the wall height.
2. Exterior non-load bearing wall framing system without masonry veneer: Lateral deflection of 1/360 of the wall height.

3. Exterior load bearing wall framing system with masonry veneer: Lateral deflection of 1/600 of the wall height.
4. Exterior load bearing wall framing system without masonry veneer: Lateral deflection of 1/360 of the wall height.

D. Design exterior non-load bearing wall framing to accommodate lateral deflection without regard to contribution of sheathing materials.

2.3 COLD-FORMED STEEL FRAMING MATERIALS

A. Steel Sheet: ASTM A 1003, Structural Grade, Type H, metallic coated, of grade and coating designation as follows:

1. Grade: As required by structural performance, minimum ST33H.
2. Coating: G60.

B. Steel Sheet for Vertical Deflection Clips: ASTM A 653, structural steel, zinc coated, of grade and coating as follows:

1. Grade: As required by structural performance.
2. Coating: G60.

2.4 EXTERIOR LOAD-BEARING WALL FRAMING SUPPORTING TRUSSES

A. Steel Studs: Manufacturer's standard C-shaped steel studs, of web depths indicated, punched, with stiffened flanges, and as follows:

1. Minimum Base-Metal Thickness: 0.068-inch.
2. Flange Width: 1-5/8 inches.

B. Steel Track: Manufacturer's standard U-shaped steel track, of web depths indicated, unpunched, with unstiffened flanges, and as follows:

1. Minimum Base-Metal Thickness: 0.068-inch.
2. Flange Width: 1¼ inches.

C. Steel Box or Back-to-Back Headers: Manufacturer's standard C-shapes used to form header beams, of web depths indicated, unpunched, with stiffened flanges, and as follows:

1. Minimum Base-Metal Thickness: 0.068-inch.
2. Flange Width: 1-5/8 inches.

2.5 INTERIOR LOAD-BEARING WALL FRAMING SUPPORTING TRUSSES

A. Steel Studs: Manufacturer's standard C-shaped steel studs, of web depths indicated, punched, with stiffened flanges, and as follows:

1. Minimum Base-Metal Thickness: 0.068-inch.
2. Flange Width: 2½ inches.

B. Steel Track: Manufacturer's standard U-shaped steel track, of web depths indicated, unpunched, with unstiffened flanges, and as follows:

1. Minimum Base-Metal Thickness: 0.068-inch.
2. Flange Width: 2¼ inches.

C. Steel Box or Back-to-Back Headers: Manufacturer's standard C-shapes used to form header beams, of web depths indicated, unpunched, with stiffened flanges, and as follows:

1. Minimum Base-Metal Thickness: 0.068-inch.
2. Flange Width: 2½ inches.

2.6 EXTERIOR NON-LOAD-BEARING WALL FRAMING

A. Steel Studs: Manufacturer's standard C-shaped steel studs, of web depths indicated, punched, with stiffened flanges, and as follows:

1. Minimum Base-Metal Thickness: 0.054-inch.
2. Flange Width: 1-5/8 inches minimum.

B. Steel Track: Manufacturer's standard U-shaped steel track, of web depths indicated, unpunched, with unstiffened flanges, and as follows:

1. Minimum Base-Metal Thickness: 0.054-inch.
2. Flange Width: 1¼ inches minimum.

C. Vertical Deflection Clips: Manufacturer's standard bypass head clips, capable of accommodating upward and downward vertical displacement of primary structure through positive mechanical attachment to stud web.

D. Single Deflection Track: Manufacturer's single, deep-leg, U-shaped steel track; unpunched, with unstiffened flanges, of web depth to contain studs while allowing free vertical movement, with flanges designed to support horizontal loads and transfer them to the primary structure, and as follows:

1. Minimum Base-Metal Thickness: 0.054-inch.
2. Flange Width: 1-inch plus the design gap for one-story structures and 1-inch plus twice the design gap for other applications.

E. Double Deflection Tracks: Manufacturer's double, deep-leg, U-shaped steel tracks, consisting of nested inner and outer tracks; unpunched, with unstiffened flanges.

1. Outer Track: Of web depth to allow free vertical movement of inner track, with flanges designed to support horizontal loads and transfer them to the primary structure, and as follows:

a. Minimum Base-Metal Thickness: 0.054-inch.
b. Flange Width: 1-inch plus the design gap for one-story structures and 1-inch plus twice the design gap for other applications.

2. Inner Track: Of web depth indicated, and as follows:

a. Minimum Base-Metal Thickness: 0.0428-inch.
b. Flange Width: 2 inches.

2.7 INTERIOR NON-LOAD-BEARING WALL FRAMING

A. Steel Studs: Manufacturer's standard C-shaped steel studs, of web depths indicated, punched, with stiffened flanges, and as follows:

1. Minimum Base-Metal Thickness: 0.043-inch.
2. Flange Width: 1-5/8 inches.
3. Section Properties: Per delegated design by Contractor.

B. Steel Track: Manufacturer's standard U-shaped steel track, of web depths indicated, unpunched, with unstiffened flanges, and as follows:

1. Minimum Base-Metal Thickness: 0.043-inch.
2. Flange Width: 1¼ inches.

C. Vertical Deflection Clips: Manufacturer's standard bypass head clips, capable of accommodating upward and downward vertical displacement of primary structure through positive mechanical attachment to stud web.

D. Single Deflection Track: Manufacturer's single, deep-leg, U-shaped steel track; unpunched, with unstiffened flanges, of web depth to contain studs while allowing free vertical movement, with flanges designed to support horizontal loads and transfer them to the primary structure, and as follows:

1. Minimum Base-Metal Thickness: 0.054-inch.
2. Flange Width: 1-inch plus the design gap for one-story structures and 1-inch plus twice the design gap for other applications.

E. Double Deflection Tracks: Manufacturer's double, deep-leg, U-shaped steel tracks, consisting of nested inner and outer tracks; unpunched, with unstiffened flanges.

1. Outer Track: Of web depth to allow free vertical movement of inner track, with flanges designed to support horizontal loads and transfer them to the primary structure, and as follows:

   a. Minimum Base-Metal Thickness: 0.043-inch.
   b. Flange Width: 1-inch plus the design gap for one-story structures and 1-inch plus twice the design gap for other applications.

2. Inner Track: Of web depth indicated, and as follows:

   a. Minimum Base-Metal Thickness: 0.054-inch.
   b. Flange Width: 2 inches.

2.8 SOFFIT FRAMING

A. Exterior Soffit Frame: Manufacturer's standard C-shaped steel sections, of web depths indicated, with stiffened flanges, and as follows:

1. Minimum Base-Metal Thickness: 0.043-inch.
2. Flange Width: 1-5/8 inches.

2.9 FRAMING ACCESSORIES

A. Fabricate steel-framing accessories from ASTM A 1003, Structural Grade, Type H, metallic coated steel sheet, of same grade and coating designation used for framing members.

B. Provide accessories of manufacturer's standard thickness and configuration, unless otherwise indicated, as follows:

1. Bracing, bridging, and solid blocking.
2. Anchor clips.
3. End clips.
4. Foundation clips.
5. Gusset plates.
6. Stud kickers and knee braces.
7. Joist hangers and end closures.

2.10 ANCHORS, CLIPS, AND FASTENERS

A. Steel Shapes and Clips: ASTM A 36, zinc coated by hot-dip process according to ASTM A 123.

B. Anchor Bolts: ASTM F 1554, threaded carbon-steel hex-headed bolts, carbon-steel nuts, and flat, hardened-steel washers; zinc coated by hot-dip process according to ASTM A 153, Class C

C. Post-Installed Anchors: Fastener systems with bolts of same basic metal as fastened metal, if visible, unless otherwise indicated; with working capacity greater than or equal to the design load, according to an evaluation report acceptable to authorities having jurisdiction, based on ICC-ES AC58 or ICC-ES AC308 as appropriate for the substrate.

1. Uses: Securing cold-formed steel framing to structure.
2. Type: Torque-controlled expansion anchor or adhesive anchor.
3. Material for Interior Locations: Carbon-steel components zinc plated to comply with ASTM B633 or ASTM F1941, Class Fe/Zn 5, unless otherwise indicated.
4. Material for Exterior or Interior Locations and Where Stainless-Steel Is Indicated: Alloy Group 2 stainless-steel bolts, ASTM F 593, and nuts, ASTM F 594.

D. Power-Actuated Anchors: Fastener systems with working capacity greater than or equal to the design load, according to an evaluation report acceptable to authorities having jurisdiction, based on ICC-ES AC70.

E. Mechanical Fasteners: ASTM C 1513, corrosion-resistant-coated, self-drilling, self-tapping, steel drill screws.

1. Head Type: Low-profile head beneath sheathing; manufacturer's standard elsewhere.

2.11 MISCELLANEOUS MATERIALS

A. Galvanizing Repair Paint: ASTM A 780, MIL-P-21035B, or SSPC-Paint 20.

B. Shims: Load-bearing, high-density, multi-monomer, non-leaching plastic; or cold-formed steel of same grade and metallic coating as framing members supported by shims.

2.12 FABRICATION

A. Fabricate cold-formed steel framing and accessories plumb, square, and true to line, and with connections securely fastened, according to referenced AISI's specifications and standards, manufacturer's written instructions, and requirements in this Section.

1. Fabricate framing assemblies using jigs or templates.
2. Cut framing members by sawing or shearing; do not torch cut.
3. Fasten cold-formed steel framing members by welding, screw fastening, clinch fastening, pneumatic pin fastening, or riveting as standard with fabricator. Wire tying of framing members is not permitted.

    a. Comply with AWS D1.3 requirements and procedures for welding, appearance and quality of welds, and methods used in correcting welding work.
    b. Locate mechanical fasteners and install according to Shop Drawings, with screws penetrating joined members by no fewer than three (3) exposed screw threads.

4. Fasten other materials to cold-formed steel framing by welding, bolting, pneumatic pin fastening, or screw fastening, according to Shop Drawings.

B. Reinforce, stiffen, and brace framing assemblies to withstand handling, delivery, and erection stresses. Lift fabricated assemblies by means that prevent damage or permanent distortion.

C. Tolerances: Coordinate tolerance of fabrication with attached products. Fabricate assemblies level, plumb, and true to line to a maximum allowable variation of 1/8-inch in 10 feet and as follows:

1. Spacing: Space individual framing members no more than plus or minus 1/8-inch from plan location. Cumulative error shall not exceed minimum fastening requirements of sheathing or other finishing materials.
2. Squareness: Fabricate each cold-formed steel framing assembly to a maximum out-of-square tolerance of 1/8-inch.

PART 3 - EXECUTION

3.1 EXAMINATION

A. Examine substrates, areas, conditions, and abutting structural framing for compliance with requirements for installation tolerances and other conditions affecting performance of the Work.

B. Proceed with installation only after unsatisfactory conditions have been corrected.

3.2 PREPARATION

A. Before sprayed fire-resistive materials are applied, attach continuous angles, supplementary framing, or tracks to structural members indicated to receive sprayed fire-resistive materials.

B. After applying sprayed fire-resistive materials, remove only as much of these materials as needed to complete installation of cold-formed framing without reducing thickness of fire-resistive

materials below that required to obtain fire-resistance ratings indicated. Protect remaining fire-resistive materials from damage.

C. Install load-bearing shims or grout between the underside of load-bearing wall bottom track and the top of foundation wall or slab at locations with a gap larger than ¼-inch to ensure a uniform bearing surface on supporting concrete or masonry construction.

D. Install sill sealer gasket at the underside of wall bottom track or rim track and at the top of foundation wall or slab at stud or joist locations.

3.3 INSTALLATION, GENERAL

A. Cold-formed steel framing may be shop or field fabricated for installation, or it may be field assembled.

B. Install cold-formed steel framing according to AISI S200, AISI S202, and manufacturer's written instructions unless more stringent requirements are indicated.

C. Install shop- or field-fabricated, cold-formed framing and securely anchor to supporting structure.

1. Screw, bolt, or weld wall panels at horizontal and vertical junctures to produce flush, even, true-to-line joints with maximum variation in plane and true position between fabricated panels not exceeding 1/16-inch.

D. Install cold-formed steel framing and accessories plumb, square, and true to line, and with connections securely fastened.

1. Cut framing members by sawing or shearing; do not torch cut.
2. Fasten cold-formed steel framing members by welding, screw fastening, clinch fastening, or riveting. Wire tying of framing members is not permitted.

a. Comply with AWS D1.3 requirements and procedures for welding, appearance and quality of welds, and methods used in correcting welding work.
b. Locate mechanical fasteners, install according to Shop Drawings, and comply with requirements for spacing, edge distances, and screw penetration.

E. Install framing members in one-piece lengths unless splice connections are indicated for track or tension members.

F. Install temporary bracing and supports to secure framing and support loads equal to those for which structure was designed. Maintain braces and supports in place, undisturbed, until entire integrated supporting structure has been completed and permanent connections to framing are secured.

G. Do not bridge building expansion joints with cold-formed steel framing. Independently frame both sides of joints.

H. Install insulation, specified in Section 072100 "Thermal Insulation," in framing-assembly members, such as headers, sills, boxed joists, and multiple studs at openings, that are inaccessible on completion of framing work.

I. Fasten hole-reinforcing plate over web penetrations that exceed size of manufacturer's approved or standard punched openings.

3.4 INSTALLATION OF LOAD-BEARING WALL FRAMING

A. Install continuous top and bottom tracks sized to match studs. Align tracks accurately and securely anchor at corners and ends, and at spacings as follows:

1. Anchor Spacing: As shown on Shop Drawings.

B. Squarely seat studs against top and bottom tracks, with gap not exceeding 1/8-inch between the end of wall-framing member and the web of track.

1. Fasten both flanges of studs to top and bottom tracks.
2. Space studs as follows:

a. Stud Spacing: As indicated on the Shop Drawings.

C. Set studs plumb, except as needed for diagonal bracing or required for non-plumb walls or warped surfaces and similar configurations.

D. Align studs vertically where floor framing interrupts wall-framing continuity. Where studs cannot be aligned, continuously reinforce track to transfer loads.

E. Align floor and roof framing over studs according to AISI S200, Section C1. Where framing cannot be aligned, continuously reinforce track to transfer loads.

F. Anchor studs abutting structural columns or walls, including masonry walls, to supporting structure.

G. Install headers over wall openings wider than stud spacing. Locate headers above openings. Fabricate headers of compound shapes indicated or required to transfer load to supporting studs, complete with clip-angle connectors, web stiffeners, or gusset plates.

1. Frame wall openings with not less than a double stud at each jamb of frame. Fasten jamb members together to uniformly distribute loads.
2. Install tracks and jack studs above and below wall openings. Anchor tracks to jamb studs with clip angles or by welding, and space jack studs same as full-height wall studs.

H. Install supplementary framing, blocking, and bracing in stud framing indicated to support fixtures, equipment, services, casework, heavy trim, furnishings, and similar work requiring attachment to framing.

1. If type of supplementary support is not indicated, comply with stud manufacturer's written recommendations and industry standards in each case, considering weight or load resulting from item supported.

I. Install horizontal bridging in stud system, spaced vertically as indicated on Shop Drawings. Fasten at each stud intersection.

1. Channel Bridging: Cold-rolled steel channel, welded or mechanically fastened to webs of punched studs with a minimum of two (2) screws into each flange of the clip angle for framing members up to 6 inches deep.
2. Bar Bridging: Proprietary bridging bars installed according to manufacturer's written instructions.

J. Install steel sheet diagonal bracing straps to both stud flanges; terminate at and fasten to reinforced top and bottom tracks. Fasten clip-angle connectors to multiple studs at ends of bracing and anchor to structure.

K. Install miscellaneous framing and connections, including supplementary framing, web stiffeners, clip angles, continuous angles, anchors, and fasteners, to provide a complete and stable wall-framing system.

3.5 INSTALLATION OF EXTERIOR NONLOADBEARING WALL FRAMING

A. Install continuous tracks sized to match studs. Align tracks accurately and securely anchor to supporting structure.

B. Fasten both flanges of studs to top and bottom track unless a deflection track is specified. Space studs as follows:

1. Stud Spacing: 16 inches or as required based on delegated design performance.

C. Set studs plumb, except as needed for diagonal bracing or required for non-plumb walls or warped surfaces and similar requirements.

D. Isolate non-load-bearing steel framing from building structure to prevent transfer of vertical loads while providing lateral support.

1. Install single deep-leg deflection tracks and anchor to building structure.
2. Install double deep-leg deflection tracks and anchor outer track to building structure.
3. Connect vertical deflection clips to bypassing or infill studs and anchor to building structure.

E. Install horizontal bridging in wall studs, spaced vertically in rows indicated on Shop Drawings but not more than 48 inches apart. Fasten at each stud intersection.

1. Channel Bridging: Cold-rolled steel channel, welded or mechanically fastened to webs of punched studs.
2. Strap Bridging: Combination of flat, taut, steel sheet straps of width and thickness indicated and stud-track solid blocking of width and thickness to match studs. Fasten flat straps to stud flanges and secure solid blocking to stud webs or flanges.
3. Bar Bridging: Proprietary bridging bars installed according to manufacturer's written instructions.

F. Top Bridging for Single Deflection Track: Install row of horizontal bridging within 18 inches maximum of single deflection track. Install a combination of bridging and stud or stud-track solid blocking of width and thickness matching studs, secured to stud webs or flanges.

1. Install solid blocking at centers indicated on Shop Drawings.

G. Install miscellaneous framing and connections, including stud kickers, web stiffeners, clip angles, continuous angles, anchors, and fasteners, to provide a complete and stable wall-framing system.

3.6 INSTALLATION OF INTERIOR NONLOADBEARING WALL FRAMING

A. Install continuous tracks sized to match studs. Align tracks accurately and securely anchor to supporting structure.

B. Fasten both flanges of studs to top and bottom track unless a deflection track is specified. Space studs as follows:

1. Stud Spacing: 16 inches maximum.

C. Set studs plumb, except as needed for diagonal bracing or required for non-plumb walls or warped surfaces and similar requirements.

D. Isolate non-load-bearing steel framing from building structure to prevent transfer of vertical loads while providing lateral support.

1. Install single deep-leg deflection tracks and anchor to building structure.
2. Install double deep-leg deflection tracks and anchor outer track to building structure.
3. Connect vertical deflection clips to studs and anchor to building structure.
4. Connect drift clips to cold-formed steel metal framing and anchor to building structure.

E. Install horizontal bridging in wall studs, spaced vertically in rows indicated on Shop Drawings but not more than 48 inches apart. Fasten at each stud intersection.

F. Top Bridging for Single Deflection Track: Install row of horizontal bridging within 18 inches maximum of single deflection track. Install a combination of bridging and stud or stud-track solid blocking of width and thickness matching studs, secured to stud webs or flanges.

1. Install solid blocking at centers indicated on Shop Drawings.

G. Install miscellaneous framing and connections, including stud kickers, web stiffeners, clip angles, continuous angles, anchors, and fasteners, to provide a complete and stable wall-framing system.

3.7 INSTALLATION TOLERANCES

A. Install cold-formed steel framing level, plumb, and true to line to a maximum allowable tolerance variation of 1/8-inch in 10 feet and as follows:

1. Space individual framing members no more than plus or minus 1/8-inch from plan location. Cumulative error shall not exceed minimum fastening requirements of sheathing or other finishing materials.

3.8 REPAIR

A. Galvanizing Repairs: Prepare and repair damaged galvanized coatings on fabricated and installed cold-formed steel framing with galvanized repair paint according to ASTM A 780 and manufacturer's written instructions.

3.9 FIELD QUALITY CONTROL

A. Testing: Owner will engage a qualified independent testing and inspecting agency to perform field tests and inspections and prepare test reports.

B. Field and shop welds will be subject to testing and inspecting.

C. Testing agency will report test results promptly and in writing to Contractor and Architect.

D. Cold-formed steel framing will be considered defective if it does not pass tests and inspections.

E. Additional testing and inspecting, at Contractor's expense, will be performed to determine compliance of replaced or additional work with specified requirements.

3.10 PROTECTION

A. Provide final protection and maintain conditions, in a manner acceptable to manufacturer and Installer, that ensure that cold-formed steel framing is without damage or deterioration at time of Substantial Completion.

END OF SECTION 054000

SECTION 054010 - LIGHT GAUGE STEEL ROOF TRUSSES

PART 1 - GENERAL

1.1 RELATED DOCUMENTS

A. Drawings and general provisions of the Contract, including General and Supplementary Conditions and Division 01 Specification Sections, apply to this Section.

1.2 SUMMARY

A. Section includes pre-engineered, pre-fabricated light gauge cold formed steel framing elements. Work includes:

1. Light gauge cold formed steel roof trusses.
2. Anchorage bracing and bridging.

B. Related Work:

1. Drywall attachment.
2. Roofing, fascia, and soffit.

1.3 REFERENCES

A. Reference Standards:

1. ASTM:

a. A 653-94 “Sheet Steel, Zinc-Coated Galvanized) or Zinc-Iron Alloy-Coated (Galvannealed) by the Hot Dip Process”
b. A 780-93a “Repair of Damaged and Uncoated Areas of Hot-Dip Galvanized Coatings”

2. American Welding Society (AWS):

a. D1.1 “Structural Welding Code – Steel”
b. D1.3 “Structural Welding Code – Sheet Steel”

1.4 PERFORMANCE REQUIREMENTS

A. AISI “Specifications”: Calculate structural characteristics of cold formed steel truss members according to AISI’s “Specification for the design of Cold Formed Steel Structural Members, 1986 (1990).”

B. Structural Performance: Design, engineer, fabricate, and erect cold formed steel trusses to withstand specified design loads within limits and under conditions required.

1. Design Loads: As specified.
2. Deflections: Live load deflection meeting the following (unless otherwise specified):

C. Roof Trusses: Vertical deflection less than or equal to 1/240 of the span.

1. Design framing systems to provide for movement of framing members without damage or overstressing, sheathing failure, connection failure, undue strain on fasteners, and anchors, or other detrimental effects when subject to a maximum ambient temperature change (range) of 120 deg. F (67 deg C).

1.5 SUBMITTALS

A. Submit manufacturer's product data and installation instructions for each type of cold formed steel framing and accessory required.

B. Submit shop drawings showing number, type, location, spacing, size and gauge of members, method of attachment to supporting members, and all necessary erection details. Indicate supplemental bracing, strapping, splices, bridging, accessories, and details required for proper installation.

C. Submit detailed roof truss layouts.

D. Submit truss drawings, sealed and signed by a qualified, registered Professional Engineer, verifying truss ability to meet local code and design requirements including:

1. Description of the design criteria.
2. Engineering analysis depicting member stresses and truss deflection.
3. Truss member sizes and gauges and connections at truss joints.
4. Truss support reactions.
5. Top chord. Bottom chord and web bracing requirements.

1.6 QUALITY ASSURANCE

A. Fabricator Qualifications: Fabrication shall be performed by a cold formed steel truss fabricator with experience designing and fabricating cold formed steel truss systems equal in material, design, and extent to the systems required for this Project.

1. Cold formed steel truss system installation shall be performed by an experienced installer approved by the steel truss system fabricator.

B. Welding Standards: Comply with applicable provisions of AWS D1.1 "Structural Welding Code Steel" and AWS D1.3 "Structural Welding Code Sheet Steel."

1. Qualify welding processes and welding operators in accordance with AWS "Standard Qualification Procedure."

1.7 DELIVERY, STORAGE, AND HANDLING

A. Deliver materials in manufacturer's unopened containers or bundles, fully identified by name, brand, type, and grade. Exercise care to avoid damage during unloading, storing, and erection.

B. Store trusses on blocking, pallets, platforms, or other supports off the ground and in an upright position sufficiently braced to avoid damage from excessive bending.

C. Protect trusses and accessories from corrosion, deformation, damage, and deterioration when stored at job site. Keep trusses free of dirt and other foreign matter.

1.8 PROJECT CONDITIONS

A. During construction, adequately distribute all loads applied to trusses so as not to exceed the carrying capacity of any one joist, truss or other component.

PART 2 - PRODUCTS

2.1 MANUFACTURERS

A. Manufacturer: Ultra-Span Truss Manufacturer or approved equal.

2.2 COMPONENTS

A. Systems Components: MiTek Industries, Inc. **ULTRA-SPAN** and **POSI-STRUT** light gauge steel roof truss components or approved equal.

B. Provide manufacturer's standard steel truss members, bracing, bridging, blocking, forcements, fasteners, and accessories with each type of steel framing required, as recommended by the manufacturer for the applications indicated and as needed to provide a complete light gauge cold formed steel truss system.

2.3 MATERIALS

A. Materials:

1. All component gauges: Fabricate components of structural quality steel sheet per ASTM A 653 with minimum yield strength of 40,000 psi.
2. Bracing, Bridging, and Blocking Members: Fabricate components of commercial quality steel sheet per ASTM A 653 with minimum yield strength of 33,000 psi.

B. Steel Truss Components: Provide sizes, shapes, and gauges indicated or as required by design.

1. Design Uncoated-Steel Thickness: 16 gauge, 0.0570-inch.

C. Finish: Provide components with protective zinc coating complying with ASTM A 653, minimum G60 coating.

D. Fastenings:

1. Manufacturer recommended self-drilling, self-tapping screws with corrosion-resistant plated finish. Fasteners shall be of sufficient size and number to ensure the strength of the connection.
2. Welding: Comply with AWS D1.1 when applicable and AWS D1.3 for welding base metals less than 1/8-inch-thick.
3. Other fasteners as accepted by truss engineer.

2.4 FABRICATION

A. Factory fabricate cold formed steel trusses plumb square, true to line, and with connections securely fastened, according to manufacturer's recommendations and the requirements of the Section.

1. Fabricate truss assemblies in jig templates.
2. Cut truss members by sawing or shearing or plasma cutting.
3. Fasten cold formed steel truss members by welding or screw fastening or other methods as standard with fabricator. Wire tying of framing members is not permitted.

B. Comply with AWS requirements and procedures for welding, appearance and quality of welds, and methods used in correcting, welding work.

C. Locate mechanical fastener and install according to cold formed steel truss component manufacturer's instructions with screw penetrating joined members by not less than three (3) exposed screw threads.

D. Care shall be taken during handling, delivery, and erection. Brace block or reinforce truss as necessary to minimize member/connection stresses.

E. Fabrication Tolerances: Fabricate trusses to a maximum allowable tolerance variation from plumb, level, and true to line of 1/8-inch in 10 feet (1:960) and as follows:

1. Spacing: Space individual trusses no more than plus or minus 1/8-inch from plan location. Cumulative error shall not exceed minimum fastening requirements of sheathing or other finishing materials.
2. Squareness: Fabricate each cold form steel truss to a maximum out-of-square tolerance of 1/8-inch.

PART 3 - EXECUTION

3.1 EXAMINATION

A. Examine structure, substrates, and installation conditions. Do not proceed with cold formed steel truss installation until unsatisfactory conditions have been corrected.

B. Installation constitutes acceptance of existing conditions and responsibility for satisfactory performance.

3.2 INSTALLATION, GENERAL

A. General:

1. Erection of trusses, including proper handling, safety precautions, temporary bracing, and other safeguards or procedures are the responsibility of the Contractor and Contractor's installer.
2. Exercise care and provide erect on bracing required to prevent toppling of trusses during erection.

B. Erect trusses with plane of truss webs vertical and parallel to each other accurately located at design spacing indicated.

C. Provide proper lifting equipment suited to sizes and types of trusses required, applied at lift points recommended by truss fabricator. Exercise care to avoid damage to truss members during erection and to keep horizontal bending of the trusses to a minimum.

D. Provide framing anchors as indicated or accepted on the engineering design drawing or erection drawings. Anchor trusses securely at bearing points.

E. Install roof framing and accessories plumb, square, true to line, and with connections securely fastened according to manufacturer's recommendations.

1. Do NOT cut truss members without prior approval of truss engineer.
2. Fasten cold formed steel roof framing by welding or screw fastening, as standard with fabricator. Wire tying of roof framing is not permitted. Comply with AWS requirements and procedures for welding, appearance and quality of welds and methods used in correcting welding work.

   a. Locate mechanical fasteners and install according to cold formed roof framing manufacturer's instructions with screw penetrating joined members by not less than three (3) exposed threads.
   b. Install roof framing in one-piece lengths, unless splice connections are indicated.
   c. Provide temporary bracing – leave in place until trusses are permanently stabilized.

F. Erection Tolerances: Install trusses to a maximum allowable tolerance variation from plumb, level, and true to line of 1/8-inch in 10 feet (1:960) and as follows:

1. Space individual trusses no more than plus or minus 1/8-inch from plan location. Cumulative error shall not exceed minimum fastening requirements of sheathing or other finishing materials.

3.3 ROOF TRUSS INSTALLATION

A. Install, bridge, and brace trusses according to manufacturer's recommendations and requirements of this Section.

B. Space trusses as follows:

1. Truss Spacing: 24 inches.
2. Do not alter, cut, or remove truss members or connections or truss members.

C. Erect trusses with plane of truss webs plumb and parallel to each other, align, and accurately position at spacing indicated.

D. Erect trusses without damaging truss members or connections.

E. Align truss bottom chords with load-bearing studs or continuously reinforce tract to transfer loads to structure. Anchor trusses securely at all bearing points.

F. Install continuous bridging and permanent truss bracing per truss design requirements.

G. Install necessary roof cross and diagonal bracing per design professional recommendations.

3.4 REPAIRS AND PROTECTION

A. Galvanizing Repairs: Prepare and repair damaged galvanized coatings on fabricated installed cold formed steel framing with galvanized repair paint according to ASTM A 780 and manufacturer's instructions.

END OF SECTION 054010

SECTION 055000 - METAL FABRICATIONS

PART 1 - GENERAL

1.1 RELATED DOCUMENTS

A. Drawings and general provisions of the Contract, including General and Supplementary Conditions and Division 01 Specification Sections, apply to this Section.

1.2 SUMMARY

A. Section Includes:

1. Steel framing and supports for operable partitions.
2. Steel framing and supports for mechanical and electrical equipment.
3. Steel framing and supports for applications where framing and supports are not specified in other Sections.
4. Metal ladders.
5. Metal downspout boots.

B. Products furnished, but not installed, under this Section include the following:

1. Anchor bolts, steel pipe sleeves, slotted-channel inserts, and wedge-type inserts indicated to be cast into concrete or built into unit masonry.

C. Related Requirements:

1. Section 051200 "Structural Steel Framing" for steel framing, supports, elevator machine beams, hoist beams, divider beams, door frames, and other steel items attached to the structural-steel framing.

1.3 COORDINATION

A. Coordinate installation of metal fabrications that are anchored to or that receive other work. Furnish setting drawings, templates, and directions for installing anchorages, including sleeves, concrete inserts, anchor bolts, and items with integral anchors, that are to be embedded in concrete or masonry. Deliver such items to Project site in time for installation.

1.4 ACTION SUBMITTALS

A. Product Data: For the following:

1. Nonslip aggregates and nonslip-aggregate surface finishes.
2. Fasteners.
3. Metal downspout boots.

B. Shop Drawings: Show fabrication and installation details. Include plans, elevations, sections, and details of metal fabrications and their connection. Show anchorage and accessory items.

C. Provide Shop Drawings for the following:

1. Steel framing and supports for operable partitions.
2. Steel framing and supports for mechanical and electrical equipment.
3. Steel framing and supports for applications where framing and supports are not specified in other Sections.
4. Metal ladders.

D. Delegated-Design Submittal: For ladders, including analysis data signed and sealed by the qualified professional engineer responsible for their preparation.

1.5 INFORMATIONAL SUBMITTALS

A. Qualification Data: For professional engineer's experience with providing delegated-design engineering services of the kind indicated, including documentation that engineer is licensed in the jurisdiction in which Project is located.

B. Welding certificates.

C. Research Reports: For post-installed anchors.

1.6 QUALITY ASSURANCE

A. Welding Qualifications: Qualify procedures and personnel in accordance with the following:

1. AWS D1.1, "Structural Welding Code - Steel."

1.7 FIELD CONDITIONS

A. Field Measurements: Verify actual locations of walls, floor slabs, decks, and other construction contiguous with metal fabrications by field measurements before fabrication.

PART 2 - PRODUCTS

2.1 PERFORMANCE REQUIREMENTS

A. Delegated Design: Engage a qualified professional engineer, as defined in Section 014000 "Quality Requirements," to design ladders.

B. Thermal Movements: Allow for thermal movements from ambient and surface temperature changes acting on exterior metal fabrications by preventing buckling, opening of joints, overstressing of components, failure of connections, and other detrimental effects.

1. Temperature Change: 120 deg F, ambient; 180 deg F, material surfaces.

2.2 METALS

A. Metal Surfaces, General: Provide materials with smooth, flat surfaces unless otherwise indicated. For metal fabrications exposed to view in the completed Work, provide materials without seam marks, roller marks, rolled trade names, or blemishes.

B. Steel Plates, Shapes, and Bars: ASTM A 36.

C. Steel Tubing: ASTM A 500, cold-formed steel tubing.

D. Steel Pipe: ASTM A 53, Standard Weight (Schedule 40) unless otherwise indicated.

E. Cast Iron: Either gray iron, ASTM A48/A48M, or malleable iron, ASTM A 47, unless otherwise indicated.

2.3 FASTENERS

A. General: Unless otherwise indicated, provide Type 304 stainless-steel fasteners for exterior use and zinc-plated fasteners with coating complying with ASTM B633 or ASTM F 1941, Class Fe/Zn 5, at exterior walls. Select fasteners for type, grade, and class required.

B. Steel Bolts and Nuts: Regular hexagon-head bolts, ASTM A 307, Grade A; with hex nuts, ASTM A 563; and, where indicated, flat washers.

C. High-Strength Bolts, Nuts, and Washers: ASTM F 3125, Grade A325, Type 3, heavy-hex steel structural bolts; ASTM A 563, Grade DH3, heavy-hex carbon-steel nuts; and where indicated, flat washers.

D. Anchor Bolts: ASTM F1554, Grade 36, of dimensions indicated; with nuts, ASTM A 563; and, where indicated, flat washers.

1. Hot-dip galvanize or provide mechanically deposited, zinc coating where item being fastened is indicated to be galvanized.

E. Anchors, General: Capable of sustaining, without failure, a load equal to six (6) times the load imposed when installed in unit masonry and four (4) times the load imposed when installed in concrete, as determined by testing in accordance with ASTM E 488, conducted by a qualified independent testing agency.

F. Cast-in-Place Anchors in Concrete: Either threaded or wedge type unless otherwise indicated; galvanized ferrous castings, either ASTM A 47 malleable iron or ASTM A 27 cast steel. Provide bolts, washers, and shims as needed, all hot-dip galvanized per ASTM F 2329.

G. Post-Installed Anchors: Torque-controlled expansion anchors.

1. Material for Interior Locations: Carbon-steel components zinc plated to comply with ASTM B 633 or ASTM F 1941, Class Fe/Zn 5, unless otherwise indicated.
2. Material for Exterior Locations and Where Stainless-Steel Is Indicated: Alloy Group 1 stainless-steel bolts, ASTM F 593, and nuts, ASTM F 594.

2.4 MISCELLANEOUS MATERIALS

A. Shop Primers: Provide primers that comply with Sections 099113 "Exterior Painting," 099123 "Interior Painting," and 099600 "High-Performance Coatings."

B. Shop Primer for Galvanized Steel: Primer formulated for exterior use over zinc-coated metal and compatible with finish paint systems indicated.

C. Galvanizing Repair Paint: High-zinc-dust-content paint complying with SSPC-Paint 20 and compatible with paints specified to be used over it.

D. Bituminous Paint: Cold-applied asphalt emulsion complying with ASTM D 1187.

2.5 FABRICATION, GENERAL

A. Shop Assembly: Preassemble items in the shop to greatest extent possible. Disassemble units only as necessary for shipping and handling limitations. Use connections that maintain structural value of joined pieces. Clearly mark units for reassembly and coordinated installation.

B. Cut, drill, and punch metals cleanly and accurately. Remove burrs and ease edges to a radius of approximately 1/32-inch unless otherwise indicated. Remove sharp or rough areas on exposed surfaces.

C. Form bent-metal corners to smallest radius possible without causing grain separation or otherwise impairing work.

D. Form exposed work with accurate angles and surfaces and straight edges.

E. Weld corners and seams continuously to comply with the following:

1. Use materials and methods that minimize distortion and develop strength and corrosion resistance of base metals.
2. Obtain fusion without undercut or overlap.
3. Remove welding flux immediately.
4. At exposed connections, finish exposed welds and surfaces smooth and blended so no roughness shows after finishing and contour of welded surface matches that of adjacent surface.

F. Form exposed connections with hairline joints, flush and smooth, using concealed fasteners or welds where possible. Where exposed fasteners are required, use Phillips flat-head (countersunk) fasteners unless otherwise indicated. Locate joints where least conspicuous.

G. Fabricate seams and other connections that are exposed to weather in a manner to exclude water. Provide weep holes where water may accumulate.

H. Cut, reinforce, drill, and tap metal fabrications as indicated to receive finish hardware, screws, and similar items.

I. Provide for anchorage of type indicated, coordinate with supporting structure. Space anchoring devices to secure metal fabrications rigidly in place and to support indicated loads.

J. Where units are indicated to be cast into concrete or built into masonry, equip with integrally welded steel strap anchors, 1/8 by 1½ inches, with a minimum 6-inch embedment and 2-inch hook, not less than 8 inches from ends and corners of units and 24 inches o.c., unless otherwise indicated.

2.6 MISCELLANEOUS FRAMING AND SUPPORTS

A. General: Provide steel framing and supports not specified in other Sections as needed to complete the Work.

B. Fabricate units from steel shapes, plates, and bars of welded construction unless otherwise indicated. Fabricate to sizes, shapes, and profiles indicated and as necessary to receive adjacent construction.

1. Furnish inserts for units installed after concrete is placed.

B. Fabricate supports for operable partitions from continuous steel beams of sizes recommended by partition manufacturer with attached bearing plates, anchors, and braces as recommended by partition manufacturer. Drill or punch bottom flanges of beams to receive partition track hanger rods; locate holes where indicated on operable partition Shop Drawings.

C. Galvanize miscellaneous framing and supports where indicated.

2.7 METAL LADDERS

A. General:

1. Comply with ANSI A14.3[, except for elevator pit ladders].

B. Steel Ladders:

1. Space siderails 18 inches apart unless otherwise indicated.
2. Siderails: Continuous, 1½-inch-diameter steel pipe.
3. Rungs: 1¼ inch-diameter steel bars.
4. Fit rungs in centerline of siderails; plug-weld and grind smooth on outer rail faces.
5. Provide nonslip surfaces on top of each rung, either by coating rung with aluminum-oxide granules set in epoxy-resin adhesive or by using a type of manufactured rung filled with aluminum-oxide grout.
6. Support each ladder at top and bottom and not more than 60 inches o.c. with welded or bolted steel brackets.
7. Galvanize ladders, including brackets.

2.8 METAL DOWNSPOUT BOOTS

A. Basis-of-Design:

1. Downspoutboots.com, a division of J.R. Hoe

B. Manufacturers: Subject to compliance with requirements, available manufacturers offering products that may be incorporated into the Work include, but are not limited to, the following:

1. Barry Pattern & Foundry
2. Neenah Foundry
3. Zurn Industries, LLC
4. Substitutions: Under provisions of Section 012500 “Substitution Procedures”.

C. Source Limitations: Obtain downspout boots from single source from single manufacturer.

D. Provide downspout boots made from cast iron in heights indicated with inlets of size and shape to suit downspouts. Provide units with flanges and holes for countersunk anchor bolts.

1. Outlet: Vertical, to discharge into pipe.

E. Prime cast-iron downspout boots with primer specified in Section 099113 “Exterior Painting”.

2.9 GENERAL FINISH REQUIREMENTS

A. Finish metal fabrications after assembly.

B. Finish exposed surfaces to remove tool and die marks and stretch lines, and to blend into surrounding surface.

2.10 STEEL AND IRON FINISHES

A. Galvanizing: Hot-dip galvanize items as indicated to comply with ASTM A 153 for steel and iron hardware and with ASTM A 123 for other steel and iron products.

1. Do not quench or apply post galvanizing treatments that might interfere with paint adhesion.

B. Preparation for Shop Priming Galvanized Items: After galvanizing, thoroughly clean galvanized surfaces of grease, dirt, oil, flux, and other foreign matter, and treat with metallic phosphate process.

D. Preparation for Shop Priming: Prepare surfaces to comply with SSPC-SP 3, "Power Tool Cleaning."

E. Shop Priming: Apply shop primer to comply with SSPC-PA 1, "Paint Application Specification No. 1: Shop, Field, and Maintenance Painting of Steel," for shop painting.

1. Stripe paint corners, crevices, bolts, welds, and sharp edges.

PART 3 - EXECUTION

3.1 INSTALLATION, GENERAL

A. Cutting, Fitting, and Placement: Perform cutting, drilling, and fitting required for installing metal fabrications. Set metal fabrications accurately in location, alignment, and elevation; with edges and surfaces level, plumb, true, and free of rack; and measured from established lines and levels.

B. Fit exposed connections accurately together to form hairline joints. Weld connections that are not to be left as exposed joints but cannot be shop welded because of shipping size limitations. Do not weld, cut, or abrade surfaces of exterior units that have been hot-dip galvanized after fabrication and are for bolted or screwed field connections.

C. Field Welding: Comply with the following requirements:

1. Use materials and methods that minimize distortion and develop strength and corrosion resistance of base metals.
2. Obtain fusion without undercut or overlap.
3. Remove welding flux immediately.

4. At exposed connections, finish exposed welds and surfaces smooth and blended so no roughness shows after finishing and contour of welded surface matches that of adjacent surface.

D. Fastening to In-Place Construction: Provide anchorage devices and fasteners where metal fabrications are required to be fastened to in-place construction. Provide threaded fasteners for use with concrete and masonry inserts, toggle bolts, through bolts, lag screws, wood screws, and other connectors.

E. Provide temporary bracing or anchors in formwork for items that are to be built into concrete, masonry, or similar construction.

3.2 INSTALLATION OF MISCELLANEOUS FRAMING AND SUPPORTS

A. General: Install framing and supports to comply with requirements of items being supported, including manufacturers' written instructions and requirements indicated on Shop Drawings.

B. Anchor supports for operable partitions securely to, and rigidly brace from, building structure.

3.3 REPAIRS

A. Galvanized Surfaces: Clean field welds, bolted connections, and abraded areas and repair galvanizing to comply with ASTM A 780.

END OF SECTION 055000

SECTION 061000 - ROUGH CARPENTRY

PART 1 - GENERAL

1.1 RELATED DOCUMENTS

A. Drawings and general provisions of the Contract, including General and Supplementary Conditions and Division 01 Specification Sections, apply to this Section.

1.2 SUMMARY

A. Section Includes:

1. Framing with dimension lumber.
2. Framing with engineered wood products.
3. Rooftop equipment bases and support curbs.
4. Wood blocking and nailers.
5. Wood furring and grounds.
6. Plywood backing panels.

B. Related Requirements:

1. Section 061600 "Sheathing" for sheathing, subflooring, and underlayment.

1.3 DEFINITIONS

A. Boards or Strips: Lumber of less than 2 inches nominal size in least dimension.

B. Exposed Framing: Framing not concealed by other construction.

C. Dimension Lumber: Lumber of 2 inches nominal or greater but less than 5 inches nominal in least dimension.

D. Lumber grading agencies, and the abbreviations used to reference them, include the following:

1. NeLMA: Northeastern Lumber Manufacturers' Association.
2. NLGA: National Lumber Grades Authority.
3. WCLIB: West Coast Lumber Inspection Bureau.
4. WWPA: Western Wood Products Association.

1.4 ACTION SUBMITTALS

A. Product Data: For each type of process and factory-fabricated product. Indicate component materials and dimensions and include construction and application details.

1. Include data for wood-preservative treatment from chemical treatment manufacturer and certification by treating plant that treated materials comply with requirements. Indicate type of preservative used and net amount of preservative retained.
2. Include copies of warranties from chemical treatment manufacturers for each type of treatment.

1.5 INFORMATIONAL SUBMITTALS

A. Material Certificates: For dimension lumber specified to comply with minimum allowable unit stresses. Indicate species and grade selected for each use and design values approved by the ALSC Board of Review.

B. Evaluation Reports: For the following, from ICC-ES:

1. Wood-preservative-treated wood.
2. Engineered wood products.
3. Power-driven fasteners.
4. Powder-actuated fasteners.
5. Post-installed anchors.
6. Metal framing anchors.
7. Expansion anchors.

1.6 DELIVERY, STORAGE, AND HANDLING

A. Stack wood products flat with spacers beneath and between each bundle to provide air circulation. Protect lumber from weather by covering with waterproof sheeting, securely anchored. Provide for air circulation around stacks and under coverings.

PART 2 - PRODUCTS

2.1 WOOD PRODUCTS, GENERAL

A. Lumber: DOC PS 20 and applicable rules of grading agencies indicated. If no grading agency is indicated, provide lumber that complies with the applicable rules of any rules-writing agency certified by the ALSC Board of Review. Provide lumber graded by an agency certified by the ALSC Board of Review to inspect and grade lumber under the rules indicated.

1. Factory mark each piece of lumber with grade stamp of grading agency.
2. Where nominal sizes are indicated, provide actual sizes required by DOC PS 20 for moisture content specified. Where actual sizes are indicated, they are minimum dressed sizes for dry lumber.
3. Provide dressed lumber, S4S, unless otherwise indicated.

B. Maximum Moisture Content of Lumber: Fifteen percent (15%) unless otherwise indicated.

1. Dimension Lumber: Nineteen percent (19%) for more than 2-inch nominal thickness.
2. Timber: Nineteen percent (19%).

C. Engineered Wood Products: Provide engineered wood products acceptable to authorities having jurisdiction and for which current model code research or evaluation reports exist that show compliance with building code in effect for Project.

1. Allowable Design Stresses: Provide engineered wood products with allowable design stresses, as published by manufacturer, that meet or exceed those indicated. Manufacturer's published values shall be determined from empirical data or by rational

engineering analysis and demonstrated by comprehensive testing performed by a qualified independent testing agency.

2.2 WOOD-PRESERVATIVE-TREATED LUMBER

A. Preservative Treatment by Pressure Process: AWPA U1; Use Category UC2 for interior construction not in contact with the ground, Use Category UC3b for exterior construction not in contact with the ground, and Use Category UC4a for items in contact with the ground.

1. Preservative Chemicals: Acceptable to authorities having jurisdiction and containing no arsenic or chromium. Do not use inorganic boron (SBX) for sill plates.

B. Kiln-dry lumber after treatment to a maximum moisture content of fifteen percent (15%). Do not use material that is warped or that does not comply with requirements for untreated material.

C. Mark lumber with treatment quality mark of an inspection agency approved by the ALSC Board of Review.

D. Application: Treat items indicated on Drawings, and the following:

1. Wood cants, nailers, curbs, equipment support bases, blocking, stripping, and similar members in connection with roofing, flashing, vapor barriers, and waterproofing.
2. Wood sills, sleepers, blocking, furring, stripping and similar concealed members in contact with masonry or concrete.
3. Wood framing and furring attached directly to the interior of below-grade exterior masonry or concrete walls.
4. Wood framing members that are less than 18 inches above the ground in crawlspaces or unexcavated areas.
5. Wood floor plates that are installed over concrete slabs-on-grade.

2.3 DIMENSION LUMBER FRAMING

A. Non-Load-Bearing Interior Partitions (Studs, Posts, Etc.): Construction or No. 2 grade and better.

1. Species:

a. Hem-fir (north); NLGA.
b. Douglas fir-larch (north); NLGA.

B. Other Framing Not Listed Above: No. 2 grade.

1. Species:

a. Spruce-pine-fir; NLGA.

C. Exposed Framing: Hand-select material for uniformity of appearance and freedom from characteristics, on exposed surfaces and edges, that would impair finish appearance, including decay, honeycomb, knot-holes, shake, splits, torn grain, and wane.

1. Species and Grade: As indicated above for load-bearing construction of same type.

2.4 ENGINEERED WOOD PRODUCTS

A. Engineered Wood Products, General: Products shall contain no urea formaldehyde.

B. Source Limitations: Obtain each type of engineered wood product from single source from a single manufacturer.

C. Laminated-Veneer Lumber: Structural composite lumber made from wood veneers with grain primarily parallel to member lengths, evaluated and monitored according to ASTM D 5456 and manufactured with an exterior-type adhesive complying with ASTM D 2559.

1. Manufacturers: Subject to compliance with requirements, provide products by one (1) of the following:

   a. Boise Cascade Corporation
   b. Weyerhaeuser Company
   c. Substitutions: Under provisions of Section 012500 “Substitution Procedures”.

2. Extreme Fiber Stress in Bending, Edgewise: 2600 psi for 12-inch nominal depth members.
3. Modulus of Elasticity, Edgewise: 2,000,000 psi.

D. Wood I-Joists: Prefabricated units, I-shaped in cross section, made with solid or structural composite lumber flanges and wood-based structural panel webs, let into and bonded to flanges. Comply with material requirements of and with structural capacities established and monitored according to ASTM D 5055.

1. Manufacturers: Subject to compliance with requirements, provide products by one (1) of the following:

   a. Boise Cascade Company
   b. Weyerhaeuser Company
   c. Substitutions: Under provisions of Section 012500 “Substitution Procedures”.

2. Web Material: Either OSB or plywood, complying with DOC PS 1 or DOC PS 2, Exposure 1.
3. Structural Properties: Depths and design values not less than those indicated.
4. Comply with APA PRI-400. Factory mark I-joists with APA-EWS trademark indicating nominal joist depth, joist class, span ratings, mill identification, and compliance with APA-EWS standard.

E. Rim Boards: Product designed to be used as a load-bearing member and to brace wood I-joists at bearing ends, complying with research or evaluation report for I-joists.

1. Manufacturer: Provide products by same manufacturer as I-joists.
2. Material: Product made from any combination solid lumber, wood strands, and veneers.
3. Thickness: 1¼ inches.
4. Comply with APA PRR-401, rim board grade. Factory mark rim boards with APA-EWS trademark indicating thickness, grade, and compliance with APA-EWS standard.

2.5 MISCELLANEOUS LUMBER

A. General: Provide miscellaneous lumber indicated and lumber for support or attachment of other construction, including the following:

1. Blocking.
2. Nailers.
3. Rooftop equipment bases and support curbs.
4. Grounds.

B. Dimension Lumber Items: Construction or No. 2 grade lumber of any species.

C. Concealed Boards: Northern species; No. 2 Common grade; NLGA.

D. For blocking and nailers used for attachment of other construction, select and cut lumber to eliminate knots and other defects that will interfere with attachment of other work.

2.6 PLYWOOD BACKING PANELS

A. Equipment Backing Panels: DOC PS 1, Exposure 1, C-D Plugged, fire-retardant treated, in thickness indicated or, if not indicated, not less than ¾-inch nominal thickness.

2.7 FASTENERS

A. General: Fasteners shall be of size and type indicated and shall comply with requirements specified in this article for material and manufacture. Provide nails or screws, in sufficient length, to penetrate not less than 1½ inches into wood substrate.

1. Where rough carpentry is exposed to weather, in ground contact, pressure-preservative treated, or in area of high relative humidity, provide fasteners of Type 304 stainless-steel.

B. Nails, Brads, and Staples: ASTM F 1667.

C. Power-Driven Fasteners: Fastener systems with an evaluation report acceptable to authorities having jurisdiction, based on ICC-ES AC70.

D. Wood Screws: ASME B18.6.1.

E. Lag Bolts: ASME B18.2.1

F. Bolts: Steel bolts complying with ASTM A 307, Grade A; with ASTM A 563 hex nuts and, where indicated, flat washers.

G. Post-Installed Anchors: Fastener systems with an evaluation report acceptable to authorities having jurisdiction, based on ICC-ES AC01 or ICC-ES AC193 as appropriate for the substrate.

1. Material: Stainless-steel with bolts and nuts complying with ASTM F 593 and ASTM F 594, Alloy Group 1 or 2.

H. Expansion Anchors: Anchor bolt and sleeve assembly of material indicated below with capability to sustain, without failure, a load equal to six (6) times the load imposed when installed in unit masonry assemblies and equal to four (4) times the load imposed when installed

in concrete as determined by testing per ASTM E 488 conducted by a qualified independent testing and inspecting agency.

1. Material: Carbon-steel components, zinc plated to comply with ASTM B 633, Class Fe/Zn 5.

2.8 METAL FRAMING ANCHORS

A. Basis-of-Design Product: Subject to compliance with requirements, provide product indicated on Drawings or comparable product by one (1) of the following:

1. Cleveland Steel Specialty Co.
2. MiTek Industries, Inc.
3. Simpson Strong-Tie Co., Inc.
4. Substitutions: Under provisions of Section 012500 “Substitution Procedures”.

B. Allowable Design Loads: Provide products with allowable design loads, as published by manufacturer, that meet or exceed those of basis-of-design products. Manufacturer's published values shall be determined from empirical data or by rational engineering analysis and demonstrated by comprehensive testing performed by a qualified independent testing agency. Framing anchors shall be punched for fasteners adequate to withstand same loads as framing anchors.

C. Hot-Dip, Heavy-Galvanized Steel Sheet: ASTM A 653; structural steel (SS), high-strength low-alloy steel Type A (HSLAS Type A), or high-strength low-alloy steel Type B (HSLAS Type B); G185 coating designation; and not less than 0.036-inch-thick.

1. Use for wood-preservative-treated lumber and where indicated.

2.9 MISCELLANEOUS MATERIALS

A. Sill-Sealer Gaskets:

1. Glass-fiber-resilient insulation, fabricated in strip form, for use as a sill sealer; 1-inch nominal thickness, compressible to 1/32-inch; selected from manufacturer's standard widths to suit width of sill members indicated.
2. Closed-cell neoprene foam, ¼-inch-thick, selected from manufacturer's standard widths to suit width of sill members indicated.
3. Self-adhering sheet consisting of 64 mils of rubberized asphalt laminated on one (1) side to a 4-mil-thick, polyethylene-film reinforcement, and with release liner on adhesive side; formulated for application with primer or surface conditioner that complies with VOC limits of authorities having jurisdiction.

PART 3 - EXECUTION

3.1 INSTALLATION, GENERAL

A. Framing Standard: Comply with AF&PA's WCD 1, "Details for Conventional Wood Frame Construction," unless otherwise indicated.

B. Framing with Engineered Wood Products: Install engineered wood products to comply with manufacturer's written instructions.

C. Set rough carpentry to required levels and lines, with members plumb, true to line, cut, and fitted. Fit rough carpentry accurately to other construction; scribe and cope as needed for accurate fit. Locate nailers, blocking, grounds,and similar supports to comply with requirements for attaching other construction.

D. Install plywood backing panels by fastening to studs; coordinate locations with utilities requiring backing panels. Install fire-retardant treated plywood backing panels with classification marking of testing agency exposed to view.

E. Install metal framing anchors to comply with manufacturer's written instructions. Install fasteners through each fastener hole.

F. Install sill sealer gasket to form continuous seal between sill plates and foundation walls.

G. Do not splice structural members between supports unless otherwise indicated.

H. Provide blocking and framing as indicated and as required to support facing materials, fixtures, specialty items, and trim.

I. Sort and select lumber so that natural characteristics will not interfere with installation or with fastening other materials to lumber. Do not use materials with defects that interfere with function of member or pieces that are too small to use with minimum number of joints or optimum joint arrangement.

J. Comply with AWPA M4 for applying field treatment to cut surfaces of preservative-treated lumber.

1. Use copper naphthenate for items not continuously protected from liquid water.

K. Securely attach rough carpentry work to substrate by anchoring and fastening as indicated, complying with the following:

1. Table 2304.9.1, "Fastening Schedule," in ICC's International Building Code (IBC).
2. ICC-ES evaluation report for fastener.

L. Use steel common nails unless otherwise indicated. Select fasteners of size that will not fully penetrate members where opposite side will be exposed to view or will receive finish materials. Make tight connections between members. Install fasteners without splitting wood. Drive nails snug but do not countersink nail heads unless otherwise indicated.

3.2 WOOD BLOCKING AND NAILER INSTALLATION

A. Install where indicated and where required for attaching other work. Form to shapes indicated and cut as required for true line and level of attached work. Coordinate locations with other work involved.

B. Attach items to substrates to support applied loading. Recess bolts and nuts flush with surfaces unless otherwise indicated.

3.4 PROTECTION

A. Protect wood that has been treated with inorganic boron (SBX) from weather. If, despite protection, inorganic boron-treated wood becomes wet, apply EPA-registered borate treatment. Apply borate solution by spraying to comply with EPA-registered label.

B. Protect rough carpentry from weather. If, despite protection, rough carpentry becomes wet enough that moisture content exceeds that specified, apply EPA-registered borate treatment. Apply borate solution by spraying to comply with EPA-registered label.

END OF SECTION 061000

SECTION 061600 - SHEATHING

PART 1 - GENERAL

1.1 RELATED DOCUMENTS

A. Drawings and general provisions of the Contract, including General and Supplementary Conditions and Division 01 Specification Sections, apply to this Section.

1.2 SUMMARY

A. Section Includes:

1. Wall sheathing.
2. Roof sheathing.
3. Subflooring.

B. Related Requirements:

1. Section 012300 “Alternates” for Work of this Section included in alternates.
2. Section 061000 "Rough Carpentry" for plywood backing panels.
3. Section 072500 "Weather Barriers" for air and vapor barrier applied over wall sheathing.
4. Section 072726 "Fluid-Applied Membrane Air Barriers" for air and vapor barrier applied over wall sheathing.

1.3 ACTION SUBMITTALS

A. Product Data: For each type of process and factory-fabricated product. Indicate component materials and dimensions and include construction and application details.

1. Include data for wood-preservative treatment from chemical treatment manufacturer and certification by treating plant that treated plywood complies with requirements. Indicate type of preservative used and net amount of preservative retained.

1.4 INFORMATIONAL SUBMITTALS

A. Qualification Data: For Installer.

B. Evaluation Reports: For following products, from ICC-ES:

1. Wood-preservative-treated plywood.

1.5 DELIVERY, STORAGE, AND HANDLING

A. Stack panels flat with spacers beneath and between each bundle to provide air circulation. Protect sheathing from weather by covering with waterproof sheeting, securely anchored. Provide for air circulation around stacks and under coverings.

PART 2 - PRODUCTS

2.1 WOOD PANEL PRODUCTS

A. Thickness: As needed to comply with requirements specified, but not less than thickness indicated.

B. Factory mark panels to indicate compliance with applicable standard.

2.2 PRESERVATIVE-TREATED PLYWOOD

A. Preservative Treatment by Pressure Process: AWPA U1; Use Category UC2 for interior construction not in contact with ground, Use Category UC3b for exterior construction not in contact with ground, and Use Category UC4a for items in contact with ground.

1. Preservative Chemicals: Acceptable to authorities having jurisdiction and containing no arsenic or chromium.

B. Mark plywood with appropriate classification marking of an inspection agency acceptable to authorities having jurisdiction.

C. Application: Treat items indicated on Drawings and plywood in contact with masonry or concrete or used with roofing, flashing, vapor barriers, and waterproofing.

2.3 WALL SHEATHING

A. Plywood Sheathing: DOC PS 1, C-D Grade, Exposure 1 sheathing.

1. Nominal Thickness: Not less than ½-inch unless otherwise indicated.

2.4 ROOF SHEATHING

A. Plywood Roof Sheathing: DOC PS 1, Exposure 1 sheathing.

1. Nominal Thickness: Not less than 5/8-inch unless otherwise indicated.

2.5 COMPOSITE NAIL BASE INSULATED ROOF SHEATHING

A. Vented, Plywood-Surfaced, Polyisocyanurate-Foam Sheathing: ASTM C 1289, with DOC PS 2, Exposure 1 plywood adhered to spacers on one (1) face.

1. Manufacturers:

a. Atlas Roofing Corporation
b. Hunter Panels
c. Johns Manville; a Berkshire Hathaway company
d. Substitutions: Under provisions of Section 012500 “Substitution Procedures”.

2. Polyisocyanurate-Foam Thickness: 4½ inches.
3. Plywood Nominal Thickness: 5/8-inch.
4. Spacers: Wood furring strips or blocks not less than 1-inch-thick and spaced not more than 12 inches o.c.

2.6 SUBFLOORING AND UNDERLAYMENT

A. Plywood Subflooring: Exposure 1, Structural I single-floor, tongue and groove panels or sheathing.

1. Nominal Thickness: ¾-inch unless otherwise indicated.

2.7 FASTENERS

A. General: Provide fasteners of size and type indicated that comply with requirements specified in this article for material and manufacture.

1. For roof and wall sheathing, provide fasteners of Type 304 stainless-steel.

B. Nails, Brads, and Staples: ASTM F 1667.

C. Power-Driven Fasteners: Fastener systems with an evaluation report acceptable to authorities having jurisdiction, based on ICC-ES AC70.

D. Screws for Fastening Wood Structural Panels to Cold-Formed Metal Framing: ASTM C 954, except with wafer heads and reamer wings, length as recommended by screw manufacturer for material being fastened.

PART 3 - EXECUTION

3.1 INSTALLATION, GENERAL

A. Do not use materials with defects that impair quality of sheathing or pieces that are too small to use with minimum number of joints or optimum joint arrangement. Arrange joints so that pieces do not span between fewer than three support members.

B. Cut panels at penetrations, edges, and other obstructions of work; fit tightly against abutting construction unless otherwise indicated.

C. Securely attach to substrate by fastening as indicated, complying with the following:

1. Table 2304.9.1, "Fastening Schedule," in the ICC's International Building Code.
2. ICC-ES evaluation report for fastener.

D. Use common wire nails unless otherwise indicated. Select fasteners of size that will not fully penetrate members where opposite side will be exposed to view or will receive finish materials. Make tight connections. Install fasteners without splitting wood.

E. Coordinate roof and wall sheathing installation with flashing and joint-sealant installation so these materials are installed in sequence and manner that prevent exterior moisture from passing through completed assembly.

F. Do not bridge building expansion joints; cut and space edges of panels to match spacing of structural support elements.

G. Coordinate sheathing installation with installation of materials installed over sheathing so sheathing is not exposed to precipitation or left exposed at end of the workday when rain is forecast.

3.2 WOOD STRUCTURAL PANEL INSTALLATION

A. General: Comply with applicable recommendations in APA Form No. E30, "Engineered Wood Construction Guide," for types of structural-use panels and applications indicated.

B. Fastening Methods: Fasten panels as indicated below:

1. Subflooring:

a. Glue and screw to wood framing.
b. Space panels 1/8-inch apart at edges and ends.

2. Roof and Wall Sheathing:

a. Screw to cold-formed metal framing.
b. Space panels 1/8-inch apart at edges and ends.

END OF SECTION 061600

SECTION 061753 - SHOP-FABRICATED WOOD TRUSSES

PART 1 - GENERAL

1.1 SUMMARY

A. Section Includes:

1. Wood roof trusses.

1.2 ACTION SUBMITTALS

A. Product Data: For metal-plate connectors, metal truss accessories, and fasteners.

B. Shop Drawings: Show fabrication and installation details for trusses.

1. Show location, pitch, span, camber, configuration, and spacing for each type of truss required.
2. Indicate sizes, stress grades, and species of lumber.
3. Indicate locations of permanent bracing required to prevent buckling of individual truss members due to design loads.
4. Indicate locations, sizes, and materials for permanent bracing required to prevent buckling of individual truss members due to design loads.
5. Indicate type, size, material, finish, design values, orientation, and location of metal connector plates.
6. Show splice details and bearing details.

C. Delegated-Design Submittal: For metal-plate-connected wood trusses indicated to comply with performance requirements and design criteria, including analysis data signed and sealed by the qualified professional engineer responsible for their preparation.

1.3 INFORMATIONAL SUBMITTALS

A. Product Certificates: For metal-plate-connected wood trusses, signed by officer of truss-fabricating firm.

B. Evaluation Reports: For the following, from ICC-ES:

1. Metal-plate connectors.
2. Metal truss accessories.

1.4 QUALITY ASSURANCE

A. Metal Connector-Plate Manufacturer Qualifications: A manufacturer that is a member of TPI and that complies with quality-control procedures in TPI 1 for manufacture of connector plates.

1. Manufacturer's responsibilities include providing professional engineering services needed to assume engineering responsibility.
2. Engineering Responsibility: Preparation of Shop Drawings and comprehensive engineering analysis by a qualified professional engineer.

B. Fabricator Qualifications: Shop that participates in a recognized quality-assurance program, complies with quality-control procedures in TPI 1, and involves third-party inspection by an independent testing and inspecting agency acceptable to Architect and authorities having jurisdiction and is certified for chain of custody by an FSC-accredited certification body.

1.5 DELIVERY, STORAGE, AND HANDLING

A. Handle and store trusses to comply with recommendations in SBCA BCSI, "Building Component Safety Information: Guide to Good Practice for Handling, Installing, Restraining, & Bracing Metal Plate Connected Wood Trusses."

PART 2 - PRODUCTS

2.1 PERFORMANCE REQUIREMENTS

A. Delegated Design: Engage a qualified professional engineer, as defined in Section 014000 "Quality Requirements," to design metal-plate-connected wood trusses.

B. Structural Performance: Metal-plate-connected wood trusses shall be capable of withstanding design loads within limits and under conditions indicated. Comply with requirements in TPI 1.

C. Comply with applicable requirements and recommendations of TPI 1, TPI DSB, and SBCA BCSI.

D. Wood Structural Design Standard: Comply with applicable requirements in AF&PA's "National Design Specifications for Wood Construction" and its "Supplement."

2.2 DIMENSION LUMBER

A. Lumber: DOC PS 20 and applicable rules of any rules-writing agency certified by the American Lumber Standard Committee (ALSC) Board of Review. Provide lumber graded by an agency certified by the ALSC Board of Review to inspect and grade lumber under the rules indicated.

1. Provide dry lumber with fifteen percent (15%) maximum moisture content at time of dressing.

B. Permanent Bracing: Provide wood bracing that complies with requirements for miscellaneous lumber in Section 061000 "Rough Carpentry."

2.3 METAL CONNECTOR PLATES

A. Manufacturers: Subject to compliance with requirements, provide products by one (1) of the following:

1. Alpine Engineered Products, Inc.; a division of ITW Building Components Group, Inc.
2. MiTek Industries, Inc.

B. Fabricate connector plates to comply with TPI 1.

C. Hot-Dip Galvanized-Steel Sheet: ASTM A 653; Structural Steel (SS), high-strength low-alloy steel Type A (HSLAS Type A), or high-strength low-alloy steel Type B (HSLAS Type B); G60 coating designation; and not less than 0.036-inch-thick.

2.4 FASTENERS

A. Provide fasteners of size and type indicated that comply with requirements specified in this article for material and manufacture.

1. Provide fasteners for use with metal framing anchors that comply with written recommendations of metal framing manufacturer.
2. Where trusses are exposed to weather, in ground contact, or in area of high relative humidity, provide fasteners with hot-dip zinc coating complying with ASTM A 153.

B. Nails, Brads, and Staples: ASTM F 1667.

2.5 METAL FRAMING ANCHORS AND ACCESSORIES

A. Manufacturers: Subject to compliance with requirements, provide products by one (1) of the following:

1. Cleveland Steel Specialty Co.
2. Simpson Strong-Tie Co., Inc.

B. Allowable design loads, as published by manufacturer, shall comply with or exceed those indicated. Manufacturer's published values shall be determined from empirical data or by rational engineering analysis and demonstrated by comprehensive testing performed by a qualified independent testing agency. Framing anchors shall be punched for fasteners adequate to withstand same loads as framing anchors.

C. Galvanized-Steel Sheet: Hot-dip, zinc-coated steel sheet complying with ASTM A 653, G60 coating designation.

2.6 FABRICATION

A. Assemble truss members in design configuration indicated; use jigs or other means to ensure uniformity and accuracy of assembly, with joints closely fitted to comply with tolerances in TPI 1. Position members to produce design camber indicated.

1. Fabricate wood trusses within manufacturing tolerances in TPI 1.

B. Connect truss members by metal connector plates located and securely embedded simultaneously in both sides of wood members by air or hydraulic press.

PART 3 - EXECUTION

3.1 INSTALLATION

A. Install wood trusses only after supporting construction is in place and is braced and secured.

B. If trusses are delivered to Project site in more than one (1) piece, assemble trusses before installing.

C. Hoist trusses in place by lifting equipment suited to sizes and types of trusses required, exercising care not to damage truss members or joints by out-of-plane bending or other causes.

D. Install and brace trusses according to TPI recommendations and as indicated.

E. Anchor trusses securely at bearing points; use metal truss tie-downs or floor truss hangers as applicable. Install fasteners through each fastener hole in metal framing anchors according to manufacturer's fastening schedules and written instructions.

F. Securely connect each truss ply required for forming built-up girder trusses.

G. Install and fasten permanent bracing during truss erection and before construction loads are applied. Anchor ends of permanent bracing where terminating at walls or beams.

1. Install bracing to comply with Section 061000 "Rough Carpentry."
2. Install and fasten strongback bracing vertically against vertical web of parallel-chord floor trusses at centers indicated.

H. Install wood trusses within installation tolerances in TPI 1.

I. Do not alter trusses in field. Do not cut, drill, notch, or remove truss members.

J. Replace wood trusses that are damaged or do not comply with requirements.

END OF SECTION 061753

SECTION 062013 - EXTERIOR FINISH CARPENTRY

PART 1 - GENERAL

1.1 RELATED DOCUMENTS

A. Drawings and general provisions of the Contract, including General and Supplementary Conditions and Division 01 Specification Sections, apply to this Section.

1.2 SUMMARY

A. Section Includes:

1. Exterior foam plastic louvers, brackets, etc. (composite).
2. Lumber soffits.

B. Related Requirements:

1. Section 061000 "Rough Carpentry" for furring, blocking, and other carpentry work not exposed to view.

1.3 ACTION SUBMITTALS

A. Product Data: For each type of process and factory-fabricated product. Indicate component materials, dimensions, profiles, textures, and colors and include construction and application details.

1. Include data on products, including manufacturer’s specification product sheet.

B. Submit shop drawings for products indicating dimensions, adjacent construction, materials, thicknesses, fabrication details, required clearances, field jointing, tolerances, colors, finishes, methods of support, and anchorages.

C. Samples: For each type of product involving selection of colors, profiles, or textures.

1.4 INFORMATIONAL SUBMITTALS

A. Compliance Certificates:

1. For lumber that is not marked with grade stamp.

B. Evaluation Reports: For the following, from ICC-ES:

1. Foam plastic moldings.

1.5 QUALITY ASSURANCE

A. Manufacturer Qualifications: Company specializing in manufacturing products specified in this section with a minimum five (5) years documented experience.

B. Installer Qualifications: Company specializing in performing Work of this section with minimum two (2) years documented experience with projects of similar scope and complexity.

1.6 DELIVERY, STORAGE, AND HANDLING

A. Stack lumber, plywood, and other panels flat with spacers between each bundle to provide air circulation.

1. Protect materials from weather by covering with waterproof sheeting, securely anchored.
2. Provide for air circulation around stacks and under coverings.

B. Store and handle in strict compliance with manufacturer's written instructions and recommendations.

1.7 FIELD CONDITIONS

A. Weather Limitations: Proceed with installation only when existing and forecast weather conditions permit work to be performed and at least one (1) coat of specified finish can be applied without exposure to rain, snow, or dampness.

B. Do not install finish carpentry materials that are wet, moisture damaged, or mold damaged.

1. Indications that materials are wet or moisture damaged include, but are not limited to, discoloration, sagging, or irregular shape.
2. Indications that materials are mold damaged include, but are not limited to, fuzzy or splotchy surface contamination and discoloration.

PART 2 - PRODUCTS

2.1 MATERIALS, GENERAL

A. Lumber: DOC PS 20 and applicable rules of grading agencies indicated. If no grading agency is indicated, comply with applicable rules of any rules-writing agency certified by the American Lumber Standard Committee's (ALSC) Board of Review. Grade lumber by an agency certified by the ALSC's Board of Review to inspect and grade lumber under the rules indicated.

1. Factory mark each piece of lumber with grade stamp of inspection agency, indicating grade, species, moisture content at time of surfacing, and mill.
2. For exposed lumber, mark grade stamp on end or back of each piece or omit grade stamp and provide certificates of grade compliance issued by inspection agency.

2.2 EXTERIOR TRIM

A. Foam Plastic Moldings: Molded product of shapes indicated, recommended by manufacturer for exterior use, with a tough outer skin on exposed surfaces; factory primed. Exposed surfaces shall not be shaped after molding.

1. Products: Subject to compliance with requirements, available products that may be incorporated into the Work include, but are not limited to, the following:

a. Fypon Ltd.

b. Focal Point Architectural Products
c. Melton Classica Incorporated
d. Substitutions: Under provisions of Section 012500 “Substitution Procedures”.

2. Density: Not less than 20 lb/cu. ft.
3. Flame-Spread Index: Not more than 75 when tested according to ASTM E 84.
4. Size and profile as indicate on Drawings.
5. Shop Finish: White.

2.3 LUMBER SOFFITS

A. Provide kiln-dried lumber siding complying with DOC PS 20.

B. Species and Grade:

1. Western red cedar; NLGA, WCLIB, or WWPA Grade A.

C. Pattern:

1. Flush joint, tongue and groove, actual face width (coverage) and thickness of 3-1/8-by-11/16-inch.

2.4 MISCELLANEOUS MATERIALS

A. Fasteners for Exterior Finish Carpentry: Provide nails or screws, in sufficient length to penetrate not less than 1½ inches into substrate. Staples, small brads, and wire nails are not acceptable.

1. For applications not otherwise indicated, provide stainless-steel fasteners.

B. Wood Glue: Waterproof resorcinol glue recommended by manufacturer for exterior carpentry use.

C. Flashing: Comply with requirements in Section 076200 "Sheet Metal Flashing and Trim" for flashing materials installed in exterior finish carpentry.

D. Insect Screening for Soffit Vents and Louvers: Stainless-steel, 18-by-18-inch mesh.

E. Continuous Soffit Vents: Aluminum hat channel shape with perforations, 2 inches wide and in lengths not less than 96 inches.

1. Finish: As selected by Architect and Owner from manufacturer’s full range <u>to match adjacent finishes</u>.

F. Sealants: Latex, complying with ASTM C 834 Type OP, Grade NF and with applicable requirements in Section 079200 "Joint Sealants," recommended by sealant manufacturer and manufacturer of substrates for intended application.

1. Products: Subject to compliance with requirements, available products that may be incorporated into the Work include, but are not limited to, the following:

a. BASF Building Systems; **Sonolac**
b. Bostik, Inc.; **Chem-Calk 600**

c. Pecora Corporation; **AC-20+**
d. Tremco Incorporated; **Tremflex 834**
e. Substitutions: Under provisions of Section 012500 “Substitution Procedures”.

2.5 FINISH

A. Composite products do not require paint for protection, but shall be painted to achieve a custom color.

B. Finish in accordance with Section 099113 “Exterior Painting” and manufacturer's recommendations.

PART 3 - EXECUTION

3.1 EXAMINATION

A. Examine substrates, with Installer present, for compliance with requirements for installation tolerances and other conditions affecting performance.

B. Examine finish carpentry materials before installation. Reject materials that are wet, moisture damaged, and mold damaged.

C. Proceed with installation only after unsatisfactory conditions have been corrected.

3.2 PREPARATION

A. Clean substrates of projections and substances detrimental to application.

B. Prime moldings to be painted, including both faces and edges, unless factory primed.

1. Cut to required lengths and prime ends.
2. Comply with requirements in Section 099113 "Exterior Painting."

3.3 INSTALLATION, GENERAL

A. Do not use materials that are unsound, warped, improperly treated or finished, inadequately seasoned, or too small to fabricate with proper jointing arrangements.

1. Do not use manufactured units with defective surfaces, sizes, or patterns.

B. Install exterior finish carpentry level, plumb, true, and aligned with adjacent materials.

1. Use concealed shims where necessary for alignment.
2. Scribe and cut exterior finish carpentry to fit adjoining work.
3. Refinish and seal cuts as recommended by manufacturer.
4. Install to tolerance of 1/8-inch in 96 inches for level and plumb. Install adjoining exterior finish carpentry with 1/32-inch maximum offset for flush installation and 1/16-inch maximum offset for reveal installation.
5. Coordinate exterior finish carpentry with materials and systems in or adjacent to it.
6. Provide cutouts for mechanical and electrical items that penetrate exterior finish carpentry.

3.4 STANDING AND RUNNING TRIM INSTALLATION

A. Install foam plastic moldings to comply with manufacturer's written instructions.

B. Fit exterior joints to exclude water.

1. Cope at returns and miter at corners to produce tight-fitting joints with full-surface contact throughout length of joint.
2. Plane backs of casings to provide uniform thickness across joints, where necessary for alignment.

C. Where face fastening is unavoidable, countersink fasteners, fill surface flush (prefabricated plugs), and sand unless otherwise indicated.

3.5 ADJUSTING

A. Replace exterior finish carpentry that is damaged or does not comply with requirements.

1. Exterior finish carpentry may be repaired or refinished if work complies with requirements and shows no evidence of repair or refinishing.

B. Adjust joinery for uniform appearance.

3.6 CLEANING

A. Clean exterior finish carpentry on exposed and semi-exposed surfaces.

B. Touch up factory-applied finishes to restore damaged or soiled areas.

3.7 PROTECTION

A. Protect installed products from damage from weather and other causes during construction.

B. Remove and replace finish carpentry materials that are wet, moisture damaged, and mold damaged.

1. Indications that materials are wet or moisture damaged include, but are not limited to, discoloration, sagging, or irregular shape.
2. Indications that materials are mold damaged include, but are not limited to, fuzzy or splotchy surface contamination and discoloration.

END OF SECTION 062013

SECTION 062023 - INTERIOR FINISH CARPENTRY

PART 1 - GENERAL

1.1 RELATED DOCUMENTS

A. Drawings and general provisions of the Contract, including General and Supplementary Conditions and Division 01 Specification Sections, apply to this Section.

1.2 SUMMARY

A. Section Includes:

1. Shelving.
2. Ballet barre.

B. Related Requirements:

1. Section 061000 "Rough Carpentry" for furring, blocking, and other carpentry work not exposed to view.
2. Section 099300 “Staining and Transparent Finishing” for staining and finishing of interior finish carpentry.

1.3 COORDINATION

A. Coordinate sizes and locations of framing, blocking, furring, reinforcements, and other related units of Work specified in other Sections to ensure that interior woodwork can be supported and installed as indicated.

1.4 ACTION SUBMITTALS

A. Product Data: For each type of process and factory-fabricated product. Indicate component materials, dimensions, profiles, textures, and colors and include construction and application details.

B. Shop Drawings:

1. Include plans, elevations, sections, and attachment details.
2. Show large-scale details.
3. Show locations and sizes of furring, blocking, and hanging strips, including blocking and reinforcement concealed by construction and specified in other Sections.

1.5 INFORMATIONAL SUBMITTALS

A. Qualification Data: For fabricator.

1.6 QUALITY ASSURANCE

A. Fabricator Qualifications: Shop that employs skilled workers who custom fabricate products similar to those required for this Project and whose products have a record of successful in-service performance.

1.7 DELIVERY, STORAGE, AND HANDLING

A. Stack lumber, plywood, and other panels flat with spacers between each bundle to provide air circulation.

1. Protect materials from weather by covering with waterproof sheeting, securely anchored.
2. Provide for air circulation around stacks and under coverings.

B. Deliver interior finish carpentry materials only when environmental conditions meet requirements specified for installation areas. If interior finish carpentry materials must be stored in other than installation areas, store only where environmental conditions comply with requirements specified for installation areas.

1.8 FIELD CONDITIONS

A. Environmental Limitations: Do not deliver or install interior finish carpentry materials until building is enclosed and weatherproof, wet work in space is completed and nominally dry, and HVAC system is operating and maintaining temperature and relative humidity at occupancy levels during the remainder of the construction period.

B. Do not install finish carpentry materials that are wet, moisture damaged, or mold damaged.

1. Indications that materials are wet or moisture damaged include, but are not limited to, discoloration, sagging, or irregular shape.
2. Indications that materials are mold damaged include, but are not limited to, fuzzy or splotchy surface contamination and discoloration.

PART 2 - PRODUCTS

2.1 MATERIALS, GENERAL

A. Lumber: DOC PS 20 and applicable rules of grading agencies indicated. If no grading agency is indicated, comply with applicable rules of any rules-writing agency certified by the American Lumber Standard Committee's (ALSC) Board of Review. Grade lumber by an agency certified by the ALSC's Board of Review to inspect and grade lumber under the rules indicated.

1. Factory mark each piece of lumber with grade stamp of grading agency.
2. For exposed lumber, mark grade stamp on end or back of each piece or omit grade stamp and provide certificates of grade compliance issued by inspection agency.

2.2 SHELVING AND CLOTHES RODS

A. Exposed Shelving: Made from the following material, ¾-inch-thick:

1. Softwood Boards:

a. Kiln-Dried Douglas fir-larch, Douglas fir south, or hem-fir; SPIB Superior or C & Btr finish; NLGA, WCLIB, or WWPA; or southern pine; B & B finish.

B. Standards for Adjustable Shelf Brackets: BHMA A156.9, B04102; zinc-plated steel.

C. Adjustable Shelf Brackets: BHMA A156.9, B04112; zinc-plated steel.

2.3 BALLET BARRE

A. Manufacturers:

1. Ballet Barres, Inc.
2. Custom Barres, LLC
3. Dance Equipment International
4. Vita, Inc.
5. Substitutions: Under provisions of Section 012500 "Substitution Procedures".

B. Barre: 1¾-inch diameter poplar wood, hand-sanded, unfinished; pre-drilled for brackets.

C. Brackets: Fixed chrome, 1 pound; includes No. 10 by 2-inch flat head screws. Bracket quantity and spacing is based on length of barre.

1. Maximum span between brackets is 80 inches with minimum overhang of 2 inches, maximum of 20 inches.

2.4 MISCELLANEOUS MATERIALS

A. Fasteners for Interior Finish Carpentry: Nails, screws, and other anchoring devices of type, size, material, and finish required for application indicated to provide secure attachment, concealed where possible.

1. For applications not otherwise indicated, provide stainless-steel fasteners.

2.5 FABRICATION

A. Ease edges of lumber less than 1-inch in nominal thickness to 1/16-inch radius and edges of lumber 1-inch or more in nominal thickness to 1/8-inch radius.

PART 3 - EXECUTION

3.1 EXAMINATION

A. Examine substrates, with Installer present, for compliance with requirements for installation tolerances and other conditions affecting performance.

B. Examine finish carpentry materials before installation. Reject materials that are wet, moisture damaged, and mold damaged.

C. Proceed with installation only after unsatisfactory conditions have been corrected.

3.2 PREPARATION

A. Clean substrates of projections and substances detrimental to application.

B. Before installing interior finish carpentry, condition materials to average prevailing humidity in installation areas for a minimum of 24 hours.

3.3 INSTALLATION, GENERAL

A. Do not use materials that are unsound, warped, improperly treated or finished, inadequately seasoned, too small to fabricate with proper jointing arrangements, or with defective surfaces, sizes, or patterns.

B. Install interior finish carpentry level, plumb, true, and aligned with adjacent materials.

1. Use concealed shims where necessary for alignment.
2. Scribe and cut interior finish carpentry to fit adjoining work. Refinish and seal cuts as recommended by manufacturer.
3. Where face fastening is unavoidable, countersink fasteners, fill surface flush, and sand unless otherwise indicated.
4. Install to tolerance of 1/8-inch in 96 inches for level and plumb. Install adjoining interior finish carpentry with 1/32-inch maximum offset for flush installation and 1/16-inch maximum offset for reveal installation.
5. Coordinate interior finish carpentry with materials and systems in or adjacent to it. Provide cutouts for mechanical and electrical items that penetrate interior finish carpentry.

3.4 INSTALLATION OF SHELVING AND CLOTHES RODS

A. Install standards for adjustable shelf brackets according to manufacturer's written instructions, spaced not more than 36 inches o.c. and within 6 inches of ends of shelves. Fasten to framing members, blocking, or metal backing, or use toggle bolts or hollow wall anchors.

B. Cut shelves to neatly fit openings with only enough gap to allow shelves to be removed and reinstalled.

1. Install shelves, fully seated on cleats, brackets, and supports.

3.5 BALLET BARRE

A. Ballet barre and brackets to be installed per manufacturer’s written recommendations.

3.6 ADJUSTING

A. Replace interior finish carpentry that is damaged or does not comply with requirements.

1. Interior finish carpentry may be repaired or refinished if work complies with requirements and shows no evidence of repair or refinishing.

B. Adjust joinery for uniform appearance.

3.7 CLEANING

A. Clean interior finish carpentry on exposed and semi-exposed surfaces.

B. Restore damaged or soiled areas and touch up factory-applied finishes, if any.

3.8 PROTECTION

A. Protect installed products from damage from weather and other causes during construction.

B. Remove and replace finish carpentry materials that are wet, moisture damaged, and mold damaged.

1. Indications that materials are wet or moisture damaged include, but are not limited to, discoloration, sagging, or irregular shape.
2. Indications that materials are mold damaged include, but are not limited to, fuzzy or splotchy surface contamination and discoloration.

END OF SECTION 062023

SECTION 064023 - INTERIOR ARCHITECTURAL WOODWORK

PART 1 - GENERAL

1.1 RELATED DOCUMENTS

A. Drawings and general provisions of the Contract, including General and Supplementary Conditions and Division 01 Specification Sections, apply to this Section.

1.2 SUMMARY

A. Section Includes:

1. Interior wainscot panels, base, casing, sills, aprons, moldings, shelving, woodwork, etc.
2. Wood cabinets and doors.
3. Closet shelving and rods.
4. Shop priming.

B. Related Requirements:

1. Section 012300 “Alternates” for work of this Section included in alternates.
2. Section 061000 "Rough Carpentry" for wood furring, blocking, shims, and hanging strips required for installing interior architectural woodwork that are concealed within other construction before interior architectural woodwork installation.
3. Section 062023 "Interior Finish Carpentry" for interior carpentry exposed to view that is not specified in this Section.

1.3 COORDINATION

A. Coordinate sizes and locations of framing, blocking, furring, reinforcements, and other related units of Work specified in other Sections to ensure that interior architectural woodwork can be supported and installed as indicated.

1.4 ACTION SUBMITTALS

A. Product Data: For each type of product.

1. Anchors.
2. Adhesives.

B. Waterborne Treatments: For products receiving a waterborne treatment, include statement that moisture content of treated materials was reduced to levels specified before shipment to Project site.

C. Shop Drawings:

1. Include dimensioned plans, elevations, sections, and attachment details.
2. Show large-scale details.
3. Show locations and sizes of furring, blocking, and hanging strips, including blocking and reinforcement concealed by construction and specified in other Sections.

1.5 INFORMATIONAL SUBMITTALS

A. Qualification Data: For fabricator.

B. Product Certificates: For the following:

1. Adhesives.

1.6 QUALITY ASSURANCE

A. Fabricator Qualifications: Shop that employs skilled workers who custom fabricate products similar to those required for this Project and whose products have a record of successful in-service performance.

1.7 DELIVERY, STORAGE, AND HANDLING

A. Comply with the Architectural Woodwork Standards, Section 2.

B. Do not deliver interior architectural woodwork until painting and similar finish operations that might damage woodwork have been completed in installation areas.

C. Store woodwork in installation areas or in areas where environmental conditions comply with requirements specified in "Field Conditions" Article.

1.8 FIELD CONDITIONS

A. Environmental Limitations with Humidity Control: Do not deliver or install interior architectural woodwork until building is enclosed, wet-work is complete, and HVAC system is operating and maintaining temperature between 60 and 90 deg F (16 and 32 deg C) and relative humidity between twenty-five and fifty-five percent (25-55%) during the remainder of the construction period.

B. Field Measurements: Where interior architectural woodwork is indicated to fit to other construction, verify dimensions of other construction by field measurements before fabrication, and indicate measurements on Shop Drawings. Coordinate fabrication schedule with construction progress to avoid delaying the Work.

1. Locate concealed framing, blocking, and reinforcements that support woodwork by field measurements before being concealed by construction, and indicate measurements on Shop Drawings.

PART 2 - PRODUCTS

2.1 WOODWORK, GENERAL

A. Quality Standard: Unless otherwise indicated, comply with the "Architectural Woodwork Standards" for grades of interior architectural woodwork indicated for construction, finishes, installation, and other requirements.

2.2 INTERIOR WOODWORK AND TRIM FOR OPAQUE FINISH

A. Architectural Woodwork Standards Grade: Custom.

1. Wood Species: Any closed-grain hardwood.
2. Wood Moisture Content: Five to ten percent (5-10%).

2.3 CLOSET SHELVING

A. Architectural Woodwork Standards Grade: Custom.

B. Shelf Material: ¾-inch solid lumber.

C. Cleats: ¾-inch solid lumber.

D. Wood Species: Any closed-grain hardwood.

E. Metal Closet Rods: 1-5/16-inch-diameter, chrome-plated-steel tubes complying with BHMA A156.16, L03131.

F. Metal Rod Flanges: Chrome-plated steel.

2.4 CABINET HARDWARE AND ACCESSORIES

A. Comply with requirements in Section 064113 “Wood-Veneer-Faced Architectural Cabinets”.

2.5 MISCELLANEOUS MATERIALS

A. Furring, Blocking, Shims, and Nailers: Softwood or hardwood lumber, kiln-dried to less than fifteen percent (15%) moisture content.

B. Provide self-drilling screws for metal-framing supports, as recommended by metal-framing manufacturer.

C. Anchors: Select material, type, size, and finish required for each substrate for secure anchorage.

1. Provide metal expansion sleeves or expansion bolts for post-installed anchors.
2. Use nonferrous-metal or hot-dip galvanized anchors and inserts at inside face of exterior walls and at floors.

D. Installation Adhesive: Product recommended by fabricator for each substrate for secure anchorage.

1. Installation adhesives shall comply with the following limits for VOC content when calculated according to 40 CFR 59, Subpart D (EPA Method 24):

a. Wood Glues: 30 g/L.
b. Multipurpose Construction Adhesives: 70 g/L.

2. Adhesives shall not contain urea formaldehyde.

2.6 FABRICATION

A. Fabricate interior architectural woodwork to dimensions, profiles, and details indicated.

1. Ease edges to radius indicated for the following:

a. Edges of Solid-Wood (Lumber) Members: 1/16-inch unless otherwise indicated.
b. Edges of Rails and Similar Members More Than ¾-Inch-Thick: 1/8-inch.

B. Complete fabrication, including assembly, to maximum extent possible before shipment to Project site.

1. Disassemble components only as necessary for shipment and installation.
2. Where necessary for fitting at site, provide allowance for scribing, trimming, and fitting.
3. Trial fit assemblies at fabrication shop that cannot be shipped completely assembled. Install dowels, screws, bolted connectors, and other fastening devices that can be removed after trial fitting. Verify that various parts fit as intended and check measurements of assemblies against field measurements indicated on Shop Drawings before disassembling for shipment.

2.7 SHOP PRIMING

A. Preparations for Finishing: Comply with the Architectural Woodwork Standards for sanding, filling countersunk fasteners, sealing concealed surfaces, and similar preparations for finishing interior architectural woodwork, as applicable to each unit of work.

B. Interior Architectural Woodwork for Opaque Finish: Shop prime with one (1) coat of wood primer as specified in Section 099123 "Interior Painting."

1. Backpriming: Apply one (1) coat of primer, compatible with finish coats, to concealed surfaces of woodwork. Apply two (2) coats to surfaces installed in contact with concrete or masonry and to end-grain surfaces.

PART 3 - EXECUTION

3.1 PREPARATION

A. Before installation, condition interior architectural woodwork to humidity conditions in installation areas for not less than 72 hours prior to beginning of installation.

B. Before installing interior architectural woodwork, examine shop-fabricated work for completion and complete work as required, including removal of packing and backpriming of concealed surfaces.

3.2 INSTALLATION

A. Grade: Install interior architectural woodwork to comply with same grade as item to be installed.

B. Assemble interior architectural woodwork and complete fabrication at Project site to the extent that it was not completed in the shop.

C. Install interior architectural woodwork level, plumb, true in line, and without distortion.

1. Shim as required with concealed shims.
2. Install level and plumb to a tolerance of 1/8-inch in 96 inches.

D. Scribe and cut interior architectural woodwork to fit adjoining work, refinish cut surfaces, and repair damaged finish at cuts.

E. Anchor interior architectural woodwork to anchors or blocking built in or directly attached to substrates.

1. Secure with countersunk, concealed fasteners and blind nailing.
2. Use fine finishing nails or finishing screws for exposed fastening, countersunk and filled flush with interior architectural woodwork.

F. Cabinets: Install without distortion so doors and drawers fit openings properly and are accurately aligned. Adjust hardware to center doors and drawers in openings and to provide unencumbered operation. Complete installation of hardware and accessory items as indicated.

1. Install cabinets with no more than 1/8-inch in 96-inch sag, bow, or other variation from a straight line.
2. Fasten wall cabinets through back, near top and bottom, at ends and not more than 16 inches o.c. with No. 10 wafer-head sheet metal screws through metal backing or metal framing behind wall finish.

3.3 REPAIR

A. Repair damaged and defective interior architectural woodwork, where possible, to eliminate functional and visual defects and to result in interior architectural woodwork being in compliance with requirements of Architectural Woodwork Standards for the specified grade.

B. Where not possible to repair, replace defective woodwork.

C. Field Finish: See Section 099123 "Interior Painting" for final finishing of installed interior architectural woodwork not indicated to be shop finished.

3.4 CLEANING

A. Clean interior architectural woodwork on exposed and semi-exposed surfaces.

B. Clean, lubricate, and adjust hardware.

END OF SECTION 064023

SECTION 064113 - WOOD-VENEER-FACED ARCHITECTURAL CABINETS

PART 1 - GENERAL

1.1 RELATED DOCUMENTS

A. Drawings and general provisions of the Contract, including General and Supplementary Conditions and Division 01 Specification Sections, apply to this Section.

1.2 SUMMARY

A. Section Includes:

1. Architectural wood cabinets.
2. Wood furring, blocking, shims, and hanging strips for installing architectural wood cabinets unless concealed within other construction before cabinet installation.

B. Related Requirements:

1. Section 061000 "Rough Carpentry" for wood furring, blocking, shims, and hanging strips required for installing cabinets and concealed within other construction before cabinet installation.

1.3 COORDINATION

A. Coordinate sizes and locations of framing, blocking, furring, reinforcements, and other related units of Work specified in other Sections to support loads imposed by installed and fully loaded cabinets.

1.4 PREINSTALLATION MEETINGS

A. Preinstallation Conference: Conduct conference at Project site.

1.5 ACTION SUBMITTALS

A. Product Data: For each type of product.

B. Shop Drawings: For architectural cabinets.

1. Include plans, elevations, sections, and attachment details.
2. Show full size details.
3. Show locations and sizes of furring, blocking, and hanging strips, including concealed blocking and reinforcement specified in other Sections.
4. Show locations and sizes of cutouts and holes for items installed in architectural cabinets.
5. Show veneer leaves with dimensions, grain direction, exposed face, and identification numbers indicating the flitch and sequence within the flitch for each leaf.

C. Samples:

1. Corner Pieces:

a. Cabinet-front frame joints between stiles and rails and at exposed end pieces, 18 inches high by 18 inches wide by 6 inches deep.
b. Miter joints for standing trim.

2. Exposed cabinet hardware and accessories, one (1) unit for each type and finish.

1.6 INFORMATIONAL SUBMITTALS

A. Qualification Data: For fabricator.

B. Product Certificates: For each type of product.

1.7 QUALITY ASSURANCE

A. Fabricator Qualifications: Shop that employs skilled workers who custom fabricate products similar to those required for this Project and whose products have a record of successful in-service performance.

B. Installer Qualifications: Fabricator of products.

1.8 DELIVERY, STORAGE, AND HANDLING

A. Do not deliver cabinets until painting and similar finish operations that might damage architectural cabinets have been completed in installation areas. Store cabinets in installation areas or in areas where environmental conditions comply with requirements specified in "Field Conditions" Article.

1.9 FIELD CONDITIONS

A. Environmental Limitations: Do not deliver or install cabinets until building is enclosed, wet-work is complete, and HVAC system is operating and maintaining temperature and relative humidity at levels planned for building occupants during the remainder of the construction period.

B. Field Measurements: Where cabinets are indicated to fit to other construction, verify dimensions of other construction by field measurements before fabrication, and indicate measurements on Shop Drawings. Coordinate fabrication schedule with construction progress to avoid delaying the Work.

1. Locate concealed framing, blocking, and reinforcements that support cabinets by field measurements before being enclosed/concealed by construction, and indicate measurements on Shop Drawings.

C. Established Dimensions: Where cabinets are indicated to fit to other construction, establish dimensions for areas where cabinets are to fit. Provide allowance for trimming at site, and coordinate construction to ensure that actual dimensions correspond to established dimensions.

PART 2 - PRODUCTS

2.1 CABINETS, GENERAL

A. Quality Standard: Unless otherwise indicated, comply with the "Architectural Woodwork Standards" for grades of architectural cabinets indicated for construction, finishes, installation, and other requirements.

2.2 WOOD CABINETS FOR OPAQUE FINISH

A. Architectural Woodwork Standards Grade: **Custom**.

B. Type of Construction: Frameless.

C. Door and Drawer-Front Style: Reveal overlay.

1. Reveal Dimension: ½-inch.

D. Species for Exposed Lumber Surfaces: Any closed-grain hardwood.

E. Semi-Exposed Surfaces:

1. Surfaces Other Than Drawer Bodies: Match materials indicated for exposed surfaces.
2. Drawer Sides and Backs: Solid-hardwood lumber.
3. Drawer Bottoms: Hardwood plywood.

F. Drawer Construction: Fabricate with exposed fronts fastened to subfront with mounting screws from interior of body.

1. Join subfronts, backs, and sides with glued dovetail joints.

2.3 WOOD MATERIALS

A. Wood Products: Provide materials that comply with requirements of referenced quality standard for each type of woodwork and quality grade specified unless otherwise indicated.

1. Wood Moisture Content: Five to ten percent (5-10%).

B. Wood Products: Provide materials that comply with requirements of referenced quality standard for each type of woodwork and quality grade specified unless otherwise indicated.

1. Softwood Plywood: DOC PS 1.
2. Veneer-Faced Panel Products (Hardwood Plywood): HPVA HP-1.

2.4 CABINET HARDWARE AND ACCESSORIES

A. Frameless Concealed Hinges (European Type): BHMA A156.9, B01602, 170 degrees of opening, self-closing.

B. Wire Pulls: Back mounted, solid metal, 4 inches long, 5/16-inch in diameter.

C. Catches: Roller catches, BHMA A156.9, B03071.

D. Shelf Rests (Pins): BHMA A156.9, B04013; metal.

E. Drawer Slides: BHMA A156.9.

1. Heavy-Duty (Grade 1HD-100 and Grade 1HD-200): Side mount.

a. Type: Full-overtravel-extension.
b. Material: Zinc-plated-steel ball-bearing slides.
c. Motion Feature: Self-closing mechanism.

2. General purpose drawers not more than 3 inches high, but not more than 6 inches high and not more than 24 inches wide, provide Grade 1HD-100 with 75-lb. capacity.
3. File drawers more than 6 inches high or more than 24 inches wide, provide Grade 1HD-200 with 100-lb. capacity.
4. Computer keyboard tray, provide Grade 1HD-100 with 75-lb load capacity.

F. Slides for Sliding Glass Doors: ANSI/BHMA A156.9, B07063; aluminum.

G. Locks for Sliding Glass Doors: Spring-activated plunger, similar to CR Laurence **#981** or approved equal; chrome finish, with ferrule and two (2) keys. Glass may require notching.

H. Door Locks: BHMA A156.11, E07121.

1. Sized for cabinet thickness on the active leaf as indicated in the documents, with two (2) keys master keyed all alike, with manufacturer's standard finger operated sash lock on the adjacent inactive leaf (in double door applications). For bidding purposes, the Contractor shall assume that one hundred percent (100%) of all cabinet operating door leaves or pairs of doors shall be locked, except for Detox Rooms.

I. Drawer Locks: BHMA A156.11, E07041.

1. Sized for drawer thickness, with two (2) keys master keyed all alike. For bidding purposes, the Contractor shall assume that one hundred percent (100%) of all drawers shall be locked, except for Detox Rooms.

J. Door and Drawer Silencers: BHMA A156.16, L03011.

K. Glass for Reception Desk: **GL-5**, as indicated in Section 088000 “Glazing”.

L. Grommets for Cable Passage: 3-inch OD, molded-plastic with single slot for wire passage.

1. Product: Subject to compliance with requirements, provide “**XG3**” by Doug Mockett & Company, Inc. or approved equal.

M. Exposed Hardware Finishes: For exposed hardware, provide finish that complies with BHMA A156.18 for BHMA finish number indicated.

1. Satin Chromium Plated: BHMA 626 for brass or bronze base; BHMA 652 for steel base.
2. Satin Stainless-Steel: BHMA 630.

N. For concealed hardware, provide manufacturer's standard finish that complies with product class requirements in BHMA A156.9.

2.5 MISCELLANEOUS MATERIALS

A. Furring, Blocking, Shims, and Hanging Strips: Softwood or hardwood lumber, kiln dried to less than fifteen percent (15%) moisture content.

B. Anchors: Select material, type, size, and finish required for each substrate for secure anchorage. Provide metal expansion sleeves or expansion bolts for post-installed anchors. Use nonferrous-metal or hot-dip galvanized anchors and inserts at inside face of exterior walls and at floors.

C. Adhesives: Do not use adhesives that contain urea formaldehyde.

2.6 FABRICATION

A. Fabricate architectural cabinets to dimensions, profiles, and details indicated. Ease edges and corners 1/16-inch radius unless otherwise indicated.

B. Complete fabrication, including assembly and hardware application, to maximum extent possible before shipment to Project site. Disassemble components only as necessary for shipment and installation. Where necessary for fitting at site, provide ample allowance for scribing, trimming, and fitting.

1. Trial fit assemblies at fabrication shop that cannot be shipped completely assembled. Install dowels, screws, bolted connectors, and other fastening devices that can be removed after trial fitting. Verify that various parts fit as intended and check measurements of assemblies against field measurements before disassembling for shipment.

C. Shop-cut openings to maximum extent possible to receive hardware, appliances, electrical work, and similar items. Locate openings accurately and use templates or roughing-in diagrams to produce accurately sized and shaped openings. Sand edges of cutouts to remove splinters and burrs.

D. Install glass to comply with applicable requirements in Section 088000 "Glazing" and in GANA's "Glazing Manual."

1. For glass in wood frames, secure glass with removable stops.
2. For exposed glass edges, polish and grind smooth.

2.7 SHOP FINISHING

A. Preparation for Finishing: Comply with referenced quality standard for sanding, filling countersunk fasteners, sealing concealed surfaces, and similar preparations for finishing architectural cabinets, as applicable to each unit of work.

1. Backpriming: Apply one (1) coat of sealer or primer, compatible with finish coats, to concealed surfaces of cabinets.

PART 3 - EXECUTION

3.1 PREPARATION

A. Before installation, condition cabinets to humidity conditions in installation areas for not less than 72 hours.

3.2 INSTALLATION

A. Architectural Woodwork Standards Grade: Install cabinets to comply with quality standard grade of item to be installed.

B. Assemble cabinets and complete fabrication at Project site to extent that it was not completed in the shop.

C. Anchor cabinets to anchors or blocking built in or directly attached to substrates. Secure with countersunk, concealed fasteners and blind nailing. Use fine finishing nails or finishing screws for exposed fastening, countersunk and filled flush with woodwork.

D. Install cabinets level, plumb, and true in line to a tolerance of 1/8-inch in 96 inches using concealed shims.

1. Scribe and cut cabinets to fit adjoining work, refinish cut surfaces, and repair damaged finish at cuts.
2. Install cabinets without distortion so doors and drawers fit openings and are accurately aligned. Adjust hardware to center doors and drawers in openings and to provide unencumbered operation. Complete installation of hardware and accessory items as indicated.
3. Fasten wall cabinets through back, near top and bottom, and at ends not more than 16 inches o.c. with No. 10 wafer-head screws sized for not less than 1½-inch penetration into wood framing, blocking, or hanging strips or No. 10 wafer-head sheet metal screws through metal backing or metal framing behind wall finish.

E. Field Finishing: See Section 099123 "Interior Painting" for finishing of installed architectural cabinets.

3.3 ADJUSTING AND CLEANING

A. Repair damaged and defective cabinets, where possible, to eliminate functional and visual defects. Where not possible to repair, replace architectural cabinets. Adjust joinery for uniform appearance.

B. Clean, lubricate, and adjust hardware.

C. Clean cabinets on exposed and semi-exposed surfaces. Touch up finishes to restore damaged or soiled areas.

END OF SECTION 064113

SECTION 071113 - BITUMINOUS DAMPPROOFING

PART 1 - GENERAL

1.1 RELATED DOCUMENTS

A. Drawings and general provisions of the Contract, including General and Supplementary Conditions and Division 01 Specification Sections, apply to this Section.

1.2 SUMMARY

A. Section Includes:

1. Cold-applied, emulsified-asphalt dampproofing.

1.3 SUBMITTALS

A. Product Data: For each type of product indicated. Include recommendations for method of application, primer, number of coats, coverage, or thickness.

B. Material Certificates: For each product, signed by manufacturers.

1.4 PROJECT CONDITIONS

A. Weather Limitations: Proceed with installation only when existing and forecasted weather conditions permit dampproofing to be performed according to manufacturers' written instructions.

PART 2 - PRODUCTS

2.1 MATERIALS, GENERAL

A. Source Limitations: Obtain primary dampproofing materials and primers from single source from single manufacturer.

B. VOC Content: Products shall comply with VOC content limits of authorities having jurisdiction unless otherwise required.

2.2 COLD-APPLIED, EMULSIFIED-ASPHALT DAMPPROOFING

A. Manufacturers:

1. Henry Company
2. Karnak Corporation
3. Meadows, W. R., Inc.
4. Substitutions: Under provisions of Section 012500 “Substitution Procedures”.

B. Trowel Coats: ASTM D 1227, Type II, Class 1.

C. VOC Content: 0.30 lb/gallon or less.

2.3 MISCELLANEOUS MATERIALS

A. Emulsified-Asphalt Primer: ASTM D 1227, Type III, Class 1, except diluted with water as recommended by manufacturer.

B. Asphalt-Coated Glass Fabric: ASTM D 1668, Type I.

C. Patching Compound: Manufacturer's fibered mastic of type recommended by dampproofing manufacturer.

PART 3 - EXECUTION

3.1 EXAMINATION

A. Examine substrates, with Installer present, for compliance with requirements for surface smoothness and other conditions affecting performance of work.

1. Proceed with dampproofing application only after substrate construction and penetrating work have been completed and unsatisfactory conditions have been corrected.

3.2 PREPARATION

A. Protection of Other Work: Mask or otherwise protect adjoining exposed surfaces from being stained, spotted, or coated with dampproofing. Prevent dampproofing materials from entering and clogging weep holes and drains.

B. Clean substrates of projections and substances detrimental to work; fill voids, seal joints, and apply bond breakers if any, as recommended by prime material manufacturer.

C. Apply patching compound for filling and patching tie holes, honeycombs, reveals, and other imperfections; cover with asphalt-coated glass fabric.

3.3 APPLICATION, GENERAL

A. Comply with manufacturer's written instructions for dampproofing application, cure time between coats, and drying time before backfilling unless more stringent requirements are indicated.

1. Apply dampproofing to provide continuous plane of protection.
2. Apply additional coats if recommended in writing by manufacturer or to achieve a smooth surface and uninterrupted coverage.

B. Where dampproofing footings and foundation walls, apply from finished-grade line to top of footing; extend over top of footing and down a minimum of 6 inches over outside face of footing.

1. Extend dampproofing 12 inches onto intersecting walls and footings, but do not extend onto surfaces exposed to view when Project is completed.

2. Install flashings and corner protection stripping at internal and external corners, changes in plane, construction joints, cracks, and where shown as "reinforced," by embedding an 8-inch-wide strip of asphalt-coated glass fabric in a heavy coat of dampproofing. Dampproofing coat for embedding fabric is in addition to other coats required.

3.4 COLD-APPLIED, EMULSIFIED-ASPHALT DAMPPROOFING

A. Concrete Foundations: Apply one (1) trowel coat at not less than 4 gallon/100 sq. ft.

3.5 CLEANING

A. Remove dampproofing materials from surfaces not intended to receive dampproofing.

END OF SECTION 071113

SECTION 072100 - THERMAL INSULATION

PART 1 - GENERAL

1.1 RELATED DOCUMENTS

A. Drawings and general provisions of the Contract, including General and Supplementary Conditions and Division 01 Specification Sections, apply to this Section.

1.2 SUMMARY

A. Section Includes:

1. Extruded polystyrene foam-plastic board insulation.
2. Polyisocyanurate foam-plastic board insulation.
3. Glass-fiber blanket insulation.
4. Mineral-wool blanket insulation.

B. Related Requirements:

1. Section 092900 "Gypsum Board" for sound attenuation blanket used as acoustic insulation.

1.3 ACTION SUBMITTALS

A. Product Data: For each type of product.

1.4 INFORMATIONAL SUBMITTALS

A. Product Test Reports: For each product, for tests performed by a qualified testing agency.

B. Evaluation Reports: For foam-plastic insulation, from ICC-ES.

1.5 DELIVERY, STORAGE, AND HANDLING

A. Protect insulation materials from physical damage and from deterioration due to moisture, soiling, and other sources. Store inside and in a dry location. Comply with manufacturer's written instructions for handling, storing, and protecting during installation.

B. Protect foam-plastic board insulation as follows:

1. Do not expose to sunlight except to necessary extent for period of installation and concealment.
2. Protect against ignition at all times. Do not deliver foam-plastic board materials to Project site until just before installation time.
3. Quickly complete installation and concealment of foam-plastic board insulation in each area of construction.

PART 2 - PRODUCTS

2.1 EXTRUDED POLYSTYRENE FOAM-PLASTIC BOARD INSULATION

A. Manufacturers: Subject to compliance with requirements, available manufacturers offering products that may be incorporated into the Work include, but are not limited to, the following:

1. DiversiFoam Products
2. Dow Chemical Company (The)
3. Insulfoam
4. Owens Corning
5. Substitutions: Under provisions of Section 012500 “Substitution Procedures”.

B. Extruded Polystyrene Board Insulation, Type VI, Drainage Panels: ASTM C578, Type VI, 40-psi minimum compressive strength; unfaced; fabricated with shiplap or channel edges and with one (1) side having grooved drainage channels.

1. Flame-Spread Index: Not more than 25 when tested in accordance with ASTM E 84.
2. Smoke-Developed Index: Not more than 450 when tested in accordance with ASTM E 84.
3. Labeling: Provide identification of mark indicating R-value of each piece of insulation 12 inches and wider in width.

2.2 POLYISOCYANURATE FOAM-PLASTIC BOARD INSULATION

A. Manufacturers: Subject to compliance with requirements, available manufacturers offering products that may be incorporated into the Work include, but are not limited to, the following:

1. DuPont de Nemours, Inc.
2. Johns Manville, a Berkshire Hathaway company
3. Rmax, Inc.
4. Substitutions: Under provisions of Section 012500 “Substitution Procedures”.

B. Polyisocyanurate Board Insulation, Foil Faced: ASTM C 1289, foil faced, Type I, Class 1 or 2.

1. Fire Propagation Characteristics: Passes NFPA 285 testing as part of an approved assembly.
2. Labeling: Provide identification of mark indicating R-value of each piece of insulation 12 inches and wider in width.

2.3 GLASS-FIBER BLANKET INSULATION

A. Manufacturers: Subject to compliance with requirements, available manufacturers offering products that may be incorporated into the Work include, but are not limited to, the following:

1. CertainTeed Corporation
2. Johns Manville
3. Owens Corning
4. Substitutions: Under provisions of Section 012500 “Substitution Procedures”.

B. Glass-Fiber Blanket, Unfaced: ASTM C 665, Type I; with maximum flame-spread and smoke-developed indexes of 25 and 50, respectively, per ASTM E 84; passing ASTM E 136 for combustion characteristics.

1. Thermal Resistance: As indicated in the Drawings.
2. Flame-Spread Index: Not more than 25 when tested in accordance with ASTM E84.
3. Smoke-Developed Index: Not more than 50 when tested in accordance with ASTM E84.
4. Labeling: Provide identification of mark indicating R-value of each piece of insulation 12 inches and wider in width.

2.4 MINERAL-WOOL BLANKET INSULATION

A. Manufacturers: Subject to compliance with requirements, available manufacturers offering products that may be incorporated into the Work include, but are not limited to, the following:

1. Johns Manville, a Berkshire Hathaway company
2. Rockwood International
3. Thermafiber, Inc., an Owens Corning company
4. Substitutions: Under provisions of Section 012500 “Substitution Procedures”.

B. Mineral-Wool Blanket Insulation, Unfaced: ASTM C 665, Type I (blankets without membrane facing); consisting of fibers; passing ASTM E 136 for combustion characteristics.

1. Flame-Spread Index: Not more than 25 when tested in accordance with ASTM E 84.
2. Smoke-Developed Index: Not more than 50 when tested in accordance with ASTM E 84.
3. Labeling: Provide identification of mark indicating R-value of each piece of insulation 12 inches and wider in width.

2.5 ACCESSORIES

A. Insulation for Miscellaneous Voids:

1. Glass-Fiber Insulation: ASTM C 764, Type II, loose fill; with maximum flame-spread and smoke-developed indexes of 5, per ASTM E 84.

PART 3 - EXECUTION

3.1 PREPARATION

A. Clean substrates of substances that are harmful to insulation, including removing projections capable of puncturing insulation or vapor retarders, or that interfere with insulation attachment.

3.2 INSTALLATION, GENERAL

A. Comply with insulation manufacturer's written instructions applicable to products and applications.

B. Install insulation that is undamaged, dry, and unsoiled and that has not been left exposed to ice, rain, or snow at any time.

C. Install insulation with manufacturer's R-value label exposed after insulation is installed.

D. Extend insulation to envelop entire area to be insulated. Fit tightly around obstructions and fill voids with insulation. Remove projections that interfere with placement.

E. Provide sizes to fit applications and selected from manufacturer's standard thicknesses, widths, and lengths. Apply single layer of insulation units unless multiple layers are otherwise shown or required to make up total thickness or to achieve R-value.

3.3 INSTALLATION OF FOUNDATION WALL INSULATION

A. Butt panels together for tight fit.

B. Adhesive Installation: Install with adhesive or press into tacky waterproofing or dampproofing according to manufacturer's written instructions.

3.4 INSTALLATION OF CAVITY-WALL INSULATION

A. Foam-Plastic Board Insulation: Install pads of adhesive spaced approximately 24 inches o.c. both ways on inside face and as recommended by manufacturer.

1. Fit courses of insulation between wall ties and other obstructions, with edges butted tightly in both directions.
2. Press units firmly against inside substrates.

3.5 INSTALLATION OF INSULATION IN FRAMED CONSTRUCTION

A. Blanket Insulation: Install in cavities formed by framing members according to the following requirements:

1. Use insulation widths and lengths that fill the cavities formed by framing members. If more than one (1) length is required to fill the cavities, provide lengths that will produce a snug fit between ends.
2. Place insulation in cavities formed by framing members to produce a friction fit between edges of insulation and adjoining framing members.
3. Maintain 3-inch clearance of insulation around recessed lighting fixtures not rated for or protected from contact with insulation.
4. For metal-framed wall cavities where cavity heights exceed 96 inches, support unfaced blankets mechanically and support faced blankets by taping flanges of insulation to flanges of metal studs.

B. Miscellaneous Voids: Install insulation in miscellaneous voids and cavity spaces where required to prevent gaps in insulation using the following materials:

1. Glass-Fiber Insulation: Compact to approximately forty percent (40%) of normal maximum volume equaling a density of approximately 2.5 lb./cu. ft.

3.6 PROTECTION

A. Protect installed insulation from damage due to harmful weather exposures, physical abuse, and other causes.

B. Provide temporary coverings or enclosures where insulation is subject to abuse and cannot be concealed and protected by permanent construction immediately after installation.

END OF SECTION 072100

SECTION 072500 - WEATHER BARRIERS

PART 1 - GENERAL

1.1 RELATED DOCUMENTS

A. Drawings and general provisions of the Contract, including General and Supplementary Conditions and Division 01 Specification Sections, apply to this Section.

1.2 SUMMARY

A. Section Includes:

1. Building wrap.
2. Flexible flashing.

1.3 ACTION SUBMITTALS

A. Product Data: For each type of product.

1. For building wrap, include data on air and water-vapor permeance based on testing according to referenced standards.

1.4 INFORMATIONAL SUBMITTALS

A. Evaluation Reports: For water-resistive barrier and flexible flashing, from ICC-ES.

PART 2 - PRODUCTS

2.1 WATER-RESISTIVE BARRIER

A. Building Wrap: ASTM E 1677, Type I air barrier; with flame-spread and smoke-developed indexes of less than 25 and 450, respectively, when tested according to ASTM E 84; UV stabilized; and acceptable to authorities having jurisdiction.

1. Products: Subject to compliance with requirements, available products that may be incorporated into the Work include, but are not limited to, the following:

   a. Dow Chemical Company (The); **Styrofoam Weathermate Plus Brand Housewrap**
   b. DuPont (E. I. du Pont de Nemours and Company); **Tyvek CommercialWrap**
   c. Raven Industries Inc.; **Fortress Pro Weather Protective Barrier**
   d. VaproShield LLC; **RevealShield SA**
   e. Substitutions: Under provisions of Section 012500 “Substitution Procedures”.

2. Water-Vapor Permeance: Not less than 28 perms per ASTM E 96, Desiccant Method (Procedure A).
3. Air Permeance: Not more than 0.004 cfm/sq. ft. at 0.3-inch wg when tested according to ASTM E 2178.

4. Allowable UV Exposure Time: Not less than 3 months.
5. Fire Propagation Characteristics: Passes NFPA 285 testing as part of an approved assembly.

B. Building-Wrap Tape: Pressure-sensitive plastic tape recommended by building-wrap manufacturer for sealing joints and penetrations in building wrap.

2.2 FLEXIBLE FLASHING

A. Butyl Rubber Flashing: Composite, self-adhesive, flashing product consisting of a pliable, butyl rubber compound, bonded to a high-density polyethylene film, aluminum foil, or spunbonded polyolefin to produce an overall thickness of not less than 64 mil.

1. Products: Subject to compliance with requirements, available products that may be incorporated into the Work include, but are not limited to, the following:

a. DuPont (E. I. du Pont de Nemours and Company); **Flexwrap NF**
b. Raven Industries Inc.
c. Substitutions: Under provisions of Section 012500 “Substitution Procedures”.

2.3 MISCELLANEOUS MATERIALS

A. Fasteners: 1-5/8-inch rust-resistant screw with 2-inch diameter plastic cap or manufacturer approved 1¼ or 2-inch metal gasketed washer.

B. Sealants: As specified in Section 079200 “Joint Sealants”.

C. Adhesives: Provide adhesive recommended by weather barrier manufacturer.

D. Primers: Provide flashing manufacturer recommended primer to assist in adhesion between substrate and flashing.

PART 3 - EXECUTION

3.1 WATER-RESISTIVE BARRIER INSTALLATION

A. Cover exposed exterior surface of sheathing with water-resistive barrier securely fastened to framing immediately after sheathing is installed.

B. Cover sheathing with water-resistive barrier as follows:

1. Cut back barrier ½-inch on each side of the break in supporting members at expansion- or control-joint locations.
2. Apply barrier to cover vertical flashing with a minimum 4-inch overlap unless otherwise indicated.

C. Building Wrap: Comply with manufacturer's written instructions.

1. Seal seams, edges, fasteners, and penetrations with tape.
2. Extend into jambs of openings and seal corners with tape.

3.2 FLEXIBLE FLASHING INSTALLATION

A. Apply flexible flashing where indicated to comply with manufacturer's written instructions.

1. Prime substrates as recommended by flashing manufacturer.
2. Lap seams and junctures with other materials at least 4 inches except that at flashing flanges of other construction, laps need not exceed flange width.
3. Lap flashing over water-resistive barrier at bottom and sides of openings.
4. Lap water-resistive barrier over flashing at heads of openings.
5. After flashing has been applied, roll surfaces with a hard rubber or metal roller to ensure that flashing is completely adhered to substrates.

END OF SECTION 072500

SECTION 072726 - FLUID-APPLIED MEMBRANE AIR BARRIERS

PART 1 - GENERAL

1.1 RELATED DOCUMENTS

A. Drawings and general provisions of the Contract, including General and Supplementary Conditions and Division 01 Specification Sections, apply to this Section.

1.2 SUMMARY

A. Section Includes:

1. Fluid-applied, vapor-permeable air barriers.

B. Related Requirements:

1. Section 061600 "Sheathing" for wall sheathings and wall sheathing joint-and-penetration treatments.

1.3 DEFINITIONS

A. Air-Barrier Material: A primary element that provides a continuous barrier to the movement of air.

B. Air-Barrier Accessory: A transitional component of the air barrier that provides continuity.

C. Air-Barrier Assembly: The collection of air-barrier materials and accessory materials applied to an opaque wall, including joints and junctions to abutting construction, to control air movement through the wall.

1.4 ACTION SUBMITTALS

A. Product Data: For each type of product.

1. Include manufacturer's written instructions for evaluating, preparing, and treating substrate; technical data; dry film thickness; and tested physical and performance properties of products.

B. Shop Drawings: For air-barrier assemblies.

1. Show locations and extent of air barrier materials, accessories, and assemblies specific to Project conditions.
2. Include details for substrate joints and cracks, counterflashing strips, penetrations, inside and outside corners, terminations, and tie-ins with adjoining construction.
3. Include details of interfaces with other materials that form part of air barrier.

1.5 INFORMATIONAL SUBMITTALS

A. Qualification Data: For Installer.

B. Product Certificates: From air-barrier manufacturer, certifying compatibility of air barriers and accessory materials with Project materials that connect to or that come in contact with the barrier.

C. Product Test Reports: For each air-barrier assembly, for tests performed by a qualified testing agency.

D. Field quality-control reports.

1.6 QUALITY ASSURANCE

A. Installer Qualifications: An entity that employs installers and supervisors who are trained and approved by manufacturer.

1.7 DELIVERY, STORAGE, AND HANDLING

A. Deliver materials to the jobsite in undamaged and clearly marked containers and/or wrapping indicating the name of the manufacturer and product.

B. Store materials as recommended by the manufacturer and conform to applicable safety regulatory agencies.

C. Protect stored materials from direct sunlight, open flame, or excessive heat.

D. Remove and replace liquid materials that cannot be applied within their stated shelf life.

1.8 FIELD CONDITIONS

A. Environmental Limitations: Apply air barrier within the range of ambient and substrate temperatures recommended by air-barrier manufacturer.

1. Protect substrates from environmental conditions that affect air-barrier performance.
2. Do not apply air barrier to a damp or wet substrate or during snow, rain, fog, or mist.

1.9 WARRANTY

A. Special Warranty: Manufacturer agrees to repair or replace air and vapor barrier and accessories that fail in materials or workmanship within specified warranty period.

1. Warranty Period: Five (5) years from date of Substantial Completion.

PART 2 - PRODUCTS

2.1 MATERIALS

A. Source Limitations: Obtain primary air-barrier materials and air-barrier accessories from single source from single manufacturer.

B. VOC Content: 250 g/L or less when calculated according to 40 CFR 59, Subpart D (EPA Method 24) and complying with VOC content limits of authorities having jurisdiction.

2.2 PERFORMANCE REQUIREMENTS

A. Air Barrier Performance: Air barrier assembly and seals with adjacent construction shall be capable of performing as a continuous air barrier. Air-barrier assemblies shall be capable of accommodating substrate movement and of sealing substrate expansion and control joints, construction material changes, penetrations, tie-ins to installed waterproofing, and transitions at perimeter conditions without deterioration and air leakage exceeding specified limits.

2.3 VAPOR PERMEABLE AIR BARRIERS

A. Vapor-Permeable Air Barrier: Synthetic polymer membrane.

1. Basis of Design:

   a. Henry Company; **Air-Bloc 33MR**

2. Products: Subject to compliance with requirements, available products that may be incorporated into the Work include, but are not limited to, the following:

   a. GCP Applied Technologies, Inc.
   b. Tremco, Inc.
   c. Substitutions: Under provisions of Section 012500 “Substitution Procedures.

3. Physical and Performance Properties:

   a. Air Permeance: Maximum 0.008 cfm/sq. ft. of surface area at 1.57-lbf/sq. ft. pressure difference; ASTM E 2178.
   b. Vapor Permeance: Minimum 11 perms; ASTM E 96, Desiccant Method, Procedure A.
   c. Ultimate Elongation: Minimum two hundred percent (2005); ASTM D 412, Die C.
   d. UV Resistance: Can be exposed to sunlight for thirty (30) days according to manufacturer's written instructions.

2.4 ACCESSORY MATERIALS

A. General: Accessory materials recommended by air-barrier manufacturer to produce a complete air-barrier assembly and compatible with primary air-barrier material and adjacent construction to which they may seal.

B. Primer: Liquid waterborne primer recommended for substrate by air-barrier material manufacturer.

C. Joint Reinforcing Strip: Air-barrier manufacturer's glass-fiber-mesh tape.

D. Substrate-Patching Membrane: Manufacturer's standard trowel-grade substrate filler.

E. Adhesive and Tape: Air-barrier manufacturer's standard adhesive and pressure-sensitive adhesive tape.

F. Modified Bituminous Transition Strip: Vapor retarding, 40 mils thick, smooth surfaced, self-adhering; consisting of 36 mils of rubberized asphalt laminated to a 4-mil-thick polyethylene film with release liner backing.

G. Joint Sealant: ASTM C 920, single-component, neutral-curing silicone; Class 100/50 (low modulus), Grade NS, Use NT related to exposure, and, as applicable to joint substrates indicated, Use O. Comply with Section 079200 "Joint Sealants."

H. Termination Mastic: Air-barrier manufacturer's standard cold fluid-applied elastomeric liquid; trowel grade.

PART 3 - EXECUTION

3.1 EXAMINATION

A. Examine substrates, areas, and conditions, with Installer present, for compliance with requirements and other conditions affecting performance of the Work.

1. Verify that substrates are sound and free of oil, grease, dirt, excess mortar, or other contaminants.
2. Verify that substrates are visibly dry and free of moisture.

B. Proceed with installation only after unsatisfactory conditions have been corrected.

3.2 SURFACE PREPARATION

A. Clean, prepare, treat, fill, and seal substrate and joints and cracks in substrate according to manufacturer's written instructions and details. Provide clean, dust-free, and dry substrate for air-barrier application.

B. Mask off adjoining surfaces not covered by air barrier to prevent spillage and overspray affecting other construction.

C. At changes in substrate plane, apply sealant or termination mastic beads at sharp corners and edges to form a smooth transition from one plane to another.

3.3 ACCESSORIES INSTALLATION

A. Install accessory materials according to air-barrier manufacturer's written instructions and details to form a seal with adjacent construction and ensure continuity of air and water barrier.

1. Coordinate the installation of air barrier with installation of roofing membrane and base flashing to ensure continuity of air barrier with roofing membrane.
2. Install transition strip on roofing membrane or base flashing so that a minimum of 3 inches of coverage is achieved over each substrate.
3. Unless manufacturer recommends in writing against priming, apply primer to substrates at required rate and allow it to dry. Limit priming to areas that will be covered by air-barrier material on same day. Reprime areas exposed for more than 24 hours.

B. Connect and seal exterior wall air-barrier material continuously to roofing-membrane air barrier, concrete below-grade structures, floor-to-floor construction, exterior glazing and window systems, glazed curtain-wall systems, storefront systems, exterior louvers, exterior door framing, and other construction used in exterior wall openings, using accessory materials.

C. At end of each working day, seal top edge of strips and transition strips to substrate with termination mastic.

D. Apply joint sealants forming part of air-barrier assembly within manufacturer's recommended application temperature ranges. Consult manufacturer when sealant cannot be applied within these temperature ranges.

E. Wall Openings: Prime concealed, perimeter frame surfaces of windows, curtain walls, storefronts, and doors. Apply transition strip so that a minimum of 3 inches of coverage is achieved over each substrate. Maintain 3 inches of full contact over firm bearing to perimeter frames with not less than 1-inch of full contact.

1. Transition Strip: Roll firmly to enhance adhesion.

F. Seal exposed edges of strips at seams, cuts, penetrations, and terminations not concealed by metal counterflashings or ending in reglets with termination mastic.

G. Repair punctures, voids, and deficient lapped seams in strips and transition strips. Slit and flatten fishmouths and blisters. Patch with transition strips extending 6 inches beyond repaired areas in strip direction.

3.4 AIR-BARRIER MATERIAL INSTALLATION

A. Apply air-barrier material to form a seal with strips and transition strips and to achieve a continuous air barrier according to air-barrier manufacturer's written instructions and details. Apply air-barrier material within manufacturer's recommended application temperature ranges.

1. Unless manufacturer recommends in writing against priming, apply primer to substrates at required rate and allow it to dry.
2. Limit priming to areas that will be covered by air-barrier material on same day. Reprime areas exposed for more than 24 hours.
3. Where multiple prime coats are needed to achieve required bond, allow adequate drying time between coats.

B. Air Barriers: Apply continuous unbroken air-barrier material to substrates according to the following thickness. Apply air-barrier material in full contact around protrusions.

1. Vapor-Permeable Air Barrier: Total dry film thickness as recommended in writing by manufacturer to comply with performance requirements, but not less than 55 mils, applied in one (1) or more equal coats.

C. Do not cover air barrier until it has been tested and inspected by Owner's testing agency.

D. Correct deficiencies in or remove air barrier that does not comply with requirements; repair substrates and reapply air-barrier components.

3.5 FIELD QUALITY CONTROL

A. Testing Agency: Engage a qualified testing agency to perform tests and inspections.

B. Inspections: Air-barrier materials, accessories, and installation are subject to inspection for compliance with requirements. Inspections may include the following:

1. Air-barrier dry film thickness.
2. Site conditions for application temperature and dryness of substrates have been maintained.
3. Maximum exposure time of materials to UV deterioration has not been exceeded.
4. Surfaces have been primed, if applicable.
5. Laps in strips and transition strips have complied with minimum requirements and have been shingled in the correct direction (or mastic has been applied on exposed edges), with no fishmouths.
6. Termination mastic has been applied on cut edges.
7. Strips and transition strips have been firmly adhered to substrate.
8. Compatible materials have been used.
9. Transitions at changes in direction and structural support at gaps have been provided.
10. Connections between assemblies (air-barrier and sealants) have complied with requirements for cleanliness, surface preparation and priming, structural support, integrity, and continuity of seal.
11. All penetrations have been sealed.

C. Tests: As determined by Owner's testing agency from among the following tests:

1. Adhesion Testing: Air-barrier assemblies will be tested for minimum air-barrier adhesion of 30 lbf/sq. in. according to ASTM D 4541 for each 600 sq. ft. of installed air barrier or part thereof.

D. Air barriers will be considered defective if they do not pass tests and inspections.

1. Apply additional air-barrier material, according to manufacturer's written instructions, where inspection results indicate insufficient thickness.
2. Remove and replace deficient air-barrier components for retesting as specified above.

E. Repair damage to air barriers caused by testing; follow manufacturer's written instructions.

F. Prepare test and inspection reports.

3.6 CLEANING AND PROTECTION

A. Protect air-barrier system from damage during application and remainder of construction period, according to manufacturer's written instructions.

1. Protect air barrier from exposure to UV light and harmful weather exposure as recommended in writing by manufacturer. If exposed to these conditions for longer than recommended, remove and replace air barrier or install additional, full-thickness, air-barrier application after repairing and preparing the overexposed membrane according to air-barrier manufacturer's written instructions.
2. Protect air barrier from contact with incompatible materials and sealants not approved by air-barrier manufacturer.

B. Clean spills, stains, and soiling from construction that would be exposed in the completed work using cleaning agents and procedures recommended in writing by manufacturer of affected construction.

C. Remove masking materials after installation.

END OF SECTION 072726

SECTION 073113 - ASPHALT SHINGLES

PART 1 - GENERAL

1.1 RELATED DOCUMENTS

A. Drawings and general provisions of the Contract, including General and Supplementary Conditions and Division 01 Specification Sections, apply to this Section.

1.2 SUMMARY

A. Section Includes:

1. Asphalt shingles.
2. Underlayment.
3. Roof vents.
4. Metal flashing and trim.

B. Related Sections:

1. Section 012300 “Alternates” for work of this Section included in alternates.
2. Section 061000 "Rough Carpentry" for wood blocking.
3. Section 061600 "Sheathing" for roof sheathing.
4. Section 076200 "Sheet Metal Flashing and Trim" for metal flashings.

1.3 DEFINITION

A. Roofing Terminology: See ASTM D 1079 and glossary of NRCA's "The NRCA Roofing and Waterproofing Manual" for definitions of terms related to roofing work in this Section.

1.4 PREINSTALLATION MEETINGS

A. Preinstallation Conference: Conduct conference at Project site.

1.5 ACTION SUBMITTALS

A. Product Data: For each type of product indicated.

B. Samples: For each exposed product and for each color and texture specified.

1. Asphalt Shingles: Full size.
2. Ridge and Hip Cap Shingles: Full size.
3. Roof Vent: 12-inch-long Sample.

1.6 INFORMATIONAL SUBMITTALS

A. Qualification Data: For qualified Installer.

B. Product Test Reports: For each type of asphalt shingle and underlayment product indicated, for tests performed by manufacturer and witnessed by a qualified testing agency.

C. Evaluation Reports: For synthetic underlayment, from ICC-ES or other testing and inspecting agency acceptable to authorities having jurisdiction, indicating that product is suitable for intended use under applicable building codes.

D. Sample Warranty: For manufacturer's warranty and photovoltaic overburden form.

1.7 CLOSEOUT SUBMITTALS

A. Maintenance Data: For asphalt shingle to include in maintenance manuals.

1.8 MAINTENANCE MATERIAL SUBMITTALS

A. Furnish extra materials that match products installed and that are packaged with protective covering for storage and identified with labels describing contents.

1. Asphalt Shingles: 100 sq. ft of each type, in unbroken bundles.

1.9 QUALITY ASSURANCE

A. Installer Qualifications: An authorized representative who is trained and approved by manufacturer.

1.10 DELIVERY, STORAGE, AND HANDLING

A. Store roofing materials in a dry, well-ventilated location protected from weather, sunlight, and moisture according to manufacturer's written instructions.

B. Store underlayment rolls on end on pallets or other raised surfaces. Do not double stack rolls.

C. Protect unused roofing materials from weather, sunlight, and moisture when left overnight or when roofing work is not in progress.

D. Handle, store, and place roofing materials in a manner to prevent damage to roof deck or structural supporting members.

1.11 FIELD CONDITIONS

A. Environmental Limitations: Install self-adhering sheet underlayment within the range of ambient and substrate temperatures recommended by manufacturer.

1.12 WARRANTY

A. Manufacturer’s Warranty: Manufacturer agrees to repair or replace components of roof system that fail within specified warranty period.

1. Failures include, but are not limited to, the following:

a. Manufacturing defects.
b. Structural failures including failure of asphalt shingles to self-seal after a reasonable time.

2. Warranty includes asphalt shingles, underlayment, fasteners, roofing accessories, metal flashings, and other components of roofing system for an edge-to-edge warranty.
3. Material Warranty Period: Minimum forty (40) years from date of Substantial Completion.
4. Workmanship Warranty Period: Twenty (20) years from date of Substantial Completion.

PART 2 - PRODUCTS

2.1 PERFORMANCE REQUIREMENTS

A. Exterior Fire-Test Exposure: Provide asphalt shingles and related roofing materials identical to those of assemblies tested for Class A fire resistance according to ASTM E 108 or UL 790 by Underwriters Laboratories or another testing and inspecting agency acceptable to authorities having jurisdiction. Identify products with appropriate markings of applicable testing agency.

2.2 GLASS-FIBER-REINFORCED ASPHALT SHINGLES

A. Multi-Tab-Strip Asphalt Shingles: ASTM D 3462, “Architectural Style”, UL Rating of A and Wind Resistance Label; glass-fiber reinforced, mineral-granule surfaced, and self-sealing.

1. Manufacturers: Subject to compliance with requirements, available manufacturers offering products that may be incorporated into the Work include, but are not limited to, the following:

   a. CertainTeed Corporation; **Landmark Premium**
   b. GAF Materials Corporation; **Timberline Ultra HD**
   c. Owens Corning; **Duration Premium**
   d. Substitutions: Under provisions of Section 012500 “Substitution Procedures”.

2. Color and Blends: As selected by Architect and Owner from manufacturer's entire range.

B. Hip and Ridge Shingles: Manufacturer's standard units to match asphalt shingles.

2.3 UNDERLAYMENT MATERIALS

A. Self-Adhering Sheet Underlayment, Polyethylene Faced (Ice & Water Shield): ASTM D 1970, minimum of 40-mil-thick, slip-resisting, polyethylene-film-reinforced top surface laminated to SBS-modified asphalt adhesive, with release paper backing; cold applied.

1. Manufacturers: Subject to compliance with requirements, available manufacturers offering products that may be incorporated into the Work include, but are not limited to, the following:

   a. GCP Applied Technologies, Inc.
   b. Johns Manville, a Berkshire Hathaway company
   c. Owens Corning
   d. Substitutions: Under provisions of Section 012500 “Substitution Procedures”.

2.4 ROOF VENTS

A. Rigid Ridge Vent: Manufacturer's standard, rigid section high-density polypropylene or other UV-stabilized plastic ridge vent for use under ridge shingles.

1. Manufacturers: Subject to compliance with requirements, available manufacturers offering products that may be incorporated into the Work include, but are not limited to, the following:

a. Air Vent, Inc.; a Gibraltar Industries company
b. Cor-A-Vent, Inc.
c. Owens Corning
d. Substitutions: Under provisions of Section 012500 “Substitution Procedures”.

2.5 ACCESSORIES

A. Asphalt Roofing Cement: ASTM D 4586, Type II, asbestos free.

B. Roofing Nails: ASTM F 1667; aluminum, stainless-steel, copper, or hot-dip galvanized-steel wire shingle nails, minimum 0.120-inch-diameter, barbed shank, sharp-pointed, with a minimum 3/8-inch-diameter flat head and of sufficient length to penetrate ¾-inch into solid wood decking or extend at least 1/8-inch through plywood sheathing.

1. Where nails are in contact with metal flashing, use nails made from same metal as flashing.

2.6 METAL FLASHING AND TRIM

A. General: Comply with requirements in Section 076200 "Sheet Metal Flashing and Trim."

PART 3 - EXECUTION

3.1 EXAMINATION

A. Examine substrates, areas, and conditions, with Installer present, for compliance with requirements for installation tolerances and other conditions affecting performance of the Work.

1. Examine roof sheathing to verify that sheathing joints are supported by framing and blocking or metal clips and that installation is within flatness tolerances.
2. Verify that substrate is sound, dry, smooth, clean, sloped for drainage, and completely anchored; and that provision has been made for flashings and penetrations through asphalt shingles.

B. Prepare written report, endorsed by Installer, listing conditions detrimental to performance of the Work.

C. Proceed with installation only after unsatisfactory conditions have been corrected.

3.2 UNDERLAYMENT INSTALLATION

A. General: Comply with underlayment manufacturer's written installation instructions applicable to products and applications indicated unless more stringent requirements apply.

B. Self-Adhering Sheet Underlayment: Install, wrinkle free, on roof deck. Comply with low-temperature installation restrictions of underlayment manufacturer if applicable. Install lapped in direction that sheds water. Lap sides not less than 3½ inches. Lap ends not less than 6 inches staggered 24 inches between courses. Roll laps with roller. Cover underlayment within seven (7) days.

3.3 METAL FLASHING INSTALLATION

A. General: Install metal flashings and other sheet metal to comply with requirements in Section 076200 "Sheet Metal Flashing and Trim."

3.4 ASPHALT SHINGLE INSTALLATION

A. General: Install asphalt shingles according to manufacturer's written instructions and asphalt shingle recommendations in NRCA's "The NRCA Roofing and Waterproofing Manual."

B. Install starter strip along lowest roof edge, consisting of an asphalt shingle strip with tabs removed with self-sealing strip face up at roof edge.

1. Extend asphalt shingles ½-inch over fasciae at eaves and rakes.
2. Install starter strip along rake edge.

C. Install first and remaining courses of asphalt shingles stair-stepping diagonally across roof deck with manufacturer's recommended offset pattern at succeeding courses, maintaining uniform exposure.

D. Fasten asphalt shingle strips with a minimum of four (4) roofing nails located according to manufacturer's written instructions.

1. Where roof slope is less than 4:12, seal asphalt shingles with asphalt roofing cement spots.

E. Open Valleys: Cut and fit asphalt shingles at open valleys, trimming upper concealed corners of shingle strips. Maintain uniform width of exposed open valley from highest to lowest point.

1. Set valley edge of asphalt shingles in a 3-inch-wide bed of asphalt roofing cement.
2. Do not nail asphalt shingles to metal open-valley flashings.

F. Ridge Vents: Install continuous ridge vents over asphalt shingles according to manufacturer's written instructions. Fasten with roofing nails of sufficient length to penetrate sheathing.

G. Hip and Ridge Shingles: Maintain same exposure of cap shingles as roofing shingle exposure. Lap cap shingles at ridges to shed water away from direction of prevailing winds. Fasten with roofing nails of sufficient length to penetrate sheathing.

1. Fasten ridge cap asphalt shingles to cover ridge vent without obstructing airflow.

END OF SECTION 073113

SECTION 074113.16 - STANDING-SEAM METAL ROOF PANELS

PART 1 - GENERAL

1.1 RELATED DOCUMENTS

A. Drawings and general provisions of the Contract, including General and Supplementary Conditions and Division 01 Specification Sections, apply to this Section.

1.2 SUMMARY

A. Section Includes:

1. Standing-seam metal roof panels.

B. Related Sections:

1. Section 077253 "Snow Guards" for prefabricated devices designed to hold snow on the roof surface, allowing it to melt and drain off slowly.

1.3 PREINSTALLATION MEETINGS

A. Preinstallation Conference: Conduct conference at Project site.

1.4 ACTION SUBMITTALS

A. Product Data: For standing-seam metal roof panels. Include construction details, material descriptions, seam installation instructions, dimensions of individual components and profiles, and finishes for each type of panel and accessory.

B. Shop Drawings:

1. Include fabrication and installation layouts of metal panels; details of edge conditions, joints, panel profiles, corners, anchorages, attachment system, trim, flashings, closures, and accessories; and special details.
2. Accessories: Include details of the flashing, trim, and anchorage systems, at a scale of not less than 1½ inches per 12 inches.

C. Samples: For each type of exposed finish required, prepared on Samples of size indicated below.

1. Metal Panels: 12 inches long by actual panel width. Include clips, fasteners, closures, and other metal panel accessories.

1.5 INFORMATIONAL SUBMITTALS

A. Qualification Data: For Installer.

B. Product Test Reports: For standing-seam metal roof panels, for tests performed by a qualified testing agency.

C. Field quality-control reports.

D. Sample Warranties: For special warranties.

1.6 CLOSEOUT SUBMITTALS

A. Maintenance Data: For metal panels to include in maintenance manuals.

1.7 QUALITY ASSURANCE

A. Installer Qualifications:

1. An entity that employs installers and supervisors who are trained and approved by manufacturer.

B. UL-Certified, Portable Roll-Forming Equipment: UL-certified, portable roll-forming equipment capable of producing metal panels warranted by manufacturer to be the same as factory-formed products. Maintain UL certification of portable roll-forming equipment for duration of work.

1.8 DELIVERY, STORAGE, AND HANDLING

A. Deliver components, metal panels, and other manufactured items so as not to be damaged or deformed. Package metal panels for protection during transportation and handling.

B. Unload, store, and erect metal panels in a manner to prevent bending, warping, twisting, and surface damage.

C. Stack metal panels horizontally on platforms or pallets, covered with suitable weathertight and ventilated covering. Store metal panels to ensure dryness, with positive slope for drainage of water. Do not store metal panels in contact with other materials that might cause staining, denting, or other surface damage.

D. Retain strippable protective covering on metal panels during installation.

1.9 FIELD CONDITIONS

A. Weather Limitations: Proceed with installation only when existing and forecasted weather conditions permit assembly of metal panels to be performed according to manufacturers' written instructions and warranty requirements.

1.10 COORDINATION

A. Coordinate sizes and locations of roof curbs, equipment supports, and roof penetrations with actual equipment provided.

B. Coordinate metal panel installation with rain drainage work, flashing, trim, construction of soffits, and other adjoining work to provide a leakproof, secure, and noncorrosive installation.

1.11 WARRANTY

A. Special Warranty: Manufacturer's standard form in which manufacturer agrees to repair or replace components of metal panel systems that fail in materials or workmanship within specified warranty period.

1. Failures include, but are not limited to, the following:

a. Structural failures including rupturing, cracking, or puncturing.
b. Deterioration of metals and other materials beyond normal weathering.

2. Warranty Period: Twenty (20) years, non-prorated, no-dollar-limit, from date of Substantial Completion.

B. Special Warranty on Panel Finishes: Manufacturer's standard form in which manufacturer agrees to repair finish or replace metal panels that show evidence of deterioration of factory-applied finishes within specified warranty period.

1. Exposed Panel Finish: Deterioration includes, but is not limited to, the following:

a. Color fading more than 5 Hunter units when tested according to ASTM D 2244.
b. Chalking in excess of a No. 8 rating when tested according to ASTM D 4214.
c. Cracking, checking, peeling, or failure of paint to adhere to bare metal.

2. Finish Warranty Period: Twenty (20) years from date of Substantial Completion.

C. Roofing Installer's Warranty: Signed by Installer, in which Installer agrees to repair or replace components of roofing system that fail in materials or workmanship within specified warranty period.

1. Warranty Period: Two (2) years from date of Substantial Completion.

PART 2 - PRODUCTS

2.1 PERFORMANCE REQUIREMENTS

A. Structural Performance: Provide metal panel systems capable of withstanding the effects of the following loads, based on testing according to ASTM E 1592:

1. Wind and Other Design Loads: As indicated on Drawings and as required by Code.
2. Design and size components to withstand dead and live loads caused by positive and negative wind pressure for cladding as calculated in accordance with Section 1504.3 of the 2005 Connecticut State Building Code (CSBC).

B. Air Infiltration: Air leakage of not more than 0.06 cfm/sq. ft. when tested according to ASTM E 1680 or ASTM E 283 at the following test-pressure difference:

1. Test-Pressure Difference: 1.57 lbf/sq. ft.

C. Water Penetration under Static Pressure: No water penetration when tested according to ASTM E 1646 or ASTM E 331 at the following test-pressure difference:

1. Test-Pressure Difference: 6.24 lbf/sq. ft.

D. Thermal Movements: Allow for thermal movements from ambient and surface temperature changes by preventing buckling, opening of joints, overstressing of components, failure of joint sealants, failure of connections, and other detrimental effects. Base calculations on surface temperatures of materials due to both solar heat gain and nighttime-sky heat loss.

1. Temperature Change (Range): 120 deg F (67 deg C), ambient; 180 deg F (100 deg C), material surfaces.

2.2 STANDING-SEAM METAL ROOF PANELS

A. Provide factory-formed metal roof panels designed to be installed by lapping and interconnecting raised side edges of adjacent panels with joint type indicated and mechanically attaching panels to supports using concealed clips in side laps. Include clips, cleats, pressure plates, and accessories required for weathertight installation.

1. Aluminum Panel Systems: Unless more stringent requirements are indicated, comply with ASTM E 1637.

B. Vertical-Rib, Seamed-Joint, Standing-Seam Metal Roof Panels: Formed with vertical ribs at panel edges and intermediate stiffening flat ribs symmetrically spaced between ribs; designed for sequential installation by mechanically attaching panels to supports using concealed clips located under one (1) side of panels, engaging opposite edge of adjacent panels, and mechanically seaming panels together.

1. Basis-of-Design:

a. ATAS International, Inc.; **1½" Field-Lok**

2. Acceptable Manufacturers:

a. Berridge Manufacturing Co.
b. Centria
c. Innovative Metals Company
d. Firestone Building Products, LLC
e. Garland Company, Inc. (The)
f. Merchant & Evans Inc.
g. Peterson Aluminum Corporation
h. Substitutions: Under provisions of Section 012500 "Substitution Procedures".

3. Aluminum Sheet: Coil-coated sheet, ASTM B 209, alloy as standard with manufacturer, with temper as required to suit forming operations and structural performance required.

a. Thickness: 0.040-inch.
b. Surface: Smooth, flat finish.
c. Exterior Finish: Two-coat fluoropolymer.
d. Color: As selected by Architect and Owner from manufacturer's entire range.

4. Clips: Manufacturer's standard to accommodate thermal movement.

a. Material for Aluminum Panels: Minimum 16-gauge, Type 316L stainless-steel.

5. Joint Type: Single folded.
6. Panel Coverage: inches.
7. Panel Height: 1½ inches.

2.3 UNDERLAYMENT MATERIALS

A. Self-Adhering, High-Temperature Underlayment: Provide self-adhering, cold-applied, sheet underlayment, a minimum of 30 mils thick, consisting of slip-resistant, polyethylene-film top surface laminated to a layer of butyl or SBS-modified asphalt adhesive, with release-paper backing. Provide primer when recommended by underlayment manufacturer.

1. Thermal Stability: Stable after testing at 240 deg F (116 deg C); ASTM D 1970.
2. Low-Temperature Flexibility: Passes after testing at minus 20 deg F (29 deg C); ASTM D 1970.

2.4 MISCELLANEOUS MATERIALS

A. Miscellaneous Metal Subframing and Furring: ASTM C 645; cold-formed, metallic-coated steel sheet, ASTM A 653, G90 coating designation or ASTM A792, Class AZ50 coating designation unless otherwise indicated. Provide manufacturer's standard sections as required for support and alignment of metal panel system.

B. Panel Accessories: Provide components required for a complete, weathertight panel system including trim, copings, fasciae, mullions, sills, corner units, clips, flashings, sealants, gaskets, fillers, closure strips, and similar items. Match material and finish of metal panels unless otherwise indicated.

1. Closures: Provide closures at eaves and ridges, fabricated of same metal as metal panels.
2. Backing Plates: Provide metal backing plates at panel end splices, fabricated from material recommended by manufacturer.
3. Closure Strips: Closed-cell, expanded, cellular, rubber or crosslinked, polyolefin-foam or closed-cell laminated polyethylene; minimum 1-inch-thick, flexible closure strips; cut or pre-molded to match metal panel profile. Provide closure strips where indicated or necessary to ensure weathertight construction.

C. Flashing and Trim: Provide flashing and trim formed from same material as metal panels as required to seal against weather and to provide finished appearance. Locations include, but are not limited to, eaves, rakes, corners, bases, framed openings, ridges, fasciae, and fillers. Finish flashing and trim with same finish system as adjacent metal panels.

D. Panel Fasteners: Self-tapping, stainless-steel screws designed to withstand design loads. All exposed fasteners, if required, shall be factory painted to match the color of the panels.

E. Panel Sealants: Provide sealant type recommended by manufacturer that are compatible with panel materials, are non-staining, and do not damage panel finish.

1. Sealant Tape: Pressure-sensitive, one hundred percent (100%) solids, gray polyisobutylene compound sealant tape with release-paper backing. Provide permanently elastic, non-sag, nontoxic, non-staining tape ½-inch-wide and 1/8-inch-thick.

2. Joint Sealant: ASTM C 920; elastomeric polyurethane or silicone sealant; of type, grade, class, and use classifications required to seal joints in metal panels and remain weathertight; and as recommended in writing by metal panel manufacturer.
3. Butyl-Rubber-Based, Solvent-Release Sealant: ASTM C 1311.

2.5 FABRICATION

A. Fabricate and finish metal panels and accessories at the factory, by manufacturer's standard procedures and processes, as necessary to fulfill indicated performance requirements demonstrated by laboratory testing. Comply with indicated profiles and with dimensional and structural requirements.

B. On-Site Fabrication: Subject to compliance with requirements of this Section, metal panels may be fabricated on-site using UL-certified, portable roll-forming equipment if panels are of same profile and warranted by manufacturer to be equal to factory-formed panels. Fabricate according to equipment manufacturer's written instructions and to comply with details shown.

C. Provide panel profile, including major ribs and intermediate stiffening ribs, if any, for full length of panel.

D. Fabricate metal panel joints with factory-installed captive gaskets or separator strips that provide a weathertight seal and prevent metal-to-metal contact, and that minimize noise from movements.

E. Sheet Metal Flashing and Trim: Fabricate flashing and trim to comply with manufacturer's recommendations and recommendations in SMACNA's "Architectural Sheet Metal Manual" that apply to design, dimensions, metal, and other characteristics of item indicated.

1. Form exposed sheet metal accessories that are without excessive oil canning, buckling, and tool marks and that are true to line and levels indicated, with exposed edges folded back to form hems.
2. Seams for Aluminum: Fabricate nonmoving seams with flat-lock seams. Form seams and seal with epoxy seam sealer. Rivet joints for additional strength.
3. Sealed Joints: Form non-expansion, but movable, joints in metal to accommodate sealant and to comply with SMACNA standards.
4. Conceal fasteners and expansion provisions where possible. Exposed fasteners are not allowed on faces of accessories exposed to view.
5. Fabricate cleats and attachment devices from same material as accessory being anchored or from compatible, noncorrosive metal recommended in writing by metal panel manufacturer.

    a. Size: As recommended by SMACNA's "Architectural Sheet Metal Manual" or metal panel manufacturer for application, but not less than thickness of metal being secured.

2.6 FINISHES

A. Protect mechanical and painted finishes on exposed surfaces from damage by applying a strippable, temporary protective covering before shipping.

B. Appearance of Finished Work: Variations in appearance of abutting or adjacent pieces are acceptable if they are within one-half of the range of approved Samples. Noticeable variations in same piece are unacceptable. Variations in appearance of other components are acceptable if they are within the range of approved Samples and are assembled or installed to minimize contrast.

C. Aluminum Panels and Accessories:

1. Two-Coat Fluoropolymer: AAMA 620. Fluoropolymer finish containing not less than seventy percent (70%) PVDF resin by weight in color coat. Prepare, pretreat, and apply coating to exposed metal surfaces to comply with coating and resin manufacturers' written instructions.

PART 3 - EXECUTION

3.1 EXAMINATION

A. Examine substrates, areas, and conditions, with Installer present, for compliance with requirements for installation tolerances, metal panel supports, and other conditions affecting performance of the Work.

1. Examine solid roof sheathing to verify that sheathing joints are supported by framing or blocking, and that installation is within flatness tolerances required by metal roof panel manufacturer.

a. Verify that air- or water-resistive barriers have been installed over sheathing or backing substrate to prevent air infiltration or water penetration.

B. Examine roughing-in for components and systems penetrating metal panels to verify actual locations of penetrations relative to seam locations of metal panels before installation.

C. Proceed with installation only after unsatisfactory conditions have been corrected.

3.2 PREPARATION

A. Miscellaneous Supports: Install subframing, furring, and other miscellaneous panel support members and anchorages according to ASTM C 754 and metal panel manufacturer's written recommendations.

3.3 INSTALLATION OF UNDERLAYMENT

A. Self-Adhering Sheet Underlayment: Apply primer if required by manufacturer. Comply with temperature restrictions of underlayment manufacturer for installation. Apply at locations indicated below, wrinkle free, in shingle fashion to shed water, and with end laps of not less than 6 inches staggered 24 inches between courses. Overlap side edges not less than 3½ inches. Roll laps with roller. Cover underlayment within fourteen (14) days.

1. Apply over the entire roof surface.

B. Flashings: Install flashings to cover underlayment to comply with requirements specified in Section 076200 "Sheet Metal Flashing and Trim."

3.4 INSTALLATION OF STANDING-SEAM METAL ROOF PANELS

A. Install metal panels according to manufacturer's written instructions in orientation, sizes, and locations indicated. Install panels perpendicular to supports unless otherwise indicated. Anchor metal panels and other components of the Work securely in place, with provisions for thermal and structural movement.

1. Shim or otherwise plumb substrates receiving metal panels.
2. Flash and seal metal panels at perimeter of all openings. Fasten with self-tapping screws. Do not begin installation until air- or water-resistive barriers and flashings that will be concealed by metal panels are installed.
3. Install screw fasteners in predrilled holes.
4. Locate and space fastenings in uniform vertical and horizontal alignment.
5. Install flashing and trim as metal panel work proceeds.
6. Locate panel splices over, but not attached to, structural supports. Stagger panel splices and end laps to avoid a four-panel lap splice condition.
7. Align bottoms of metal panels and fasten with blind rivets, bolts, or self-tapping screws. Fasten flashings and trim around openings and similar elements with self-tapping screws.
8. Provide weathertight escutcheons for pipe- and conduit-penetrating panels.

B. Fasteners:

1. Aluminum Panels: Use aluminum or stainless-steel fasteners for surfaces exposed to the exterior; use aluminum or galvanized-steel fasteners for surfaces exposed to the interior.

C. Anchor Clips: Anchor metal roof panels and other components of the Work securely in place, using manufacturer's approved fasteners according to manufacturers' written instructions.

D. Metal Protection: Where dissimilar metals contact each other or corrosive substrates, protect against galvanic action as recommended in writing by metal panel manufacturer.

E. Standing-Seam Metal Roof Panel Installation: Fasten metal roof panels to supports with concealed clips at each standing-seam joint at location, spacing, and with fasteners recommended in writing by manufacturer.

1. Install clips to supports with self-tapping fasteners.
2. Install pressure plates at locations indicated in manufacturer's written installation instructions.
3. Seamed Joint: Crimp standing seams with manufacturer-approved, motorized seamer tool so clip, metal roof panel, and factory-applied sealant are completely engaged.

F. Accessory Installation: Install accessories with positive anchorage to building and weathertight mounting and provide for thermal expansion. Coordinate installation with flashings and other components.

1. Install components required for a complete metal panel system including trim, copings, corners, seam covers, flashings, sealants, gaskets, fillers, closure strips, and similar items. Provide types indicated by metal roof panel manufacturers; or, if not indicated, types recommended by metal roof panel manufacturer.

G. Flashing and Trim: Comply with performance requirements, manufacturer's written installation instructions and approved Shop Drawings, and SMACNA's "Architectural Sheet Metal Manual." Provide concealed fasteners where possible and set units true to line and level as indicated. Install work with laps, joints, and seams that will be permanently watertight and weather resistant.

1. Install exposed flashing and trim that is without buckling and tool marks, and that is true to line and levels indicated, with exposed edges folded back to form hems. Install sheet metal flashing and trim to fit substrates and achieve waterproof and weather-resistant performance.
2. Expansion Provisions: Provide for thermal expansion of exposed flashing and trim. Space movement joints at a maximum of 10 feet with no joints allowed within 24 inches of corner or intersection. Where lapped expansion provisions cannot be used or would not be sufficiently weather resistant and waterproof, form expansion joints of intermeshing hooked flanges, not less than 1-inch-deep, filled with mastic sealant (concealed within joints).

H. Pipe Flashing: Form flashing around pipe penetration and metal roof panels. Fasten and seal to metal roof panels as recommended by manufacturer.

3.5 ERECTION TOLERANCES

A. Installation Tolerances: Shim and align metal panel units within installed tolerance of ¼-inch in 20 feet on slope and location lines as indicated and within 1/8-inch offset of adjoining faces and of alignment of matching profiles. Refer to manufacturer’s product data for specific tolerances.

3.6 FIELD QUALITY CONTROL

A. Manufacturer's Field Service: Engage a factory-authorized service representative to test and inspect metal roof panel installation, including accessories. Report results in writing.

B. Remove and replace applications of metal roof panels where tests and inspections indicate that they do not comply with specified requirements.

C. Additional tests and inspections, at Contractor's expense, are performed to determine compliance of replaced or additional work with specified requirements.

D. Prepare test and inspection reports.

3.7 CLEANING AND PROTECTION

A. Remove temporary protective coverings and strippable films, if any, as metal panels are installed, unless otherwise indicated in manufacturer's written installation instructions. On completion of metal panel installation, clean finished surfaces as recommended by metal panel manufacturer. Maintain in a clean condition during construction.

B. Replace metal panels that have been damaged or have deteriorated beyond successful repair by finish touchup or similar minor repair procedures.

END OF SECTION 074113.16

SECTION 074646 - FIBER CEMENT SIDING

PART 1 - GENERAL

1.1 RELATED DOCUMENTS

A. Drawings and general provisions of the Contract, including General and Supplementary Conditions and Division 01 Specification Sections, apply to this Section.

1.2 SUMMARY

A. Section includes fiber cement siding and soffit.

B. Related Requirements:

1. Section 061000 "Rough Carpentry" for wood furring, grounds, nailers, and blocking.
2. Section 072500 "Weather Barriers" for weather-resistive barriers.

1.3 COORDINATION

A. Coordinate siding installation with flashings and other adjoining construction to ensure proper sequencing.

1.4 PREINSTALLATION MEETINGS

A. Preinstallation Conference: Conduct conference at Project site.

1.5 ACTION SUBMITTALS

A. Product Data: For each type of product. Include construction details, material descriptions, dimensions of individual components and profiles, and finishes.

B. Samples: For each type, color, texture, and pattern required.

1. 12-inch-long-by-actual-width Sample of siding.
2. 12-inch-long-by-actual-width Sample of soffit.
3. 12-inch-long-by-actual-width Samples of trim and accessories.

1.6 INFORMATIONAL SUBMITTALS

A. Product Certificates: For each type of fiber-cement siding and soffit.

B. Product Test Reports: Based on evaluation of comprehensive tests performed by a qualified testing agency, for fiber-cement siding.

C. Research/Evaluation Reports: For each type of fiber-cement siding required, from ICC-ES.

D. Sample Warranty: For special warranty.

1.7 CLOSEOUT SUBMITTALS

A. Maintenance Data: For each type of product, including related accessories, to include in maintenance manuals.

1.8 MAINTENANCE MATERIAL SUBMITTALS

A. Furnish extra materials that match products installed and that are packaged with protective covering for storage and identified with labels describing contents.

1. Furnish full lengths of fiber-cement siding and soffit including related accessories, in a quantity equal to two percent (2%) of amount installed.

1.9 DELIVERY, STORAGE, AND HANDLING

A. Deliver and store packaged materials in original containers with labels intact until time of use.

B. Store materials on elevated platforms, under cover, and in a dry location.

1.10 WARRANTY

A. Special Warranty: Manufacturer agrees to repair or replace products that fail in materials or workmanship within specified warranty period.

1. Failures include, but are not limited to, the following:

a. Structural failures including cracking and deforming.
b. Deterioration of materials beyond normal weathering.

2. Warranty Period: Thirty (30) years from date of Substantial Completion.

PART 2 - PRODUCTS

2.1 MANUFACTURERS

A. Source Limitations: Obtain products, including related accessories, from single source from single manufacturer.

2.2 FIBER-CEMENT SIDING

A. General: ASTM C 1186, Type A, Grade II, fiber-cement board, noncombustible when tested according to ASTM E 136; with a flame-spread index of 25 or less when tested according to ASTM E 84.

1. Basis of Design:

a. James Hardie Building Products

1) **HardiShingle Straight Edge Panel**
2) **HardiePanel Vertical Siding Smooth**

2. Manufacturers:

a. Allura USA
b. Certainteed Corporation
c. Maxitile
d. Substitutions: Under provisions of Section 012500 “Substitution Procedures”.

B. Labeling: Provide fiber-cement siding that is tested and labeled according to ASTM C 1186 by a qualified testing agency acceptable to authorities having jurisdiction.

C. Nominal Thickness: Not less than ¼-inch.

D. Shingle Pattern: 7-inch exposure, 48-inch-wide, straight-edge notched sheets with wood-grain texture.

E. Panel Texture: 48-inch-wide sheets with smooth texture.

F. Colors: Factory-finished in two (2) colors, as selected by Architect and Owner from manufacturer’s entire range.

2.3 FIBER-CEMENT SOFFIT

A. General: ASTM C 1186, Type A, Grade II, fiber-cement board, noncombustible when tested according to ASTM E 136; with a flame-spread index of 25 or less when tested according to ASTM E 84.

1. Basis of Design:

a. James Hardie Building Products; **Hardie Soffit Panels Vertical Siding Non-Vented Smooth**

2. Manufacturers:

a. Allura USA
b. Certainteed Corporation
c. Maxitile
d. Substitutions: Under provisions of Section 012500 “Substitution Procedures”.

B. Nominal Thickness: Not less than ¼-inch.

C. Pattern: 24-inch-wide sheets with smooth texture.

D. Colors: Factory-finished, as selected by Architect and Owner from manufacturer’s entire range.

2.4 ACCESSORIES

A. Siding Accessories, General: Provide starter strips, edge trim, outside and inside corner caps, and other items as recommended by siding manufacturer for building configuration.

1. Provide accessories matching color and texture of adjacent siding unless otherwise indicated.

B. Batten: Boards 2½ inches wide with smooth texture, ¾-inch-thick, nominal.

1. Basis-of-Design: James Hardie Building Products; **HardieTrim Boards Smooth Batten Boards**

C. Flashing: Provide aluminum flashing complying with Section 076200 "Sheet Metal Flashing and Trim" at window and door heads and where indicated.

D. Fasteners:

1. For fastening to wood, use ribbed bugle-head screws of sufficient length to penetrate a minimum of 1-inch into substrate.
2. For fastening fiber cement, use stainless-steel fasteners.

E. Aluminum Trim: Extruded accessories of profiles and dimensions indicated.

1. Basis-of-Design:

a. Fry Reglet Corp.

2. Manufacturers: Subject to compliance with requirements, available manufacturers offering products that may be incorporated into the Work include, but are not limited to, the following:

a. Gordon, Inc.
b. Pittcon Industries
c. Substitutions: Under provisions of Section 012500 “Substitution Procedures”.

3. Aluminum: Alloy and temper with not less than the strength and durability properties of ASTM B 221, Alloy 6063-T5.
4. Finish: Powder coat, <u>to match adjacent fiber cement</u>.

PART 3 - EXECUTION

3.1 EXAMINATION

A. Examine substrates for compliance with requirements for installation tolerances and other conditions affecting performance of fiber-cement siding and related accessories.

B. Proceed with installation only after unsatisfactory conditions have been corrected.

3.2 PREPARATION

A. Clean substrates of projections and substances detrimental to application.

3.3 INSTALLATION

A. General: Comply with manufacturer's written installation instructions applicable to products and applications indicated unless more stringent requirements apply.

1. Do not install damaged components.

2. Install fasteners no more than 16 inches o.c.
3. Provide minimum 6-inch clearance between panel system and finished grade.

B. Cut panels to fit around penetrations with maximum ¼-inch gaps. Smooth and seal cut edges.

C. Place fasteners exposed, minimum 3/8-inch from panel edges and 2 inches from top and bottom edges at panel corners, in orderly fastening pattern.

D. Install joint sealants as specified in Section 079200 "Joint Sealants" and to produce a weathertight installation.

E. Aluminum Trim: Install in locations indicated on Drawings.

3.4 ADJUSTING AND CLEANING

A. Remove damaged, improperly installed, or otherwise defective materials and replace with new materials complying with specified requirements.

B. Clean finished surfaces according to manufacturer's written instructions and maintain in a clean condition during construction.

END OF SECTION 074646

SECTION 076200 - SHEET METAL FLASHING AND TRIM

PART 1 - GENERAL

1.1 RELATED DOCUMENTS

A. Drawings and general provisions of the Contract, including General and Supplementary Conditions and Division 01 Specification Sections, apply to this Section.

1.2 SUMMARY

A. Section Includes:

1. Formed roof-drainage sheet metal fabrications.
2. Formed steep-slope roof sheet metal fabrications.
3. Formed brake metal.

B. Related Requirements:

1. Section 061000 "Rough Carpentry" for wood nailers, curbs, and blocking.
2. Section 077200 "Roof Accessories" for equipment supports, roof hatches, vents, and other manufactured roof accessory units.

1.3 COORDINATION

A. Coordinate sheet metal flashing and trim layout and seams with sizes and locations of penetrations to be flashed, and joints and seams in adjacent materials.

B. Coordinate sheet metal flashing and trim installation with adjoining roofing and wall materials, joints, and seams to provide leak-proof, secure, and noncorrosive installation.

1.4 ACTION SUBMITTALS

A. Product Data: For each type of product.

1. Include construction details, material descriptions, dimensions of individual components and profiles, and finishes for each manufactured product and accessory.

B. Shop Drawings: For sheet metal flashing and trim.

1. Include plans, elevations, sections, and attachment details.
2. Detail fabrication and installation layouts, expansion-joint locations, and keyed details. Distinguish between shop- and field-assembled work.
3. Include identification of material, thickness, weight, and finish for each item and location in Project.
4. Include details for forming, including profiles, shapes, seams, and dimensions.
5. Include details for joining, supporting, and securing, including layout and spacing of fasteners, cleats, clips, and other attachments. Include pattern of seams.
6. Include details of termination points and assemblies.
7. Include details of roof-penetration flashing.

8. Include details of edge conditions, including eaves, ridges, valleys, rakes, crickets, and counterflashings as applicable.
9. Include details of special conditions.
10. Include details of connections to adjoining work.
11. Detail formed flashing and trim at scale of not less than 3 inches per 12 inches (1:5).

C. Samples: For each type of sheet metal and accessory indicated with factory-applied finishes.

1.5 INFORMATIONAL SUBMITTALS

A. Qualification Data: For fabricator.

B. Product Test Reports: For each product, for tests performed by a qualified testing agency.

C. Sample Warranty: For special warranty.

1.6 CLOSEOUT SUBMITTALS

A. Maintenance Data: For sheet metal flashing and trim, and its accessories, to include in maintenance manuals.

1.7 QUALITY ASSURANCE

A. Fabricator Qualifications: Employs skilled workers who custom fabricate sheet metal flashing and trim similar to that required for this Project and whose products have a record of successful in-service performance.

1.8 DELIVERY, STORAGE, AND HANDLING

A. Do not store sheet metal flashing and trim materials in contact with other materials that might cause staining, denting, or other surface damage. Store sheet metal flashing and trim materials away from uncured concrete and masonry.

B. Protect strippable protective covering on sheet metal flashing and trim from exposure to sunlight and high humidity, except to extent necessary for period of sheet metal flashing and trim installation.

1.9 WARRANTY

A. Special Warranty on Finishes: Manufacturer agrees to repair finish or replace sheet metal flashing and trim that shows evidence of deterioration of factory-applied finishes within specified warranty period.

1. Exposed Panel Finish: Deterioration includes, but is not limited to, the following:

a. Color fading more than 5 Hunter units when tested according to ASTM D 2244.
b. Chalking in excess of a No. 8 rating when tested according to ASTM D 4214.
c. Cracking, checking, peeling, or failure of paint to adhere to bare metal.

2. Finish Warranty Period: Twenty (20) years from date of Substantial Completion.

PART 2 - PRODUCTS

2.1 PERFORMANCE REQUIREMENTS

A. General: Sheet metal flashing and trim assemblies shall withstand wind loads, structural movement, thermally induced movement, and exposure to weather without failure due to defective manufacture, fabrication, installation, or other defects in construction. Completed sheet metal flashing and trim shall not rattle, leak, or loosen, and shall remain watertight.

B. Sheet Metal Standard for Flashing and Trim: Comply with NRCA's "The NRCA Roofing Manual" and SMACNA's "Architectural Sheet Metal Manual" requirements for dimensions and profiles shown unless more stringent requirements are indicated.

C. Wind Design Standard: Manufacture and install roof edge flashings tested according to Chapter 16 of the International Building Code and capable of resisting the following design pressure:

1. Design Pressure: As indicated on Drawings.

D. Thermal Movements: Allow for thermal movements from ambient and surface temperature changes to prevent buckling, opening of joints, overstressing of components, failure of joint sealants, failure of connections, and other detrimental effects. Base calculations on surface temperatures of materials due to both solar heat gain and nighttime-sky heat loss.

1. Temperature Change: 120 deg F (67 deg C), ambient; 180 deg F (100 deg C), material surfaces.

2.2 SHEET METALS

A. General: Protect mechanical and other finishes on exposed surfaces from damage by applying strippable, temporary protective film before shipping.

B. Aluminum Sheet: ASTM B 209, alloy as standard with manufacturer for finish required, with temper as required to suit forming operations and performance required; with smooth, flat surface.

1. Exposed Coil-Coated Finish:

a. Two-Coat Fluoropolymer: AAMA 620. Fluoropolymer finish containing not less than seventy percent (70%) PVDF resin by weight in color coat. Prepare, pretreat, and apply coating to exposed metal surfaces to comply with coating and resin manufacturers' written instructions.

2. Color: As selected by Architect and Owner from manufacturer's entire range.

C. Stainless-Steel Sheet: ASTM A 240 or ASTM A 666, Type 304, dead soft, fully annealed; with smooth, flat surface.

1. Finish: 2D (dull, cold rolled).

2.3 UNDERLAYMENT MATERIALS

A. Felt: ASTM D 226, Type II (No. 30), asphalt-saturated organic felt; nonperforated.

B. Slip Sheet: Rosin-sized building paper, 3 lb./100 sq. ft. minimum.

2.4 MISCELLANEOUS MATERIALS

A. General: Provide materials and types of fasteners, protective coatings, sealants, and other miscellaneous items as required for complete sheet metal flashing and trim installation and as recommended by manufacturer of primary sheet metal unless otherwise indicated.

B. Fasteners: Wood screws, annular threaded nails, self-tapping screws, self-locking rivets and bolts, and other suitable fasteners designed to withstand design loads and recommended by manufacturer of primary sheet metal.

1. General: Blind fasteners or self-drilling screws, gasketed, with hex-washer head.

a. Exposed Fasteners: Heads matching color of sheet metal using plastic caps or factory-applied coating. Provide metal-backed EPDM or PVC sealing washers under heads of exposed fasteners bearing on weather side of metal.
b. Blind Fasteners: High-strength aluminum or stainless-steel rivets suitable for metal being fastened.
c. Spikes and Ferrules: Same material as gutter; with spike with ferrule matching internal gutter width.

2. Fasteners for Aluminum Sheet: Aluminum or Series 300 stainless-steel.
3. Fasteners for Stainless-Steel Sheet: Series 300 stainless-steel.

C. Solder:

1. For Stainless-Steel: ASTM B 32, Grade Sn60, with acid flux of type recommended by stainless-steel sheet manufacturer.

D. Sealant Tape: Pressure-sensitive, one hundred percent (100%) solids, polyisobutylene compound sealant tape with release-paper backing. Provide permanently elastic, non-sag, nontoxic, non-staining tape ½-inch-wide and 1/8-inch-thick.

E. Elastomeric Sealant: ASTM C 920, elastomeric polysulfide polymer sealant; of type, grade, class, and use classifications required to seal joints in sheet metal flashing and trim and remain watertight.

F. Butyl Sealant: ASTM C 1311, single-component, solvent-release butyl rubber sealant; polyisobutylene plasticized; heavy bodied for hooked-type expansion joints with limited movement.

G. Bituminous Coating: Cold-applied asphalt emulsion according to ASTM D 1187.

H. Asphalt Roofing Cement: ASTM D 4586, asbestos free, of consistency required for application.

2.5 FABRICATION, GENERAL

A. General: Custom fabricate sheet metal flashing and trim to comply with details shown and recommendations in cited sheet metal standard that apply to design, dimensions, geometry,

metal thickness, and other characteristics of item required. Fabricate sheet metal flashing and trim in shop to greatest extent possible.

1. Fabricate sheet metal flashing and trim in thickness or weight needed to comply with performance requirements, but not less than that specified for each application and metal.
2. Obtain field measurements for accurate fit before shop fabrication.
3. Form sheet metal flashing and trim to fit substrates without excessive oil canning, buckling, and tool marks; true to line, levels, and slopes; and with exposed edges folded back to form hems.
4. Conceal fasteners and expansion provisions where possible. Do not use exposed fasteners on faces exposed to view.

B. Fabrication Tolerances: Fabricate sheet metal flashing and trim that is capable of installation to a tolerance of ¼-inch in 20 feet on slope and location lines indicated on Drawings and within 1/8-inch offset of adjoining faces and of alignment of matching profiles.

C. Expansion Provisions: Form metal for thermal expansion of exposed flashing and trim.

1. Form expansion joints of intermeshing hooked flanges, not less than 1-inch-deep, filled with butyl sealant concealed within joints.
2. Use lapped expansion joints only where indicated on Drawings.

D. Sealant Joints: Where movable, nonexpansion-type joints are required, form metal to provide for proper installation of elastomeric sealant according to cited sheet metal standard.

E. Fabricate cleats and attachment devices from same material as accessory being anchored or from compatible, noncorrosive metal.

F. Fabricate cleats and attachment devices of sizes as recommended by cited sheet metal standard for application, but not less than thickness of metal being secured.

G. Seams: Fabricate nonmoving seams with flat-lock seams. Tin edges to be seamed, form seams, and solder.

H. Seams (Aluminum): Fabricate nonmoving seams with flat-lock seams. Form seams and seal with elastomeric sealant unless otherwise recommended by sealant manufacturer for intended use.

I. Do not use graphite pencils to mark metal surfaces.

2.6 ROOF-DRAINAGE SHEET METAL FABRICATIONS

A. Hanging Gutters: Fabricate to cross section required, complete with end pieces, outlet tubes, and other accessories as required. Fabricate in minimum 96-inch-long sections. Furnish flat-stock gutter brackets and twisted gutter spacers and straps fabricated from same metal as gutters, of size recommended by cited sheet metal standard but with thickness not less than twice the gutter thickness. Fabricate expansion joints, expansion-joint covers, and gutter accessories from same metal as gutters.

1. Gutter Profile: As indicated on Drawings.
2. Expansion Joints: Lap type.

3. Fabricate from the following materials:

a. Aluminum: 0.032-inch-thick, seamless.

B. Downspouts: Fabricate downspouts in rectangular profile and dimensions as indicated on Drawings, complete with mitered elbows. Furnish with metal hangers from same material as downspouts and anchors. Shop fabricate elbows.

1. Fabricate from the following materials:

a. Aluminum: 0.040-inch-thick.

2.7 STEEP-SLOPE ROOF SHEET METAL FABRICATIONS

A. Drip Edges: Fabricate from the following materials:

1. Aluminum: 0.032-inch-thick.

B. Eave, Rake, Ridge, and Hip Flashing: Fabricate from the following materials:

1. Aluminum: 0.032-inch-thick.

C. Roof-Penetration Flashing: Fabricate from the following materials:

1. Aluminum: 0.032-inch-thick.

2.8 MISCELLANEOUS SHEET METAL FABRICATIONS

A. Sill and Openings Flashing, Column Covers, Etc.: Fabricate from the following materials:

1. Aluminum: Thickness as indicated on Drawings.

B. Drip Edges: Extend at least 3 inches into wall and ½-inch out from wall, with outer edge bent down 30 degrees and hemmed. Fabricate from the following materials:

2. Stainless-Steel: 24-gauge-thick.

PART 3 - EXECUTION

3.1 EXAMINATION

A. Examine substrates, areas, and conditions, with Installer present, for compliance with requirements for installation tolerances, substrate, and other conditions affecting performance of the Work.

1. Verify compliance with requirements for installation tolerances of substrates.
2. Verify that substrate is sound, dry, smooth, clean, sloped for drainage, and securely anchored.

B. Proceed with installation only after unsatisfactory conditions have been corrected.

3.2 UNDERLAYMENT INSTALLATION

A. Felt Underlayment: Install felt underlayment, wrinkle free, using adhesive to minimize use of mechanical fasteners under sheet metal flashing and trim. Apply in shingle fashion to shed water, with lapped joints of not less than 2 inches.

B. Apply slip sheet, wrinkle free, directly on substrate before installing sheet metal flashing and trim.

3.3 INSTALLATION, GENERAL

A. General: Anchor sheet metal flashing and trim and other components of the Work securely in place, with provisions for thermal and structural movement. Use fasteners, protective coatings, separators, sealants, and other miscellaneous items as required to complete sheet metal flashing and trim system.

1. Install sheet metal flashing and trim true to line, levels, and slopes. Provide uniform, neat seams with minimum exposure of solder, welds, and sealant.
2. Install sheet metal flashing and trim to fit substrates and to result in watertight performance. Verify shapes and dimensions of surfaces to be covered before fabricating sheet metal.
3. Space cleats not more than 12 inches apart. Attach each cleat with at least two (2) fasteners. Bend tabs over fasteners.
4. Install exposed sheet metal flashing and trim with limited oil canning, and free of buckling and tool marks.
5. Torch cutting of sheet metal flashing and trim is not permitted.
6. Do not use graphite pencils to mark metal surfaces.

B. Metal Protection: Where dissimilar metals contact each other, or where metal contacts pressure-treated wood or other corrosive substrates, protect against galvanic action or corrosion by painting contact surfaces with bituminous coating or by other permanent separation as recommended by sheet metal manufacturer or cited sheet metal standard.

1. Coat concealed side of sheet metal flashing and trim with bituminous coating where flashing and trim contact wood, ferrous metal, or cementitious construction.
2. Underlayment: Where installing sheet metal flashing and trim directly on cementitious or wood substrates, install underlayment and cover with slip sheet.

C. Expansion Provisions: Provide for thermal expansion of exposed flashing and trim. Space movement joints at maximum of 10 feet with no joints within 24 inches of corner or intersection.

1. Form expansion joints of intermeshing hooked flanges, not less than 1-inch-deep, filled with sealant concealed within joints.
2. Use lapped expansion joints only where indicated on Drawings.

D. Fasteners: Use fastener sizes that penetrate wood blocking or sheathing not less than 1¼ inches for nails and not less than ¾ inch for wood screws.

E. Conceal fasteners and expansion provisions where possible in exposed work and locate to minimize possibility of leakage. Cover and seal fasteners and anchors as required for a tight installation.

F. Seal joints as required for watertight construction.

1. Use sealant-filled joints unless otherwise indicated. Embed hooked flanges of joint members not less than 1-inch into sealant. Form joints to completely conceal sealant. When ambient temperature at time of installation is between 40 and 70 deg F (4 and 21 deg C), set joint members for fifty percent (50%) movement each way. Adjust setting proportionately for installation at higher ambient temperatures. Do not install sealant-type joints at temperatures below 40 deg F (4 deg C).
2. Prepare joints and apply sealants to comply with requirements in Section 079200 "Joint Sealants."

G. Soldered Joints: Clean surfaces to be soldered, removing oils and foreign matter. Pre-tin edges of sheets with solder to width of 1½ inches; however, reduce pre-tinning where pre-tinned surface would show in completed Work.

1. Do not solder aluminum sheet.
2. Do not use torches for soldering.
3. Heat surfaces to receive solder, and flow solder into joint. Fill joint completely. Completely remove flux and spatter from exposed surfaces.
4. Stainless-Steel Soldering: Tin edges of uncoated sheets, using solder for stainless-steel and acid flux. Promptly remove acid flux residue from metal after tinning and soldering. Comply with solder manufacturer's recommended methods for cleaning and neutralization.

H. Rivets: Rivet joints in uncoated aluminum and zinc where indicated and where necessary for strength.

3.4 ROOF-DRAINAGE SYSTEM INSTALLATION

A. General: Install sheet metal roof-drainage items to produce complete roof-drainage system according to cited sheet metal standard unless otherwise indicated. Coordinate installation of roof perimeter flashing with installation of roof-drainage system.

B. Hanging Gutters: Join sections with soldered joints. Provide for thermal expansion. Attach gutters at eave or fascia to firmly anchor them in position. Provide end closures and seal watertight with sealant. Slope to downspouts.

1. Fasten gutter spacers to front and back of gutter.
2. Anchor and loosely lock back edge of gutter to continuous eave or apron flashing.
3. Anchor gutter with gutter brackets spaced not more than 24 inches apart to roof deck, unless otherwise indicated, and loosely lock to front gutter bead.
4. Install gutter with expansion joints at locations not exceeding 50 feet apart. Install expansion-joint caps.

C. Downspouts: Join sections with 1½ inch telescoping joints.

1. Provide hangers with fasteners designed to hold downspouts securely to walls. Locate hangers at existing locations minimum, but at top and bottom and at approximately 60 inches o.c.
2. Connect downspouts to underground drainage system.

3.5 ROOF FLASHING INSTALLATION

A. General: Install sheet metal flashing and trim to comply with performance requirements and cited sheet metal standard. Provide concealed fasteners where possible, and set units true to line, levels, and slopes. Install work with laps, joints, and seams that are permanently watertight and weather resistant.

B. Fasciae and Other Exposed Flashings: Anchor to resist uplift and outward forces according to recommendations in cited sheet metal standard unless otherwise indicated. Interlock bottom edge of roof edge flashing with continuous cleat anchored to substrate at staggered 3-inch centers.

C. Pipe or Post Counterflashing: Install counterflashing umbrella with close-fitting collar with top edge flared for elastomeric sealant, extending minimum of 4 inches over base flashing. Install stainless-steel draw band and tighten.

D. Roof-Penetration Flashing: Coordinate installation of roof-penetration flashing with installation of roofing and other items penetrating roof. Seal with elastomeric sealant and clamp flashing to pipes that penetrate roof.

3.6 ERECTION TOLERANCES

A. Installation Tolerances: Shim and align sheet metal flashing and trim within installed tolerance of ¼-inch in 20 feet on slope and location lines indicated on Drawings and within 1/8-inch offset of adjoining faces and of alignment of matching profiles.

3.7 CLEANING AND PROTECTION

A. Clean exposed metal surfaces of substances that interfere with uniform oxidation and weathering.

B. Clean and neutralize flux materials. Clean off excess solder.

C. Clean off excess sealants.

D. Remove temporary protective coverings and strippable films as sheet metal flashing and trim are installed unless otherwise indicated in manufacturer's written installation instructions. On completion of sheet metal flashing and trim installation, remove unused materials and clean finished surfaces as recommended by sheet metal flashing and trim manufacturer. Maintain sheet metal flashing and trim in clean condition during construction.

E. Replace sheet metal flashing and trim that have been damaged or that have deteriorated beyond successful repair by finish touchup or similar minor repair procedures.

END OF SECTION 076200

SECTION 077200 - ROOF ACCESSORIES

PART 1 - GENERAL

1.1 RELATED DOCUMENTS

A. Drawings and general provisions of the Contract, including General and Supplementary Conditions and Division 01 Specification Sections, apply to this Section.

1.2 SUMMARY

A. Section Includes:

1. Preformed flashing sleeves.

B. Related Sections:

1. Section 055000 "Metal Fabrications" for metal vertical ladders, ships' ladders, and stairs for access to roof hatches.
2. Section 076200 "Sheet Metal Flashing and Trim" for shop- and field-formed metal flashing, roof-drainage systems, roof expansion-joint covers, and miscellaneous sheet metal trim and accessories.

1.3 COORDINATION

A. Coordinate layout and installation of roof accessories with roofing membrane and base flashing and interfacing and adjoining construction to provide a leakproof, weathertight, secure, and noncorrosive installation.

B. Coordinate dimensions with rough-in information or Shop Drawings of equipment to be supported.

1.4 ACTION SUBMITTALS

A. Product Data: For each type of roof accessory.

1. Include construction details, material descriptions, dimensions of individual components and profiles, and finishes.

B. Shop Drawings: For roof accessories.

1. Include plans, elevations, keyed details, and attachments to other work. Indicate dimensions, loadings, and special conditions. Distinguish between plant- and field-assembled work.

C. Samples: For each exposed product and for each color and texture specified, prepared on Samples of size to adequately show color.

1.5 INFORMATIONAL SUBMITTALS

A. Coordination Drawings: Roof plans, drawn to scale, and coordinating penetrations and roof-mounted items. Show the following:

1. Size and location of roof accessories specified in this Section.
2. Method of attaching roof accessories to roof or building structure.
3. Other roof-mounted items including mechanical and electrical equipment, ductwork, piping, and conduit.
4. Required clearances.

B. Sample Warranties: For manufacturer's special warranties.

1.6 CLOSEOUT SUBMITTALS

A. Operation and Maintenance Data: For roof accessories to include in operation and maintenance manuals.

PART 2 - PRODUCTS

2.1 PERFORMANCE REQUIREMENTS

A. General Performance: Roof accessories shall withstand exposure to weather and resist thermally induced movement without failure, rattling, leaking, or fastener disengagement due to defective manufacture, fabrication, installation, or other defects in construction.

2.2 PREFORMED FLASHING SLEEVES

A. Exhaust Vent Flashing: Double-walled metal flashing sleeve or boot, insulation filled, with integral deck flange, 12 inches high, with removable metal hood and slotted metal collar.

1. Manufacturers: Subject to compliance with requirements, available manufacturers offering products that may be incorporated into the Work include, but are not limited to, the following:

a. Custom Solution Roof and Metal Products
b. Thaler Metal USA Inc
c. Substitutions: Under provisions of Section 012500 "Substitution Procedures".

2. Metal: Aluminum sheet, 0.063-inch-thick.
3. Diameter: As required.
4. Finish: Manufacturer's standard.

B. Vent Stack Flashing: Metal flashing sleeve, uninsulated, with integral deck flange.

1. Manufacturers: Subject to compliance with requirements, available manufacturers offering products that may be incorporated into the Work include, but are not limited to, the following:

a. Custom Solution Roof and Metal Products
b. Milcor Inc.; Commercial Products Group of Hart & Cooley, Inc.

c. Thaler Metal USA Inc.
d. Substitutions: Under provisions of Section 012500 “Substitution Procedures”.

2. Metal: Aluminum sheet, 0.063-inch-thick.
3. Height: 19 inches.
4. Diameter: As required.
5. Finish: Manufacturer's standard.

2.3 METAL MATERIALS

A. Aluminum Sheet: ASTM B 209, manufacturer's standard alloy for finish required, with temper to suit forming operations and performance required.

1. Mill Finish: As manufactured.

2.4 MISCELLANEOUS MATERIALS

A. General: Provide materials and types of fasteners, protective coatings, sealants, and other miscellaneous items required by manufacturer for a complete installation.

B. Wood Nailers: Softwood lumber, pressure treated with waterborne preservatives for aboveground use, acceptable to authorities having jurisdiction, containing no arsenic or chromium, and complying with AWPA C2; not less than 1½ inches thick.

C. Bituminous Coating: Cold-applied asphalt emulsion complying with ASTM D 1187.

D. Underlayment:

1. Felt: ASTM D 226, Type II (No. 30), asphalt-saturated organic felt, non-perforated.
2. Polyethylene Sheet: 6-mil-thick polyethylene sheet complying with ASTM D 4397.
3. Slip Sheet: Building paper, 3-lb/100 sq. ft. minimum, rosin sized.

E. Fasteners: Roof accessory manufacturer's recommended fasteners suitable for application and metals being fastened. Match finish of exposed fasteners with finish of material being fastened. Provide non-removable fastener heads to exterior exposed fasteners. Furnish the following unless otherwise indicated:

1. Fasteners for Aluminum Sheet: Aluminum or Series 300 stainless-steel.

F. Gaskets: Manufacturer's standard tubular or fingered design of neoprene, EPDM, PVC, or silicone or a flat design of foam rubber, sponge neoprene, or cork.

G. Elastomeric Sealant: ASTM C 920, elastomeric polymer sealant as recommended by roof accessory manufacturer for installation indicated; low modulus; of type, grade, class, and use classifications required to seal joints and remain watertight.

H. Butyl Sealant: ASTM C 1311, single-component, solvent-release butyl rubber sealant; polyisobutylene plasticized; heavy bodied for expansion joints with limited movement.

I. Asphalt Roofing Cement: ASTM D 4586, asbestos free, of consistency required for application.

PART 3 - EXECUTION

3.1 EXAMINATION

A. Examine substrates, areas, and conditions, with Installer present, to verify actual locations, dimensions, and other conditions affecting performance of the Work.

B. Verify that substrate is sound, dry, smooth, clean, sloped for drainage, and securely anchored.

C. Verify dimensions of roof openings for roof accessories.

D. Proceed with installation only after unsatisfactory conditions have been corrected.

3.2 INSTALLATION

A. General: Install roof accessories according to manufacturer's written instructions.

1. Install roof accessories level, plumb, true to line and elevation, and without warping, jogs in alignment, excessive oil canning, buckling, or tool marks.
2. Anchor roof accessories securely in place so they are capable of resisting indicated loads.
3. Use fasteners, separators, sealants, and other miscellaneous items as required to complete installation of roof accessories and fit them to substrates.
4. Install roof accessories to resist exposure to weather without failing, rattling, leaking, or loosening of fasteners and seals.

B. Metal Protection: Protect metals against galvanic action by separating dissimilar metals from contact with each other or with corrosive substrates by painting contact surfaces with bituminous coating or by other permanent separation as recommended by manufacturer.

1. Coat concealed side of uncoated aluminum roof accessories with bituminous coating where in contact with wood, ferrous metal, or cementitious construction.
2. Underlayment: Where installing roof accessories directly on cementitious or wood substrates, install a course of felt underlayment and cover with a slip sheet, or install a course of polyethylene sheet.
3. Bed flanges in thick coat of asphalt roofing cement where required by manufacturers of roof accessories for waterproof performance.

C. Preformed Flashing-Sleeve Installation: Secure flashing sleeve to roof membrane according to flashing-sleeve manufacturer's written instructions.

D. Seal joints with elastomeric or butyl sealant as required by roof accessory manufacturer.

3.3 REPAIR AND CLEANING

A. Clean exposed surfaces according to manufacturer's written instructions.

B. Clean off excess sealants.

C. Replace roof accessories that have been damaged or that cannot be successfully repaired by finish touchup or similar minor repair procedures.

END OF SECTION 077200

SECTION 077253 - SNOW GUARDS

PART 1 - GENERAL

1.1 RELATED DOCUMENTS

A. Drawings and general provisions of the Contract, including General and Supplementary Conditions and Division 01 Specification Sections, apply to this Section.

1.2 SUMMARY

A. Section Includes:

1. Pad-type, flat-mounted metal snow guards.
2. Rail-type, seam-mounted snow guards.

B. Related Sections:

1. Section 012300 “Alternates” for work of this Section included in alternates.

1.3 ACTION SUBMITTALS

A. Product Data: For each type of product, include construction details, material descriptions, dimensions of individual components and profiles, and finishes.

B. Shop Drawings: Include roof plans showing layouts and attachment details of snow guards.

1. Include calculation of number and location of snow guards based on snow load, roof slope, roof type, components, spacings, and finish.

2. Include details of rail-type snow guards.

C. Samples:

1. Pad-Type Snow Guards: Full-size unit with installation hardware.

a. For units with factory-applied finishes, submit manufacturer's standard color selections.

1. Rail-Type Snow Guards: Bracket, 12-inch-long rail, and installation hardware.

a. For units with factory-applied finishes, submit manufacturer's standard color selections.

1.4 INFORMATIONAL SUBMITTALS

A. Product Test Reports: For each type of snow guard, for tests performed by a qualified testing agency, indicating load at failure of attachment to roof system identical to roof system used on this Project.

PART 2 - PRODUCTS

2.1 PERFORMANCE REQUIREMENTS

A. Performance Requirements: Provide snow guards that withstand exposure to weather and resist thermally induced movement without failure, rattling, or fastener disengagement due to defective manufacture, fabrication, installation, or other defects in construction.

1. Temperature Change: 120 deg F (67 deg C), ambient; 180 deg F (100 deg C), material surfaces.

B. Structural Performance: Snow guards shall withstand the effects of gravity loads and the following loads and stresses within limits and under conditions indicated.

1. Snow Loads: As indicated on Drawings.

2.2 PAD-TYPE SNOW GUARDS

A. Pad-Type, Flat-Mounted Metal Snow Guards:

1. Manufacturers: Subject to compliance with requirements, available manufacturers offering products that may be incorporated into the Work include, but are not limited to, the following:

a. Alpine SnowGuards; a division of Vermont Slate & Copper Services, Inc.
b. Berger Building Products
c. Zaleski Snow-Guards for Roofs, Inc.
d. Substitutions: Under provisions of Section 012500 “Substitution Procedures”.

2. Material:

a. ASTM B 209 aluminum sheet, not less than 0.032-inch-thick.

1) Finish: Mill.

3. Attachment: Manufacturer's tested system, capable of resisting design loads.

2.3 RAIL-TYPE SNOW GUARDS

A. Rail-Type, Seam-Mounted Snow Guards:

1. Manufacturers: Subject to compliance with requirements, available manufacturers offering products that may be incorporated into the Work include, but are not limited to, the following:

a. Alpine Snow Guards, a division of Vermont Slate & Copper Services, Inc.
b. S-5! Solutions
c. Sno-Gem, Inc.
d. Substitutions: Under provisions of Section 012500 “Substitution Procedures”.

2. Description: Snow guard rails fabricated from metal pipes, bars, or extrusions, anchored to brackets and equipped with two (2) rails .

3. Brackets and Baseplate: ASTM B 209 aluminum; mill finished.
4. Bars: ASTM B 221 aluminum; mill finish.

    a. Profile: Round.

5. Seam clamps: ASTM B 221 aluminum extrusion or ASTM B 85 aluminum casting with stainless steel set screws incorporating round nonpenetrating point; designed for use with applicable roofing system to which clamp is attached.

PART 3 - EXECUTION

3.1 EXAMINATION

A. Examine substrates and conditions, with Installer present, for compliance with requirements for installation tolerances, snow guard attachment, and other conditions affecting performance of the Work.

    1. Verify compatibility with and suitability of substrates, including compatibility with existing finishes or primers.

B. Proceed with installation only after unsatisfactory conditions have been corrected.

3.2 INSTALLATION

A. Install snow guards according to manufacturer's written instructions.

    1. Space rows as recommended by manufacturer.

B. Attachment for Asphalt Shingle Roofing:

    1. Pad-Type, Flat-Mounted Snow Guards: Mechanically anchored through each factory-prepared hole with fasteners concealed by the shingles.

C. Attachment for Standing-Seam Metal Roofing:

    1. Do not use fasteners that will penetrate metal roofing or fastening methods that void metal roofing finish warranty.
    2. Rail-Type, Seam-Mounted Snow Guards:

        a. Install brackets to vertical ribs in straight rows.
        b. Secure with stainless-steel set screws, incorporating round nonpenetrating point, on same side of standing seam.
        c. Torque set screw according to manufacturer's instructions.
        d. Install cross members to brackets.

END OF SECTION 077253

SECTION 078413 - PENETRATION FIRESTOPPING

PART 1 - GENERAL

1.1 RELATED DOCUMENTS

A. Drawings and general provisions of the Contract, including General and Supplementary Conditions and Division 01 Specification Sections, apply to this Section.

1.2 SUMMARY

A. Section Includes:

1. Fireproof firestopping and firesafing materials and accessories.

1.3 PERFORMANCE REQUIREMENTS

A. Fireproofing Materials: ASTM E 119 and ASTM E 814 to achieve a fire rating as noted on Drawings.

B. Surface Burning: ASTM E 84 with a flame spread/fuel contributed/smoke developed rating of 5/0/0.

1.4 SUBMITTALS

A. Product Data: For each type of product indicated provide characteristics, performance, and limitation criteria.

B. Manufacturer's Installation Instructions: Indicate preparation and installation instructions.

C. Manufacturer's Certificate: Certify that products meet or exceed specified requirements.

1.5 QUALIFICATIONS

A. Manufacturer: Company specializing in manufacturing the products specified in this Section with minimum three (3) years documented experience.

B. Applicator: Company specializing in performing the work of this Section with minimum five (5) years documented experience.

1.6 REGULATORY REQUIREMENTS

A. Conform to applicable State Building code for fire resistance ratings and surface burning characteristics.

B. UL Classifications for these systems shall be (all two (2) hours or more):

1. Duct Penetrations: C-AJ-7027
2. Pipe Penetrations: C-AJ-1079
3. Cable Penetrations: C-AJ-1079

4. Conduit Penetrations: C-AJ-1079

1.7 ENVIRONMENTAL REQUIREMENTS

A. Do not apply materials when temperature of substrate material and ambient air is below 60 degrees F.

B. Maintain this minimum temperature before, during and for three (3) days after installation of materials.

C. Provide ventilation in areas to receive solvent cured materials.

1.8 SEQUENCING

A. Sequence Work to permit firestopping materials to be installed after adjacent and surrounding work is complete.

PART 2 - PRODUCTS

2.1 MANUFACTURERS

A. Thermal Ceramics; **Firemaster Putty, Bulk** and **Blankets**

B. Tremco Incorporated; **Fyre-shield** and **Cerablanket FS Hilti, Inc.**

C. United States Gypsum; **Thermafiber Safing Insulation** and **FIRECODE compound**

D. Substitutions: Under provisions of Section 012500 “Substitution Procedures”.

2.2 MATERIALS

A. Firestopping Material: Single component silicone elastomeric compounds; conforming to the following:

1. Elongation & Shrinkage: Five percent (5%).
2. Tensile Strength: 300 psi.
3. Density: 8 lb/cu ft.
4. Surface Durability: 35 (Shore Hardness).
5. Durability and Longevity: Permanent.
6. Side Effects during Installation: Non-toxic.
7. Long Term Side Effects: None.

B. Primer: Type recommended by firestopping manufacturer for specific substrate surfaces.

C. Firesafing Blankets: ASTM C 665; 4 psf nominal density firesafing insulation.

D. Putty Pads: UL CLIV; acoustic, intumescent pad; 3.2mm thickness.

2.3 ACCESSORIES

A. Dam Material: Mineral fiber matting, permanent.

B. Retainers: Stainless clips to support mineral fiber matting

2.4 FINISHES

A. Color: Dark gray or manufacturer’s standard color.

PART 3 - EXECUTION

3.1 EXAMINATION

A. Examine substrates and conditions, with Installer present, for compliance with requirements for opening configurations, penetrating items, substrates, and other conditions affecting performance of the Work.

B. Proceed with installation only after unsatisfactory conditions have been corrected.

3.2 PREPARATION

A. Surface Cleaning: Clean out openings immediately before installing penetration firestopping to comply with manufacturer's written instructions and with the following requirements:

1. Remove from surfaces of opening substrates and from penetrating items foreign materials that could interfere with adhesion of penetration firestopping.
2. Clean opening substrates and penetrating items to produce clean, sound surfaces capable of developing optimum bond with penetration firestopping. Remove loose particles remaining from cleaning operation.
3. Remove laitance and form-release agents from concrete.

B. Install backing materials to arrest liquid material leakage.

3.3 INSTALLATION

A. General: Install penetration firestopping to comply with manufacturer's written installation instructions and published drawings for products and applications indicated.

B. Apply firestopping material to all wall and floor penetrations through rated assemblies. These penetrations include electrical conduit and raceways, plumbing and heating system penetrations, ducts, and other system chases.

C. Apply primer and materials in accordance with manufacturer's instructions.

D. Apply firestopping material in sufficient thickness to achieve rating to a density of fifty percent (50%) to uniform density and texture.

E. Install material at walls or partition openings which contain penetrating sleeves, piping, ductwork, conduit, and other items requiring firestopping.

F. Remove dam material after firestopping material has cured.

3.4 CLEANING AND PROTECTION

A. Clean off excess materials adjacent to openings as the Work progresses by methods and with cleaning materials that are approved in writing by penetration firestopping manufacturers and that do not damage materials in which openings occur.

B. Provide final protection and maintain conditions during and after installation that ensure that penetration firestopping is without damage or deterioration at time of Substantial Completion. If, despite such protection, damage or deterioration occurs, immediately cut out and remove damaged or deteriorated penetration firestopping and install new materials to produce systems complying with specified requirements.

3.5 SCHEDULE

A. See Construction Documents for rating information and construction details and conditions.

B. Firesafe all penetrations through new and existing masonry and gypsum board construction in the project work areas, equal to the 1- or 2-hour rating of the appropriate spaces.

END OF SECTION 078413

SECTION 079200 - JOINT SEALANTS

PART 1 - GENERAL

1.1 RELATED DOCUMENTS

A. Drawings and general provisions of the Contract, including General and Supplementary Conditions and Division 01 Specification Sections, apply to this Section.

1.2 SUMMARY

A. Section Includes:

1. Silicone joint sealants.
2. Latex joint sealants.

1.3 ACTION SUBMITTALS

A. Product Data: For each joint-sealant product indicated.

B. Samples: Manufacturer's color charts consisting of strips of cured sealants showing the full range of colors available for each product exposed to view.

C. Joint-Sealant Schedule: Include the following information:

1. Joint-sealant application, joint location, and designation.
2. Joint-sealant manufacturer and product name.
3. Joint-sealant formulation.
4. Joint-sealant color.

1.4 INFORMATIONAL SUBMITTALS

A. Qualification Data: For qualified Installer.

B. Product Certificates: For each kind of joint sealant and accessory, from manufacturer.

C. Product Test Reports: Based on evaluation of comprehensive tests performed by a qualified testing agency, indicating that sealants comply with requirements.

D. Warranties: Sample of special warranties.

1.5 QUALITY ASSURANCE

A. Installer Qualifications: Manufacturer's authorized representative who is trained and approved for installation of units required for this Project.

B. Source Limitations: Obtain each kind of joint sealant from single source from single manufacturer.

C. Product Testing: Test joint sealants using a qualified testing agency.

1. Testing Agency Qualifications: An independent testing agency qualified according to ASTM C 1021 to conduct the testing indicated.

1.6 PROJECT CONDITIONS

A. Do not proceed with installation of joint sealants under the following conditions:

1. When ambient and substrate temperature conditions are outside limits permitted by joint-sealant manufacturer or are below 40 deg F (5 deg C).
2. When joint substrates are wet.
3. Where joint widths are less than those allowed by joint-sealant manufacturer for applications indicated.
4. Where contaminants capable of interfering with adhesion have not yet been removed from joint substrates.

1.7 WARRANTY

A. Special Installer's Warranty: Manufacturer's standard form in which Installer agrees to repair or replace joint sealants that do not comply with performance and other requirements specified in this Section within specified warranty period.

1. Warranty Period: Two (2) years from date of Substantial Completion.

B. Special warranties specified in this article exclude deterioration or failure of joint sealants from the following:

1. Movement of the structure caused by structural settlement or errors attributable to design or construction resulting in stresses on the sealant exceeding sealant manufacturer's written specifications for sealant elongation and compression.
2. Disintegration of joint substrates from natural causes exceeding design specifications.
3. Mechanical damage caused by individuals, tools, or other outside agents.
4. Changes in sealant appearance caused by accumulation of dirt or other atmospheric contaminants.

PART 2 - PRODUCTS

2.1 MATERIALS, GENERAL

A. Compatibility: Provide joint sealants, backings, and other related materials that are compatible with one another and with joint substrates under conditions of service and application, as demonstrated by joint-sealant manufacturer, based on testing and field experience.

B. VOC Content of Interior Sealants: Sealants and sealant primers used inside the weatherproofing system shall comply with the following:

1. Architectural sealants shall have a VOC content of 250 g/L or less.

C. Liquid-Applied Joint Sealants: Comply with ASTM C 920 and other requirements indicated for each liquid-applied joint sealant specified, including those referencing ASTM C 920 classifications for type, grade, class, and uses related to exposure and joint substrates.

D. Stain-Test-Response Characteristics: Where sealants are specified to be non-staining to porous substrates, provide products that have undergone testing according to ASTM C 1248 and have not stained porous joint substrates indicated for Project.

E. Colors of Exposed Joint Sealants: As selected by Architect and Owner from manufacturer's entire range, to match adjacent where required.

2.2 SILICONE JOINT SEALANTS

A. Silicone, Non-Staining: Non-Staining, single-component, non-sag, plus fifty percent (+50%) and minus fifty percent (-50%) movement capability, non-traffic-use, neutral-curing silicone joint sealant; ASTM C 920, Type S, Grade NS, Class 50, Use NT.

1. Products:

a. Dow Corning Corporation
b. Master Bond, Inc.
c. Pecora Corporation
d. Tremco Incorporated
e. Substitutions: Under provisions of Section 012500 “Substitution Procedures”.

B. Mildew-Resistant, Single-Component, Non-sag, Neutral-Curing Silicone Joint Sealant: ASTM C 920, Type S, Grade NS, Class 25, for Use NT.

1. Products: Subject to compliance with requirements, available products that may be incorporated into the Work include, but are not limited to, the following:

a. Pecora Corporation; **898**
b. Substitutions: Under provisions of Section 012500 “Substitution Procedures”.

2.3 LATEX JOINT SEALANTS

A. Latex Joint Sealant: Acrylic latex or siliconized acrylic latex, ASTM C 834, Type OP, Grade NF.

1. Products: Subject to compliance with requirements, available products that may be incorporated into the Work include, but are not limited to, the following:

a. BASF Building Systems; **Sonolac**
b. Bostik, Inc.; **Chem-Calk 600**
c. Pecora Corporation; **AC-20+**
d. Tremco Incorporated; **Tremflex 834**
e. Substitutions: Under provisions of Section 012500 “Substitution Procedures”.

2.4 JOINT SEALANT BACKING

A. General: Provide sealant backings of material that are non-staining; are compatible with joint substrates, sealants, primers, and other joint fillers; and are approved for applications indicated by sealant manufacturer based on field experience and laboratory testing.

B. Cylindrical Sealant Backings: ASTM C 1330, Type B (bi-cellular material with a surface skin), and of size and density to control sealant depth and otherwise contribute to producing optimum sealant performance.

C. Bond-Breaker Tape: Polyethylene tape or other plastic tape recommended by sealant manufacturer for preventing sealant from adhering to rigid, inflexible joint-filler materials or joint surfaces at back of joint. Provide self-adhesive tape where applicable.

2.5 MISCELLANEOUS MATERIALS

A. Primer: Material recommended by joint-sealant manufacturer where required for adhesion of sealant to joint substrates indicated, as determined from preconstruction joint-sealant-substrate tests and field tests.

B. Cleaners for Nonporous Surfaces: Chemical cleaners acceptable to manufacturers of sealants and sealant backing materials, free of oily residues or other substances capable of staining or harming joint substrates and adjacent nonporous surfaces in any way, and formulated to promote optimum adhesion of sealants to joint substrates.

C. Masking Tape: Non-staining, nonabsorbent material compatible with joint sealants and surfaces adjacent to joints.

PART 3 - EXECUTION

3.1 EXAMINATION

A. Examine joints indicated to receive joint sealants, with Installer present, for compliance with requirements for joint configuration, installation tolerances, and other conditions affecting joint-sealant performance.

B. Proceed with installation only after unsatisfactory conditions have been corrected.

3.2 PREPARATION

A. Surface Cleaning of Joints: Clean out joints immediately before installing joint sealants to comply with joint-sealant manufacturer's written instructions and the following requirements:

1. Remove all foreign material from joint substrates that could interfere with adhesion of joint sealant, including dust, paints (except for permanent, protective coatings tested and approved for sealant adhesion and compatibility by sealant manufacturer), old joint sealants, oil, grease, waterproofing, water repellents, water, surface dirt, and frost.
2. Clean porous joint substrate surfaces by brushing, grinding, mechanical abrading, or a combination of these methods to produce a clean, sound substrate capable of developing optimum bond with joint sealants. Remove loose particles remaining after cleaning operations above by vacuuming or blowing out joints with oil-free compressed air. Porous joint substrates include the following:

   a. Concrete.
   b. Masonry.

3. Remove laitance and form-release agents from concrete.
4. Clean nonporous joint substrate surfaces with chemical cleaners or other means that do not stain, harm substrates, or leave residues capable of interfering with adhesion of joint sealants. Nonporous joint substrates include the following:

    a. Metal.
    b. Glass.
    c. Porcelain enamel.
    d. Glazed surfaces of ceramic tile.

B. Joint Priming: Prime joint substrates where recommended by joint-sealant manufacturer or prior experience. Apply primer to comply with joint-sealant manufacturer's written instructions. Confine primers to areas of joint-sealant bond; do not allow spillage or migration onto adjoining surfaces.

C. Masking Tape: Use masking tape where required to prevent contact of sealant or primer with adjoining surfaces that otherwise would be permanently stained or damaged by such contact or by cleaning methods required to remove sealant smears. Remove tape immediately after tooling without disturbing joint seal.

3.3 INSTALLATION OF JOINT SEALANTS

A. General: Comply with joint-sealant manufacturer's written installation instructions for products and applications indicated, unless more stringent requirements apply.

B. Sealant Installation Standard: Comply with recommendations in ASTM C 1193 for use of joint sealants as applicable to materials, applications, and conditions indicated.

C. Install sealant backings of kind indicated to support sealants during application and at position required to produce cross-sectional shapes and depths of installed sealants relative to joint widths that allow optimum sealant movement capability.

    1. Do not leave gaps between ends of sealant backings.
    2. Do not stretch, twist, puncture, or tear sealant backings.
    3. Remove absorbent sealant backings that have become wet before sealant application and replace them with dry materials.

D. Install bond-breaker tape behind sealants where sealant backings are not used between sealants and backs of joints.

E. Install sealants using proven techniques that comply with the following and at the same time backings are installed:

    1. Place sealants so they directly contact and fully wet joint substrates.
    2. Completely fill recesses in each joint configuration.
    3. Produce uniform, cross-sectional shapes and depths relative to joint widths that allow optimum sealant movement capability.

F. Tooling of Non-Sag Sealants: Immediately after sealant application and before skinning or curing begins, tool sealants according to requirements specified in subparagraphs below to form

smooth, uniform beads of configuration indicated; to eliminate air pockets; and to ensure contact and adhesion of sealant with sides of joint.

1. Remove excess sealant from surfaces adjacent to joints.
2. Use tooling agents that are approved in writing by sealant manufacturer and that do not discolor sealants or adjacent surfaces.
3. Provide concave joint profile per Figure 8A in ASTM C 1193, unless otherwise indicated.
4. Provide flush joint profile where indicated per Figure 8B in ASTM C 1193.
5. Provide recessed joint configuration of recess depth and at locations indicated per Figure 8C in ASTM C 1193.

    a. Use masking tape to protect surfaces adjacent to recessed tooled joints.

3.4 CLEANING

A. Clean off excess sealant or sealant smears adjacent to joints as the Work progresses by methods and with cleaning materials approved in writing by manufacturers of joint sealants and of products in which joints occur.

3.5 PROTECTION

A. Protect joint sealants during and after curing period from contact with contaminating substances and from damage resulting from construction operations or other causes so sealants are without deterioration or damage at time of Substantial Completion. If, despite such protection, damage or deterioration occurs, cut out and remove damaged or deteriorated joint sealants immediately so installations with repaired areas are indistinguishable from original work.

3.6 JOINT-SEALANT SCHEDULE

A. Joint-Sealant Application: Exterior joints in vertical surfaces and horizontal non-traffic surfaces.

1. Joint Locations:

    a. Control and expansion joints in unit masonry.
    b. Joints between different materials.
    c. Perimeter joints between materials listed above and frames of doors, windows, and louvers.
    d. Other joints as indicated.

2. Joint Sealant: Silicone, non-staining, S, NS, 50, NT.

B. Joint-Sealant Application: Interior joints in vertical surfaces and horizontal non-traffic surfaces.

1. Joint Locations:

    a. Perimeter joints of exterior openings where indicated.
    b. Perimeter joints between interior wall surfaces and frames of interior doors, windows, and elevator entrances.
    c. Other joints as indicated.

2. Joint Sealant: Latex.

C. Joint-Sealant Application: Mildew-resistant interior joints in vertical surfaces and horizontal non-traffic surfaces.

1. Joint Sealant Location:

a. Joints between plumbing fixtures and adjoining walls, floors, and counters.
b. Other joints as indicated.

2. Joint Sealant: Mildew resistant, single component, non-sag, neutral curing, silicone.

END OF SECTION 079200

SECTION 081113 - HOLLOW METAL DOORS AND FRAMES

PART 1 - GENERAL

1.1 RELATED DOCUMENTS

A. Drawings and general provisions of the Contract, including General and Supplementary Conditions and Division 01 Specification Sections, apply to this Section.

1.2 SUMMARY

A. Section includes hollow-metal work.

B. Related Requirements:

1. Section 087100 “Door Hardware" for door hardware for hollow-metal doors and frames.

1.3 DEFINITIONS

A. Minimum Thickness: Minimum thickness of base metal without coatings according to NAAMM-HMMA 803 or SDI A250.8.

1.4 ACTION SUBMITTALS

A. Product Data: For each type of product.

1. Include construction details, material descriptions, core descriptions, and finishes.

B. Shop Drawings: Include the following:

1. Elevations of each door type.
2. Details of doors, including vertical- and horizontal-edge details and metal thicknesses.
3. Frame details for each frame type, including dimensioned profiles and metal thicknesses.
4. Locations of reinforcement and preparations for hardware.
5. Details of each different wall opening condition.
6. Details of anchorages, joints, field splices, and connections.
7. Details of accessories.

C. Samples: For units with factory-applied color finishes.

D. Product Schedule: For hollow-metal work prepared by or under the supervision of supplier, using same reference numbers for details and openings as those on Drawings. Coordinate with final Door Hardware Schedule.

1.5 DELIVERY, STORAGE, AND HANDLING

A. Deliver hollow-metal work palletized, packaged, or crated to provide protection during transit and Project-site storage. Do not use non-vented plastic.

B. Deliver welded frames with two (2) removable spreader bars across bottom of frames, tack welded to jambs and mullions.

C. Store hollow-metal work vertically under cover at Project site with head up. Place on minimum 4-inch-high wood blocking. Provide minimum ¼-inch space between each stacked door to permit air circulation.

PART 2 - PRODUCTS

2.1 MANUFACTURERS

A. Basis of Design:

1. Steelcraft; an Allegion company

B. Manufacturers: Subject to compliance with requirements, available manufacturers offering products that may be incorporated into the Work include, but are not limited to, the following:

1. Ceco Door Products; an ASSA ABLOY Group company
2. Curries Company; an ASSA ABLOY Group company
3. Substitutions: Under provisions of Section 012500 “Substitution Procedures”.

C. Source Limitations: Obtain hollow-metal work from single source from single manufacturer.

2.2 INTERIOR DOORS AND FRAMES

A. Construct interior doors and frames to comply with the standards indicated for materials, fabrication, hardware locations, hardware reinforcement, tolerances, and clearances, and as specified.

B. Extra-Heavy-Duty Doors and Frames: SDI A250.8, Level 3.

1. Physical Performance: Level A according to SDI A250.4.
2. Doors:

   a. Type: As indicated in the Door and Frame Schedule.
   b. Thickness: 1¾ inches.
   c. Face: Uncoated, cold-rolled steel sheet, minimum thickness of 16-gauge.
   d. Edge Construction: Model 2, Seamless.
   e. Core: Manufacturer's standard Kraft-paper honeycomb, polystyrene, polyurethane, polyisocyanurate, mineral-board, or vertical steel-stiffener core.

3. Frames:

   a. Materials: Uncoated, steel sheet, minimum thickness of 16-gauge.
   b. Construction: Full profile welded.

4. Exposed Finish: Prime.

2.3 EXTERIOR HOLLOW-METAL DOORS AND FRAMES

A. Construct exterior doors and frames to comply with the standards indicated for materials, fabrication, hardware locations, hardware reinforcement, tolerances, and clearances, and as specified.

B. Maximum-Duty Doors and Frames: SDI A250.8, Level 4.

1. Physical Performance: Level A according to SDI A250.4.
2. Doors:

   a. Type: As indicated in the Door and Frame Schedule.
   b. Thickness: 1¾ inches.
   c. Face: Metallic-coated steel sheet, minimum thickness of 14-gauge, with minimum A40 coating.
   d. Edge Construction: Model 2, Seamless.
   e. Core: Vertical steel stiffened.

3. Frames:

   a. Materials: Metallic-coated steel sheet, minimum thickness of 14-gauge, with minimum A40 coating.
   b. Construction: Face welded.

4. Exposed Finish: Prime.

2.4 FRAME ANCHORS

A. Jamb Anchors:

1. Type: Anchors of minimum size and type required by applicable door and frame standard, and suitable for performance level indicated.
2. Quantity: Minimum of three (3) anchors per jamb, with one (1) additional anchor for frames with no floor anchor. Provide one (1) additional anchor for each 24 inches of frame height above 7 feet.
3. Post-installed Expansion Anchor: Minimum 3/8-inch-diameter bolts with expansion shields or inserts, with manufacturer's standard pipe spacer.

B. Floor Anchors: Provide floor anchors for each jamb and mullion that extends to floor.

C. Material: ASTM A 879, Commercial Steel (CS), 04Z coating designation; mill phosphatized.

1. For anchors built into exterior walls, steel sheet complying with ASTM A 1008 or ASTM A 1011; hot-dip galvanized according to ASTM A 153, Class B.

2.5 MATERIALS

A. Cold-Rolled Steel Sheet: ASTM A 1008, Commercial Steel (CS), Type B; suitable for exposed applications.

B. Metallic-Coated Steel Sheet: ASTM A 653, Commercial Steel (CS), Type B.

C. Inserts, Bolts, and Fasteners: Hot-dip galvanized according to ASTM A 153.

D. Power-Actuated Fasteners in Concrete: Fastener system of type suitable for application indicated, fabricated from corrosion-resistant materials, with clips or other accessory devices for attaching hollow-metal frames of type indicated.

E. Mineral-Fiber Insulation: ASTM C 665, Type I (blankets without membrane facing); consisting of fibers manufactured from slag or rock wool; with maximum flame-spread and smoke-developed indexes of 25 and 50, respectively; passing ASTM E 136 for combustion characteristics.

2.6 FABRICATION

A. Fabricate hollow-metal work to be rigid and free of defects, warp, or buckle. Accurately form metal to required sizes and profiles, with minimum radius for metal thickness. Where practical, fit and assemble units in manufacturer's plant. To ensure proper assembly at Project site, clearly identify work that cannot be permanently factory assembled before shipment.

B. Hollow-Metal Doors:

1. Steel-Stiffened Door Cores: Provide minimum thickness 20-gauge, steel vertical stiffeners of same material as face sheets extending full-door height, with vertical webs spaced not more than 6 inches apart. Spot weld to face sheets no more than 5 inches o.c. Fill spaces between stiffeners with glass- or mineral-fiber insulation.
2. Vertical Edges for Single-Acting Doors: Bevel edges 1/8-inch in 2 inches.
3. Top Edge Closures: Close top edges of doors with flush closures of same material as face sheets.
4. Bottom Edge Closures: Close bottom edges of doors with end closures or channels of same material as face sheets.
5. Exterior Doors: Provide weep-hole openings in bottoms of exterior doors to permit moisture to escape. Seal joints in top edges of doors against water penetration.

C. Hollow-Metal Frames: Where frames are fabricated in sections due to shipping or handling limitations, provide alignment plates or angles at each joint, fabricated of same thickness metal as frames.

1. Provide countersunk, flat- or oval-head exposed screws and bolts for exposed fasteners unless otherwise indicated.
2. Floor Anchors: Weld anchors to bottoms of jambs with at least four (4) spot welds per anchor; however, for slip-on drywall frames, provide anchor clips or countersunk holes at bottoms of jambs.
3. Jamb Anchors: Provide spacing of anchors as follows:

   a. Stud-Wall Type: Locate anchors not more than 18 inches from top and bottom of frame. Space anchors not more than 32 inches o.c.
   b. Post-installed Expansion Type: Locate anchors not more than 6 inches from top and bottom of frame. Space anchors not more than 26 inches o.c.

4. Door Silencers: Except on weather-stripped frames, drill stops to receive door silencers as follows. Keep holes clear during construction.

a. Single-Door Frames: Drill stop in strike jamb to receive three (3) door silencers.
b. Double-Door Frames: Drill stop in head jamb to receive two (2) door silencers.

D. Fabricate concealed stiffeners and edge channels from either cold- or hot-rolled steel sheet.

E. Hardware Preparation: Factory prepare hollow-metal work to receive templated mortised hardware; include cutouts, reinforcement, mortising, drilling, and tapping according to SDI A250.6, the Door Hardware Schedule, and templates.

1. Reinforce frames to receive non-templated, mortised, and surface-mounted door hardware.
2. Comply with applicable requirements in SDI A250.6 and BHMA A156.115 for preparation of hollow-metal work for hardware.

2.7 STEEL FINISHES

A. Prime Finish: Clean, pretreat, and apply manufacturer's standard primer.

1. Shop Primer: Manufacturer's standard, fast-curing, lead- and chromate-free primer complying with SDI A250.10; recommended by primer manufacturer for substrate; compatible with substrate and field-applied coatings despite prolonged exposure.

PART 3 - EXECUTION

3.1 EXAMINATION

A. Examine substrates, areas, and conditions, with Installer present, for compliance with requirements for installation tolerances and other conditions affecting performance of the Work.

B. Proceed with installation only after unsatisfactory conditions have been corrected.

3.2 PREPARATION

A. Remove welded-in shipping spreaders installed at factory. Restore exposed finish by grinding, filling, and dressing, as required to make repaired area smooth, flush, and invisible on exposed faces.

B. Drill and tap doors and frames to receive non-templated, mortised, and surface-mounted door hardware.

3.3 INSTALLATION

A. General: Install hollow-metal work plumb, rigid, properly aligned, and securely fastened in place. Comply with Drawings and manufacturer's written instructions.

B. Hollow-Metal Frames: Install hollow-metal frames for doors, transoms, sidelites, borrowed lites, and other openings, of size and profile indicated. Comply with SDI A250.11 or NAAMM-HMMA 840 as required by standards specified.

1. Set frames accurately in position; plumbed, aligned, and braced securely until permanent anchors are set. After wall construction is complete, remove temporary braces, leaving surfaces smooth and undamaged.

    a. Where frames are fabricated in sections because of shipping or handling limitations, field splice at approved locations by welding face joint continuously; grind, fill, dress, and make splice smooth, flush, and invisible on exposed faces.
    b. Install frames with removable stops located on secure side of opening.
    c. Remove temporary braces necessary for installation only after frames have been properly set and secured.
    d. Check plumb, square, and twist of frames as walls are constructed. Shim as necessary to comply with installation tolerances.

2. Floor Anchors: Provide floor anchors for each jamb and mullion that extends to floor, and secure with post-installed expansion anchors.

    a. Floor anchors may be set with power-actuated fasteners instead of post-installed expansion anchors if so indicated and approved on Shop Drawings.

3. Metal-Stud Partitions: Solidly pack mineral-fiber insulation inside frames.
4. In-Place Concrete Construction: Secure frames in place with post-installed expansion anchors. Countersink anchors, and fill and make smooth, flush, and invisible on exposed faces.
5. Installation Tolerances: Adjust hollow-metal door frames for squareness, alignment, twist, and plumb to the following tolerances:

    a. Squareness: Plus or minus 1/16-inch, measured at door rabbet on a line 90 degrees from jamb perpendicular to frame head.
    b. Alignment: Plus or minus 1/16-inch, measured at jambs on a horizontal line parallel to plane of wall.
    c. Twist: Plus or minus 1/16-inch, measured at opposite face corners of jambs on parallel lines, and perpendicular to plane of wall.
    d. Plumbness: Plus or minus 1/16-inch, measured at jambs at floor.

C. Hollow-Metal Doors: Fit hollow-metal doors accurately in frames, within clearances specified below. Shim as necessary.

1. Non-Fire-Rated Steel Doors:

    a. Between Door and Frame Jambs and Head: 1/8-inch plus or minus 1/32-inch.
    b. Between Edges of Pairs of Doors: 1/8- to ¼-inch plus or minus 1/32-inch.
    c. At Bottom of Door: ¾-inch.
    d. Between Door Face and Stop: 1/16- to 1/8-inch plus or minus 1/32-inch.

3.4 ADJUSTING AND CLEANING

A. Final Adjustments: Check and readjust operating hardware items immediately before final inspection. Leave work in complete and proper operating condition. Remove and replace defective work, including hollow-metal work that is warped, bowed, or otherwise unacceptable.

B. Prime-Coat Touchup: Immediately after erection, sand smooth rusted or damaged areas of prime coat and apply touchup of compatible air-drying, rust-inhibitive primer.

C. Metallic-Coated Surface Touchup: Clean abraded areas and repair with galvanizing repair paint according to manufacturer's written instructions.

END OF SECTION 081113

SECTION 081416 - FLUSH WOOD DOORS

PART 1 - GENERAL

1.1 RELATED DOCUMENTS

A. Drawings and general provisions of the Contract, including General and Supplementary Conditions and Division 01 Specification Sections, apply to this Section.

1.2 SUMMARY

A. Section Includes:

1. Solid-core doors with wood-veneer faces.
2. Factory priming flush wood doors.
3. Factory fitting flush wood doors to frames and factory machining for hardware.

B. Related Requirements:

1. Section 088000 "Glazing" for glass view panels in flush wood doors.
2. Section 099123 "Interior Painting" for field finishing doors.

1.3 ACTION SUBMITTALS

A. Product Data: For each type of door. Include details of core and edge construction and trim for openings.

B. Shop Drawings: Indicate location, size, and hand of each door; elevation of each kind of door; construction details not covered in Product Data; and the following:

1. Door schedule indicating door location, type, size, and swing.
2. Door elevations, dimensions, locations of hardware, lite and louver cutouts, and glazing thicknesses.
3. Dimensions and locations of blocking for hardware attachment.
4. Dimensions and locations of mortises and holes for hardware.
5. Clearances and undercuts.
6. Requirements for veneer matching.
7. Doors to be factory finished and application requirements.

C. Samples:

1. Corner sections of doors, approximately 8 by 10 inches, with door faces and edges representing actual materials to be used.

   a. Provide Samples for each species of veneer and solid lumber required.

2. Frames for light openings, 6 inches long, for each material, type, and finish required.

1.4 INFORMATIONAL SUBMITTALS

A. Sample Warranty: For special warranty.

1.5 CLOSEOUT SUBMITTALS

A. Special warranties.

1.6 DELIVERY, STORAGE, AND HANDLING

A. Comply with requirements of referenced standard and manufacturer's written instructions.

B. Package doors individually in plastic bags or cardboard cartons.

C. Mark each door on top and bottom rail with opening number used on Shop Drawings.

1.7 FIELD CONDITIONS

A. Environmental Limitations: Do not deliver or install doors until spaces are enclosed and weathertight, wet work in spaces is complete and dry, and HVAC system is operating and maintaining temperature and relative humidity at levels designed for building occupants for the remainder of construction period.

1.8 WARRANTY

A. Special Warranty: Manufacturer agrees to repair or replace doors that fail in materials or workmanship within specified warranty period.

1. Failures include, but are not limited to, the following:

a. Delamination of veneer.
b. Warping (bow, cup, or twist) more than ¼-inch in a 42-by-84-inch section.
c. Telegraphing of core construction in face veneers exceeding 0.01-inch in a 3-inch span.

2. Warranty shall also include installation and finishing that may be required due to repair or replacement of defective doors.
3. Warranty Period for Solid-Core Interior Doors: Life of installation.

PART 2 - PRODUCTS

2.1 MANUFACTURERS

A. Manufacturers: Subject to compliance with requirements, available manufacturers offering products that may be incorporated into the Work include, but are not limited to, the following:

1. Manhattan Door Corp.
2. Masonite Architectural Company
3. VT Industries, Inc.
4. Substitutions: Under provisions of Section 012500 “Substitution Procedures”.

B. Source Limitations: Obtain flush wood doors from single manufacturer.

2.2 PERFORMANCE REQUIREMENTS

A. Smoke- and Draft-Control Door Assemblies: Listed and labeled for smoke and draft control by a qualified testing agency acceptable to authorities having jurisdiction, based on testing in accordance with UL 1784 and installed in compliance with NFPA 105.

2.3 FLUSH WOOD DOORS, GENERAL

A. Quality Standard: In addition to requirements specified, comply with AWI's "Architectural Woodwork Standards."

B. Low-Emitting Materials: Fabricate doors with adhesives and composite wood products that do not contain urea formaldehyde.

2.4 DOORS FOR OPAQUE FINISH

A. Interior Solid-Core Doors:

1. AWI Grade: **Custom**.
2. Faces: Any closed-grain hardwood of mill option.
3. Exposed Vertical and Top Edges: Any closed-grain hardwood.
4. Core for Non-Fire-Rated Doors:

a. ANSI A208.1, Grade LD-2 particleboard.

1) Blocking: Provide wood blocking in particleboard-core doors as follows:

a) 5-inch top-rail blocking, in doors indicated to have closers.
b) 5-inch bottom-rail blocking, in exterior doors and doors indicated to have kick, mop, or armor plates.

2) Provide doors with glued-wood-stave cores instead of particleboard cores for doors scheduled to receive exit devices in Section 087100 "Door Hardware."

5. Construction: Five (5) plies. Stiles and rails are bonded to core, then entire unit is abrasive planed before veneering.

2.5 LIGHT FRAMES AND LOUVERS

A. Wood Beads for Light Openings in Wood Doors: Provide manufacturer's standard wood beads unless otherwise indicated.

1. Wood Species: Same species as door faces.
2. Profile: Manufacturer's standard shape.

2.6 FABRICATION

A. Factory fit doors to suit frame-opening sizes indicated.

1. Comply with clearance requirements of referenced quality standard for fitting unless otherwise indicated.

B. Factory machine doors for hardware that is not surface applied.

1. Locate hardware to comply with DHI-WDHS-3.
2. Comply with final hardware schedules, door frame Shop Drawings, ANSI/BHMA-156.115-W, and hardware templates.
3. Coordinate with hardware mortises in metal frames to verify dimensions and alignment before factory machining.

C. Openings: Factory cut and trim openings through doors.

1. Light Openings: Trim openings with moldings of material and profile indicated.
2. Glazing: Factory install glazing in doors indicated to be factory finished. Comply with applicable requirements in Section 088000 "Glazing."

2.7 FACTORY PRIMING

A. Doors for Opaque Finish: Factory prime faces, all four (4) edges, edges of cutouts, and mortises with one (1) coat of wood primer specified in Section 099123" Interior Painting."

PART 3 - EXECUTION

3.1 EXAMINATION

A. Examine doors and installed door frames, with Installer present, before hanging doors.

1. Verify that installed frames comply with indicated requirements for type, size, location, and swing characteristics and have been installed with level heads and plumb jambs.
2. Reject doors with defects.

B. Proceed with installation only after unsatisfactory conditions have been corrected.

3.2 INSTALLATION

A. Hardware: For installation, see Section 087100 "Door Hardware."

B. Install doors to comply with manufacturer's written instructions and referenced quality standard, and as indicated.

1. Install smoke- and draft-control doors according to NFPA 105.

C. Factory-Fitted Doors: Align in frames for uniform clearance at each edge.

3.3 ADJUSTING

A. Operation: Rehang or replace doors that do not swing or operate freely.

B. Finished Doors: Replace doors that are damaged or that do not comply with requirements. Doors may be repaired or refinished if Work complies with requirements and shows no evidence of repair or refinishing.

END OF SECTION 081416

SECTION 083113 - ACCESS DOORS AND FRAMES

PART 1 - GENERAL

1.1 RELATED DOCUMENTS

A. Drawings and general provisions of the Contract, including General and Supplementary Conditions and Division 01 Specification Sections, apply to this Section.

1.2 SUMMARY

A. Section Includes:

1. Access doors and frames.

1.3 ACTION SUBMITTALS

A. Product Data: For each type of product.

1. Include construction details, material descriptions, dimensions of individual components and profiles, and finishes.

B. Samples: For each type of access door and frame and for each finish specified, complete assembly minimum 6 by 6 inches in size.

C. Product Schedule: For access doors and frames.

1.4 CLOSEOUT SUBMITTALS

A. Record Documents: For fire-rated doors, list of applicable room name and number in which access door is located.

PART 2 - PRODUCTS

2.1 MANUFACTURERS

A. Basis-of-Design Product:

1. J. L. Industries, Inc.; Div. of Activar Construction Products Group

B. Manufacturers: Subject to compliance with requirements, available manufacturers offering products that may be incorporated into the Work include, but are not limited to, the following

1. Babcock-Davis
2. Larsen's Manufacturing Company
3. Milcor Inc.
4. Substitutions: Under provisions of Section 012500 “Substitution Procedures”.

C. Source Limitations: Obtain each type of access door and frame from single source from single manufacturer.

2.2 ACCESS DOORS AND FRAMES

A. Flush Access Doors with Concealed Flanges:

1. Basis-of-Design Product: **Model TMW**
2. Description: Face of door flush with frame; with concealed flange for gypsum board installation and concealed hinge.
3. Locations: Wall and ceiling.
4. Uncoated Steel Sheet for Door: Nominal 0.060-inch, 16-gauge, factory primed.
5. Frame Material: Same material and thickness as door.
6. Latch and Lock: Cam latch, screwdriver operated.

2.3 MATERIALS

A. Steel Plates, Shapes, and Bars: ASTM A 36.

B. Steel Sheet: Uncoated or electrolytic zinc coated, ASTM A 879, with cold-rolled steel sheet substrate complying with ASTM A 1008, Commercial Steel (CS), exposed.

C. Frame Anchors: Same type as door face.

D. Inserts, Bolts, and Anchor Fasteners: Hot-dip galvanized steel according to ASTM A 153 or ASTM F 2329.

2.4 FABRICATION

A. General: Provide access door and frame assemblies manufactured as integral units ready for installation.

B. Metal Surfaces: For metal surfaces exposed to view in the completed Work, provide materials with smooth, flat surfaces without blemishes. Do not use materials with exposed pitting, seam marks, roller marks, rolled trade names, or roughness.

C. Doors and Frames: Grind exposed welds smooth and flush with adjacent surfaces. Furnish mounting holes, attachment devices and fasteners of type required to secure access doors to types of supports indicated.

1. For concealed flanges with drywall bead, provide edge trim for gypsum panels securely attached to perimeter of frames.

D. Latch and Lock Hardware:

1. Quantity: Furnish number of latches and locks required to hold doors tightly closed.

2.5 FINISHES

A. Comply with NAAMM's "Metal Finishes Manual for Architectural and Metal Products" for recommendations for applying and designating finishes.

B. Protect mechanical finishes on exposed surfaces from damage by applying a strippable, temporary protective covering before shipping.

C. Appearance of Finished Work: Noticeable variations in same piece are not acceptable. Variations in appearance of adjoining components are acceptable if they are within the range of approved Samples and are assembled or installed to minimize contrast.

D. Painted Finishes: Comply with coating manufacturer's written instructions for cleaning, conversion coating, and applying and baking finish.

1. Factory Primed: Apply manufacturer's standard, lead- and chromate-free, universal primer immediately after surface preparation and pretreatment.

PART 3 - EXECUTION

3.1 EXAMINATION

A. Examine substrates for compliance with requirements for installation tolerances and other conditions affecting performance of the Work.

B. Proceed with installation only after unsatisfactory conditions have been corrected.

3.2 INSTALLATION

A. Comply with manufacturer's written instructions for installing access doors and frames.

3.3 ADJUSTING

A. Adjust doors and hardware, after installation, for proper operation.

END OF SECTION 083113

SECTION 084113 - ALUMINUM-FRAMED ENTRANCES AND STOREFRONTS

PART 1 - GENERAL

1.1 RELATED DOCUMENTS

A. Drawings and general provisions of the Contract, including General and Supplementary Conditions and Division 01 Specification Sections, apply to this Section.

1.2 SUMMARY

A. Section Includes:

1. Exterior storefront framing.
2. Exterior and interior manual-swing entrance doors.

1.3 PREINSTALLATION MEETINGS

A. Preinstallation Conference: Conduct conference at Project site.

1.4 ACTION SUBMITTALS

A. Product Data: For each type of product.

1. Include construction details, material descriptions, dimensions of individual components and profiles, and finishes.

B. Shop Drawings: For aluminum-framed entrances and storefronts. Include plans, elevations, sections, full-size details, and attachments to other work.

1. Include details of provisions for assembly expansion and contraction and for draining moisture occurring within the assembly to the exterior.
2. Include full-size isometric details of each vertical-to-horizontal intersection of aluminum-framed entrances and storefronts, showing the following:

a. Joinery, including concealed welds.
b. Anchorage.
c. Expansion provisions.
d. Glazing.
e. Flashing and drainage.

3. Show connection to and continuity with adjacent thermal, weather, air, and vapor barriers.

C. Schedules: For aluminum-framed entrances, door hardware is to be submitted with Section 087100 “Door Hardware”.

D. Samples: For units with factory-applied color finishes.

E. Delegated-Design Submittal: For aluminum-framed entrances and storefronts indicated to comply with performance requirements and design criteria, including analysis data signed and sealed by the qualified professional engineer responsible for their preparation.

1.5 INFORMATIONAL SUBMITTALS

A. Qualification Data: For Installer.

B. Energy Performance Certificates: For aluminum-framed entrances and storefronts, accessories, and components, from manufacturer.

1. Basis for Certification: NFRC-certified energy performance values for each aluminum-framed entrance and storefront.

C. Product Test Reports: For aluminum-framed entrances and storefronts, for tests performed by a qualified testing agency.

D. Sample Warranties: For special warranties.

1.6 CLOSEOUT SUBMITTALS

A. Maintenance Data: For aluminum-framed entrances and storefronts to include in maintenance manuals.

1.7 QUALITY ASSURANCE

A. Installer Qualifications: An entity that employs installers and supervisors who are trained and approved by manufacturer.

B. Testing Agency Qualifications: Qualified according to ASTM E 699 for testing indicated.

C. Product Options: Information on Drawings and in Specifications establishes requirements for aesthetic effects and performance characteristics of assemblies. Aesthetic effects are indicated by dimensions, arrangements, alignment, and profiles of components and assemblies as they relate to sightlines, to one another, and to adjoining construction.

1. Do not change intended aesthetic effects, as judged solely by Architect, except with Architect's approval. If changes are proposed, submit comprehensive explanatory data to Architect for review.

1.8 WARRANTY

A. Special Warranty: Manufacturer agrees to repair or replace components of aluminum-framed entrances and storefronts that do not comply with requirements or that fail in materials or workmanship within specified warranty period.

1. Failures include, but are not limited to, the following:

a. Structural failures including, but not limited to, excessive deflection.
b. Noise or vibration created by wind and thermal and structural movements.
c. Deterioration of metals and other materials beyond normal weathering.
d. Water penetration through fixed glazing and framing areas.

e. Failure of operating components.

2. Warranty Period: Two (2) years from date of Substantial Completion.

B. Special Finish Warranty: Standard form in which manufacturer agrees to repair finishes or replace aluminum that shows evidence of deterioration of factory-applied finishes within specified warranty period.

1. Deterioration includes, but is not limited to, the following:

a. Color fading more than 5 Hunter units when tested according to ASTM D 2244.
b. Chalking in excess of a No. 8 rating when tested according to ASTM D 4214.
c. Cracking, checking, peeling, or failure of paint to adhere to bare metal.

2. Warranty Period: Twenty (20) years from date of Substantial Completion.

PART 2 - PRODUCTS

2.1 MANUFACTURERS

A. Basis-of-Design Product:

1. Kawneer North America; **Trifab VersaGlaze 451T Framing Systems, 500T Insulpour Thermal Entrances**

B. Manufacturers: Subject to compliance with requirements, available manufacturers offering products that may be incorporated into the Work include, but are not limited to, the following:

1. EFCO Corporation
2. Oldcastle BuildingEnvelope
3. TRACO
4. YKK AP America Inc.
5. Substitutions: Under provisions of Section 012500 “Substitution Procedures”.

C. Source Limitations: Obtain all components of aluminum-framed entrance and storefront system, including framing, venting windows, and accessories, from single manufacturer. Section 084413 “Glazed Aluminum Curtain Walls” must also be from this same, single manufacturer.

2.2 PERFORMANCE REQUIREMENTS

A. Delegated Design: Engage a qualified professional engineer, as defined in Section 014000 "Quality Requirements," to design aluminum-framed entrances and storefronts.

B. General Performance: Comply with performance requirements specified, as determined by testing of aluminum-framed entrances and storefronts representing those indicated for this Project without failure due to defective manufacture, fabrication, installation, or other defects in construction.

1. Aluminum-framed entrances and storefronts shall withstand movements of supporting structure including, but not limited to, story drift, twist, column shortening, long-term creep, and deflection from uniformly distributed and concentrated live loads.

2. Failure also includes the following:

    a. Thermal stresses transferring to building structure.
    b. Glass breakage.
    c. Noise or vibration created by wind and thermal and structural movements.
    d. Loosening or weakening of fasteners, attachments, and other components.
    e. Failure of operating units.

C. Structural Loads:

1. Wind and other Design Loads: As indicated on Drawings, per Building Code or as required by authorities having jurisdiction.

D. Deflection of Framing Members: At design wind pressure, as follows:

1. Deflection Normal to Wall Plane: Limited to 1/175 of clear span for spans of up to 13 feet 6 inches and to 1/240 of clear span plus ¼-inch for spans greater than 13 feet 6 inches.
2. Deflection Parallel to Glazing Plane: Limited to amount not exceeding that which reduces glazing bite to less than seventy-five percent (<75%) of design dimension and that which reduces edge clearance between framing members and glazing or other fixed components to less than 1/8-inch.

E. Structural: Test according to ASTM E 330 as follows:

1. When tested at positive and negative wind-load design pressures, storefront assemblies, including entrance doors, do not evidence deflection exceeding specified limits.
2. When tested at one hundred fifty percent (150%) of positive and negative wind-load design pressures, storefront assemblies, including entrance doors and anchorage, do not evidence material failures, structural distress, or permanent deformation of main framing members exceeding 0.2 percent of span.
3. Test Durations: As required by design wind velocity, but not less than ten (10) seconds.

F. Water Penetration under Static Pressure: Test according to ASTM E 331 as follows:

1. No evidence of water penetration through fixed glazing and framing areas, including entrance doors, when tested according to a minimum static-air-pressure differential of twenty percent (20%) of positive wind-load design pressure, but not less than 10 lbf/sq. ft.

G. Energy Performance: Certified and labeled by manufacturer for energy performance as follows:

1. Thermal Transmittance (U-factor):

    a. Fixed Glazing and Framing Areas: U-factor for the system of not more than 0.44 Btu/sq. ft. x h x deg F as determined according to NFRC 100.
    b. Entrance Doors: U-factor of not more than 0.52 Btu/sq. ft. x h x deg F as determined according to NFRC 100.

2. Solar Heat-Gain Coefficient (SHGC):

a. Fixed Glazing and Framing Areas: SHGC for the system of not more than 0.34 as determined according to NFRC 200.
b. Entrance Doors: SHGC of not more than 0.40 as determined according to NFRC 200.

3. Air Leakage:

a. Fixed Glazing and Framing Areas: Air leakage for the system of not more than 0.06 cfm/sq. ft. at a static-air-pressure differential of 6.24 lbf/sq. ft when tested according to ASTM E 283.
b. Entrance Doors: Air leakage of not more than 1.0 cfm/sq. ft. at a static-air-pressure differential of 1.57 lbf/sq. ft.

4. Condensation Resistance Factor (CRF):

a. Fixed Glazing and Framing Areas: CRF for the system of not less than 68 as determined according to AAMA 1503.
b. Entrance Doors: CRF of not less than 45 as determined according to AAMA 1503.

H. Thermal Movements: Allow for thermal movements resulting from ambient and surface temperature changes:

1. Temperature Change: 120 deg F (67 deg C), ambient; 180 deg F (100 deg C), material surfaces.

2.3 FRAMING

A. Framing Members: Manufacturer's extruded- or formed-aluminum framing members of thickness required and reinforced as required to support imposed loads.

1. Construction: Thermally broken.
2. Glazing System: Retained mechanically with gaskets on four (4) sides.
3. Glazing Plane: Front.
4. Finish: High-performance organic finish.
5. Fabrication Method: Field-fabricated stick system.

B. Backer Plates: Manufacturer's standard, continuous backer plates for framing members, if not integral, where framing abuts adjacent construction.

C. Brackets and Reinforcements: Manufacturer's standard high-strength aluminum with non-staining, nonferrous shims for aligning system components.

1. Provide internal steel reinforcement where required to meet code.

D. Materials:

1. Aluminum: Alloy and temper recommended by manufacturer for type of use and finish indicated.

a. Sheet and Plate: ASTM B 209.
b. Extruded Bars, Rods, Profiles, and Tubes: ASTM B 221.

2.4 ENTRANCE DOOR SYSTEMS

A. Entrance Doors: Manufacturer's standard glazed entrance doors for manual-swing operation.

1. Door Construction: 2¼-inch overall thickness, with minimum 0.125-inch-thick, extruded-aluminum tubular rail and stile members. Mechanically fasten corners with reinforcing brackets that are deeply penetrated and fillet welded or that incorporate concealed tie rods.
2. Door Design: Wide stile; 5-inch nominal width.
3. Glazing Stops and Gaskets: Square, snap-on, extruded-aluminum stops and preformed gaskets.

    a. Provide non-removable glazing stops on outside of door.

2.5 ENTRANCE DOOR HARDWARE

A. Entrance Door Hardware: Hardware not specified in this section is specified in Section 087100 "Door Hardware."

B. Weather Stripping: Manufacturer's standard replaceable components.

1. Compression Type: Made of ASTM D 2000, molded neoprene, or ASTM D 2287, molded PVC.
2. Sliding Type: AAMA 701/702, made of wool, polypropylene, or nylon woven pile with nylon-fabric or aluminum-strip backing.

2.6 GLAZING

A. Glazing: Comply with Section 088000 "Glazing."

2.7 ACCESSORIES

A. Fasteners and Accessories: Manufacturer's standard corrosion-resistant, non-staining, nonbleeding fasteners and accessories compatible with adjacent materials.

1. Use self-locking devices where fasteners are subject to loosening or turning out from thermal and structural movements, wind loads, or vibration.
2. Reinforce members as required to receive fastener threads.

B. Anchors: Three-way adjustable anchors with minimum adjustment of 1-inch that accommodate fabrication and installation tolerances in material and finish compatible with adjoining materials and recommended by manufacturer.

1. Concrete and Masonry Inserts: Hot-dip galvanized cast-iron, malleable-iron, or steel inserts complying with ASTM A 123 or ASTM A 153 requirements.

C. Concealed Flashing: Manufacturer's standard corrosion-resistant, non-staining, nonbleeding flashing compatible with adjacent materials.

D. Bituminous Paint: Cold-applied asphalt-mastic paint complying with SSPC-Paint 12 requirements except containing no asbestos, formulated for 30-mil thickness per coat.

2.8 FABRICATION

A. Form or extrude aluminum shapes before finishing.

B. Weld in concealed locations to greatest extent possible to minimize distortion or discoloration of finish. Remove weld spatter and welding oxides from exposed surfaces by descaling or grinding.

C. Fabricate components that, when assembled, have the following characteristics:

1. Profiles that are sharp, straight, and free of defects or deformations.
2. Accurately fitted joints with ends coped or mitered.
3. Physical and thermal isolation of glazing from framing members.
4. Accommodations for thermal and mechanical movements of glazing and framing to maintain required glazing edge clearances.
5. Provisions for field replacement of glazing from interior for vision glass and exterior for spandrel glazing or metal panels.
6. Fasteners, anchors, and connection devices that are concealed from view to greatest extent possible.

D. Mechanically Glazed Framing Members: Fabricate for flush glazing without projecting stops.

E. Storefront Framing: Fabricate components for assembly using screw-spline system.

F. Entrance Door Frames: Reinforce as required to support loads imposed by door operation and for installing entrance door hardware.

1. At exterior doors, provide compression weather stripping at fixed stops.
2. At interior doors, provide silencers at stops to prevent metal-to-metal contact. Install three (3) silencers on strike jamb of single-door frames and two (2) silencers on head of frames for pairs of doors.

G. Entrance Doors: Reinforce doors as required for installing entrance door hardware.

1. At pairs of exterior doors, provide sliding-type weather stripping retained in adjustable strip and mortised into door edge.
2. At exterior doors, provide weather sweeps applied to door bottoms.

H. Entrance Door Hardware Installation: Factory install entrance door hardware to the greatest extent possible. Cut, drill, and tap for factory-installed entrance door hardware before applying finishes.

I. After fabrication, clearly mark components to identify their locations in Project according to Shop Drawings.

2.9 ALUMINUM FINISHES

A. High-Performance Organic Finish: Two-coat fluoropolymer finish complying with AAMA 2605 and containing not less than seventy percent (70%) PVDF resin by weight in color coat. Prepare, pretreat, and apply coating to exposed metal surfaces to comply with coating and resin manufacturers' written instructions.

1. Color and Gloss: As selected by Architect and Owner from manufacturer's full range.

PART 3 - EXECUTION

3.1 EXAMINATION

A. Examine areas, with Installer present, for compliance with requirements for installation tolerances and other conditions affecting performance of the Work.

B. Proceed with installation only after unsatisfactory conditions have been corrected.

3.2 INSTALLATION

A. General:

1. Comply with manufacturer's written instructions.
2. Do not install damaged components.
3. Fit joints to produce hairline joints free of burrs and distortion.
4. Rigidly secure non-movement joints.
5. Install anchors with separators and isolators to prevent metal corrosion and electrolytic deterioration and to prevent impeding movement of moving joints.
6. Seal perimeter and other joints watertight unless otherwise indicated.

B. Metal Protection:

1. Where aluminum is in contact with dissimilar metals, protect against galvanic action by painting contact surfaces with materials recommended by manufacturer for this purpose or by installing nonconductive spacers.
2. Where aluminum is in contact with concrete or masonry, protect against corrosion by painting contact surfaces with bituminous paint.

C. Set continuous sill members and flashing in full sealant bed as specified in Section 079200 "Joint Sealants" to produce weathertight installation.

D. Install components plumb and true in alignment with established lines and grades.

E. Install glazing as specified in Section 088000 "Glazing."

F. Entrance Doors: Install doors to produce smooth operation and tight fit at contact points.

1. Install to produce weathertight enclosure and tight fit at weather stripping.
2. Field-Installed Entrance Door Hardware: Install surface-mounted entrance door hardware according to entrance door hardware manufacturers' written instructions using concealed fasteners to greatest extent possible.

3.3 ERECTION TOLERANCES

A. Erection Tolerances: Install aluminum-framed entrances and storefronts to comply with the following maximum tolerances:

1. Plumb: 1/8-inch in 10 feet; ¼-inch in 40 feet.

2. Level: 1/8-inch in 20 feet; ¼-inch in 40 feet.
3. Alignment:

    a. Where surfaces abut in line or are separated by reveal or protruding element up to ½ inch wide, limit offset from true alignment to 1/16-inch.
    b. Where surfaces are separated by reveal or protruding element from ½- to 1-inch-wide, limit offset from true alignment to 1/8-inch.
    c. Where surfaces are separated by reveal or protruding element of 1-inch-wide or more, limit offset from true alignment to ¼-inch.

4. Location: Limit variation from plane to 1/8- inch in 12 feet; ½-inch over total length.

END OF SECTION 084113

SECTION 084413 - GLAZED ALUMINUM CURTAIN WALLS

PART 1 - GENERAL

1.1 RELATED DOCUMENTS

A. Drawings and general provisions of the Contract, including General and Supplementary Conditions and Division 01 Specification Sections, apply to this Section.

1.2 SUMMARY

A. Section includes conventionally glazed aluminum curtain walls installed as unit-and-mullion assemblies.

1.3 PREINSTALLATION MEETINGS

A. Preinstallation Conference: Conduct conference at Project site.

1.4 ACTION SUBMITTALS

A. Product Data: For each type of product.

1. Include construction details, material descriptions, dimensions of individual components and profiles, and finishes.

B. Shop Drawings: For glazed aluminum curtain walls. Include plans, elevations, sections, full-size details, and attachments to other work.

1. Include details of provisions for assembly expansion and contraction and for draining moisture occurring within the assembly to the exterior.
2. Include full-size isometric details of each vertical-to-horizontal intersection of glazed aluminum curtain walls, showing the following:

   a. Joinery, including concealed welds.
   b. Anchorage.
   c. Expansion provisions.
   d. Glazing.
   e. Flashing and drainage.

3. Show connection to and continuity with adjacent thermal, weather, air, and vapor barriers.

C. Samples: For units with factory-applied color finishes.

D. Delegated-Design Submittal: For glazed aluminum curtain walls indicated to comply with performance requirements and design criteria, including analysis data signed and sealed by the qualified professional engineer responsible for their preparation.

1.5 INFORMATIONAL SUBMITTALS

A. Qualification Data: For Installer.

B. Energy Performance Certificates: For glazed aluminum curtain walls, accessories, and components from manufacturer.

1. Basis for Certification: NFRC-certified energy performance values for each glazed aluminum curtain wall.

C. Product Test Reports: For glazed aluminum curtain walls, for tests performed by manufacturer and witnessed by a qualified testing agency.

D. Source quality-control reports.

E. Sample Warranties: For special warranties.

1.6 CLOSEOUT SUBMITTALS

A. Maintenance Data: For glazed aluminum curtain walls to include in maintenance manuals.

1.7 QUALITY ASSURANCE

A. Installer Qualifications: An entity that employs installers and supervisors who are trained and approved by manufacturer.

B. Product Options: Information on Drawings and in Specifications establishes requirements for aesthetic effects and performance characteristics of assemblies. Aesthetic effects are indicated by dimensions, arrangements, alignment, and profiles of components and assemblies as they relate to sightlines, to one another, and to adjoining construction.

1. Do not change intended aesthetic effects, as judged solely by Architect, except with Architect's approval. If changes are proposed, submit comprehensive explanatory data to Architect for review.

1.8 WARRANTY

A. Special Assembly Warranty: Manufacturer agrees to repair or replace components of glazed aluminum curtain wall that do not comply with requirements or that fail in materials or workmanship within specified warranty period.

1. Failures include, but are not limited to, the following:

a. Structural failures including, but not limited to, excessive deflection.
b. Noise or vibration created by wind and thermal and structural movements.
c. Deterioration of metals and other materials beyond normal weathering.
d. Water penetration through fixed glazing and framing areas.

2. Warranty Period: Two (2) years from date of Substantial Completion.

B. Special Finish Warranty: Standard form in which manufacturer agrees to repair finishes or replace aluminum that shows evidence of deterioration of factory-applied finishes within specified warranty period.

1. Deterioration includes, but is not limited to, the following:

a. Color fading more than 5 Hunter units when tested according to ASTM D 2244.
b. Chalking in excess of a No. 8 rating when tested according to ASTM D 4214.
c. Cracking, checking, peeling, or failure of paint to adhere to bare metal.

2. Warranty Period: Twenty (20) years from date of Substantial Completion.

PART 2 - PRODUCTS

2.1 PERFORMANCE REQUIREMENTS

A. Delegated Design: Engage a qualified professional engineer, as defined in Section 014000 "Quality Requirements," to design glazed aluminum curtain walls.

B. General Performance: Comply with performance requirements specified, as determined by testing of glazed aluminum curtain walls representing those indicated for this Project without failure due to defective manufacture, fabrication, installation, or other defects in construction.

1. Glazed aluminum curtain walls shall withstand movements of supporting structure including, but not limited to, story drift, twist, column shortening, long-term creep, and deflection from uniformly distributed and concentrated live loads.
2. Failure also includes the following:

a. Thermal stresses transferring to building structure.
b. Glass breakage.
c. Noise or vibration created by wind and thermal and structural movements.
d. Loosening or weakening of fasteners, attachments, and other components.

C. Structural Loads:

1. Wind and other Design Loads: As indicated on Drawings, per the Building Code, or as required by authorities having jurisdiction.

D. Deflection of Framing Members: At design wind pressure, as follows:

1. Deflection Normal to Wall Plane: Limited to edge of glass in a direction perpendicular to glass plane not exceeding L/175 of the glass edge length for each individual glazing lite or an amount that restricts edge deflection of individual glazing lites to ¾-inch, whichever is less.
2. Deflection Parallel to Glazing Plane: Limited to L/360 of clear span or 1/8-inch, whichever is smaller.

E. Structural: Test according to ASTM E 330 as follows:

1. When tested at positive and negative wind-load design pressures, assemblies do not evidence deflection exceeding specified limits.

2. When tested at one hundred fifty percent (150%) of positive and negative wind-load design pressures, assemblies, including anchorage, do not evidence material failures, structural distress, or permanent deformation of main framing members exceeding 0.2 percent of span.
3. Test Durations: As required by design wind velocity, but not less than 10 seconds.

F. Air Infiltration: Test according to ASTM E 283 for infiltration as follows:

1. Fixed Framing and Glass Area:

a. Maximum air leakage of 0.06 cfm/sq. ft. at a static-air-pressure differential of 6.24 lbf/sq. ft.

G. Water Penetration under Static Pressure: Test according to ASTM E 331 as follows:

1. No evidence of water penetration through fixed glazing and framing areas when tested according to a minimum static-air-pressure differential of twenty percent (20%) of positive wind-load design pressure, but not less than 15 lbf/sq. ft.

H. Water Penetration under Dynamic Pressure: Test according to AAMA 501.1 as follows:

1. No evidence of water penetration through fixed glazing and framing areas when tested according to a minimum static-air-pressure differential of twenty percent (20%) of positive wind-load design pressure, but not less than 15 lbf/sq. ft.
2. Maximum Water Leakage: According to AAMA 501.1. Water leakage does not include water controlled by flashing and gutters, or water that is drained to exterior.

I. Seismic Performance: Glazed aluminum curtain walls shall withstand the effects of earthquake motions determined according to ASCE/SEI 7.

J. Energy Performance: Certify and label energy performance according to NFRC as follows:

1. Thermal Transmittance (U-factor): Fixed glazing and framing areas shall have U-factor of not more than 0.33 Btu/sq. ft. x h x deg F as determined according to NFRC 100.
2. Solar Heat Gain Coefficient: Fixed glazing and framing areas shall have a solar heat gain coefficient of no greater than 0.34 as determined according to NFRC 200.
3. Condensation Resistance: Fixed glazing and framing areas shall have an NFRC-certified condensation resistance rating of no less than 15 as determined according to NFRC 500.

K. Thermal Movements: Allow for thermal movements resulting from ambient and surface temperature changes:

1. Temperature Change: 120 deg F (67 deg C), ambient; 180 deg F (100 deg C), material surfaces.

2.2 MANUFACTURERS

A. Basis-of-Design Product:

1. Kawneer North America; **1620UT Curtain Wall**

B. Manufacturers: Subject to compliance with requirements, available manufacturers offering products that may be incorporated into the Work include, but are not limited to, the following:

1. EFCO Corporation
2. Oldcastle BuildingEnvelope
3. TRACO
4. YKK AP America Inc.
5. Substitutions: Under provisions of Section 012500 "Substitution Procedures".

C. Source Limitations: Obtain all components of curtain wall system, including framing, venting windows, entrances, and sun control from single manufacturer. Section 084113 "Aluminum-Framed Entrances and Storefronts" must also be from this same, single manufacturer.

2.3 FRAMING

A. Framing Members: Manufacturer's extruded- or formed-aluminum framing members of thickness required and reinforced as required to support imposed loads.

1. Construction: Thermally broken.
2. Glazing System: Retained mechanically with gaskets on four (4) sides.
3. Glazing Plane: Front.
4. Finish: High-performance organic finish.
5. Fabrication Method: Factory-fabricated unit and mullion system.

B. Pressure Caps: Manufacturer's standard aluminum components that mechanically retain glazing.

1. Include snap-on aluminum trim that conceals fasteners.

C. Brackets and Reinforcements: Manufacturer's standard high-strength aluminum with non-staining, nonferrous shims for aligning system components.

1. Provide internal steel reinforcement where required to meet code.

D. Materials:

1. Aluminum: Alloy and temper recommended by manufacturer for type of use and finish indicated.

a. Sheet and Plate: ASTM B 209.
b. Extruded Bars, Rods, Profiles, and Tubes: ASTM B 221.
c. Extruded Structural Pipe and Tubes: ASTM B 429.
d. Structural Profiles: ASTM B 308.

2. Steel Reinforcement: Manufacturer's standard zinc-rich, corrosion-resistant primer complying with SSPC-PS Guide No. 12.00; applied immediately after surface preparation and pretreatment. Select surface preparation methods according to recommendations in SSPC-SP COM and prepare surfaces according to applicable SSPC standard.

a. Structural Shapes, Plates, and Bars: ASTM A 36.
b. Cold-Rolled Sheet and Strip: ASTM A 1008.
c. Hot-Rolled Sheet and Strip: ASTM A 1011.

2.4 ENTRANCES

A. Entrances: Comply with Section 084113 "Aluminum-Framed Entrances and Storefronts."

2.5 GLAZING

A. Glazing: Comply with Section 088000 "Glazing."

B. Glazing Gaskets: Manufacturer's standard sealed-corner pressure-glazing system of black, resilient elastomeric glazing gaskets, setting blocks, and shims or spacers.

C. Glazing Sealants: As recommended by manufacturer.

2.6 ACCESSORIES

A. Fasteners and Accessories: Manufacturer's standard corrosion-resistant, non-staining, nonbleeding fasteners and accessories compatible with adjacent materials.

1. Use self-locking devices where fasteners are subject to loosening or turning out from thermal and structural movements, wind loads, or vibration.
2. Reinforce members as required to receive fastener threads.
3. Use exposed fasteners with countersunk Phillips screw heads, fabricated from 300 series stainless-steel.

B. Anchors: Three-way adjustable anchors with minimum adjustment of 1-inch that accommodate fabrication and installation tolerances in material and finish compatible with adjoining materials and recommended by manufacturer.

1. Concrete and Masonry Inserts: Hot-dip galvanized cast-iron, malleable-iron, or steel inserts complying with ASTM A 123 or ASTM A 153 requirements.

C. Concealed Flashing: Manufacturer's standard corrosion-resistant, non-staining, nonbleeding flashing compatible with adjacent materials.

D. Bituminous Paint: Cold-applied asphalt-mastic paint complying with SSPC-Paint 12 requirements except containing no asbestos, formulated for 30-mil thickness per coat.

2.7 FABRICATION

A. Form or extrude aluminum shapes before finishing.

B. Weld in concealed locations to greatest extent possible to minimize distortion or discoloration of finish. Remove weld spatter and welding oxides from exposed surfaces by descaling or grinding.

C. Fabricate components that, when assembled, have the following characteristics:

1. Profiles that are sharp, straight, and free of defects or deformations.
2. Accurately fitted joints with ends coped or mitered.
3. Physical and thermal isolation of glazing from framing members.
4. Accommodations for thermal and mechanical movements of glazing and framing to maintain required glazing edge clearances.

5. Provisions for field replacement of glazing from exterior.
6. Fasteners, anchors, and connection devices that are concealed from view to greatest extent possible.

D. Fabricate components to resist water penetration as follows:

1. Internal guttering system or other means to drain water passing joints, condensation occurring within framing members, and moisture migrating within glazed aluminum curtain wall to exterior.

E. Factory-Assembled Frame Units:

1. Rigidly secure nonmovement joints.
2. Preparation includes, but is not limited to, cleaning and priming surfaces.
3. Seal joints watertight unless otherwise indicated.
4. Install glazing to comply with requirements in Section 088000 "Glazing."

F. After fabrication, clearly mark components to identify their locations in Project according to Shop Drawings.

2.8 ALUMINUM FINISHES

A. High-Performance Organic Finish: Two-coat fluoropolymer finish complying with AAMA 2605 and containing not less than seventy percent (70%) PVDF resin by weight in color coat. Prepare, pretreat, and apply coating to exposed metal surfaces to comply with coating and resin manufacturers' written instructions.

1. Color and Gloss: As selected by Architect and Owner from manufacturer's full range.

PART 3 - EXECUTION

3.1 EXAMINATION

A. Examine areas, with Installer present, for compliance with requirements for installation tolerances and other conditions affecting performance of the Work.

B. Proceed with installation only after unsatisfactory conditions have been corrected.

3.2 INSTALLATION

A. General:

1. Comply with manufacturer's written instructions.
2. Do not install damaged components.
3. Fit joints to produce hairline joints free of burrs and distortion.
4. Rigidly secure nonmovement joints.
5. Install anchors with separators and isolators to prevent metal corrosion and electrolytic deterioration and to prevent impeding movement of moving joints.
6. Where welding is required, weld components in concealed locations to minimize distortion or discoloration of finish. Protect glazing surfaces from welding.
7. Seal joints watertight unless otherwise indicated.

B. Metal Protection:

1. Where aluminum is in contact with dissimilar metals, protect against galvanic action by painting contact surfaces with primer, applying sealant or tape, or installing nonconductive spacers as recommended by manufacturer for this purpose.
2. Where aluminum is in contact concrete or masonry, protect against corrosion by painting contact surfaces with bituminous paint.

C. Install components to drain water passing joints, condensation occurring within framing members, and moisture migrating within glazed aluminum curtain wall to exterior.

D. Install components plumb and true in alignment with established lines and grades.

3.3 ERECTION TOLERANCES

A. Erection Tolerances: Install glazed aluminum curtain walls to comply with the following maximum tolerances:

1. Plumb: 1/8-inch in 10 feet; ¼-inch in 40 feet.
2. Level: 1/8-inch in 20 feet; ¼-inch in 40 feet.
3. Alignment:

   a. Where surfaces abut in line or are separated by reveal or protruding element up to ½-inch-wide, limit offset from true alignment to 1/16-inch.
   b. Where surfaces are separated by reveal or protruding element from ½- to 1-inch-wide, limit offset from true alignment to 1/8-inch.
   c. Where surfaces are separated by reveal or protruding element of 1-inch-wide or more, limit offset from true alignment to ¼-inch.

4. Location: Limit variation from plane to 1/8-inch in 12 feet; ½-inch over total length.

END OF SECTION 084413

SECTION 085200 - WOOD WINDOWS

PART 1 - GENERAL

1.1 RELATED DOCUMENTS

A. Drawings and general provisions of the Contract, including General and Supplementary Conditions and Division 01 Specification Sections, apply to this Section.

1.2 SUMMARY

A. Section includes aluminum-clad wood windows.

1.3 ACTION SUBMITTALS

A. Product Data: For each type of product.

1. Include construction details, material descriptions, glazing and fabrication methods, dimensions of individual components and profiles, hardware, and finishes for wood windows.

B. Shop Drawings: For wood windows.

1. Include plans, elevations, sections, hardware, accessories, insect screens, operational clearances, and details of installation, including anchor, flashing, and sealant installation.

C. Samples: For each exposed product and for each color specified, 2 by 4 inches in size.

1.4 INFORMATIONAL SUBMITTALS

A. Qualification Data: For Manufacturer and Installer.

B. Product Test Reports: For each type of wood window, for tests performed by a qualified testing agency.

C. Sample Warranties: For manufacturer's warranties.

1.5 QUALITY ASSURANCE

A. Manufacturer Qualifications: A manufacturer capable of fabricating wood windows that meet or exceed performance requirements indicated and of documenting this performance by test reports, and calculations.

B. Installer Qualifications: An installer acceptable to wood window manufacturer for installation of units required for this Project.

1.6 WARRANTY

A. Manufacturer's Warranty: Manufacturer agrees to repair or replace wood windows that fail in materials or workmanship within specified warranty period.

1. Failures include, but are not limited to, the following:

    a. Failure to meet performance requirements.
    b. Structural failures including excessive deflection, water leakage, and air infiltration.
    c. Faulty operation of movable sash and hardware.
    d. Deterioration of materials and finishes beyond normal weathering.
    e. Failure of insulating glass.

2. Warranty Period:

    a. Window: Ten (10) years from date of Substantial Completion.
    b. Glazing Units: Twenty (20) years from date of Substantial Completion.
    c. Aluminum-Cladding Finish: Twenty (20) years from date of Substantial Completion.

PART 2 - PRODUCTS

2.1 MANUFACTURERS

A. Source Limitations: Obtain wood windows from single source from single manufacturer.

2.2 WINDOW PERFORMANCE REQUIREMENTS

A. Product Standard: Comply with AAMA/WDMA/CSA 101/I.S.2/A440 for definitions and minimum standards of performance, materials, components, accessories, and fabrication unless more stringent requirements are indicated.

    1. Window Certification: WDMA certified with label attached to each window.

B. Performance Class and Grade: AAMA/WDMA/CSA 101/I.S.2/A440 as follows:

    1. Minimum Performance Class: CW.
    2. Minimum Performance Grade: 30.

C. Thermal Transmittance: NFRC 100 maximum whole-window U-factor of 0.30 Btu/sq. ft. x h x deg F.

2.3 WOOD WINDOWS

A. Aluminum-Clad Wood Windows:

    1. Basis of Design:

        a. Pella Corporation; **Reserve – Traditional**

    2. Manufacturers: Subject to compliance with requirements, available manufacturers offering products that may be incorporated into the Work include, but are not limited to, the following:

        a. Eagle Window & Door, Inc., a subsidiary of Andersen Corporation

b. Jeld-Wen, Inc.
c. Kolbe & Kolbe Millwork Co., Inc.
d. Marvin Windows and Doors
e. Weather Shield Manufacturing, Inc.
f. Substitutions: Under provisions of Section 012500 “Substitution Procedures”.

B. Operating Types: Provide the following operating types in locations indicated on Drawings:

1. Double hung.
2. Fixed.

C. Frames and Sashes: Fine-grained wood lumber complying with AAMA/WDMA/CSA 101/I.S.2/A440; kiln dried to a moisture content of not more than twelve percent (12%) at time of fabrication; free of visible finger joints, blue stain, knots, pitch pockets, and surface checks larger than 1/32-inch-deep by 2 inches wide; water-repellent preservative treated.

1. Exterior Finish: Aluminum-clad wood.

a. Aluminum Finish: Manufacturer's standard fluoropolymer two-coat system with fluoropolymer color topcoat containing not less than seventy percent (70%) polyvinylidene fluoride resin by weight and complying with AAMA 2605.
b. Color: As selected by Architect and Owner from manufacturer's entire range.

2. Interior Finish: Manufacturer’s standard factory-prime coat.

D. Insulating-Glass Units: ASTM E 2190.

1. Glass: **GL-12**, as indicated in Section 088000 “Glazing”.

E. Glazing System: Manufacturer's standard factory-glazing system that produces weathertight seal.

F. Hardware, General: Provide manufacturer's standard hardware fabricated from aluminum, stainless-steel, carbon steel complying with AAMA 907, or other corrosion-resistant material compatible with adjacent materials; designed to smoothly operate, tightly close, and securely lock windows, and sized to accommodate sash weight and dimensions.

1. Exposed Hardware Color and Finish: Satin nickel.

G. Hung Window Hardware:

1. Counterbalancing Mechanism: Complying with AAMA 902, concealed, of size and capacity to hold sash stationary at any open position.
2. Locks and Latches: Allow unobstructed movement of the sash across adjacent sash in direction indicated and operated from the inside only.
3. Tilt Hardware: Releasing tilt latch allows sash to pivot about horizontal axis to facilitate cleaning exterior surfaces from the interior.

H. Weather Stripping: Provide full-perimeter weather stripping for each operable sash unless otherwise indicated.

I. Fasteners: Noncorrosive and compatible with window members, trim, hardware, anchors, and other components.

1. Exposed Fasteners: Do not use exposed fasteners to the greatest extent possible. For application of hardware, use fasteners that match finish hardware being fastened.

2.4 ACCESSORIES

A. Dividers (False Muntins): Provide divider grilles in designs indicated for each sash lite.

1. Quantity and Type: Two (2) per sash, permanently located at exterior and interior lites with spacer removable from exposed surfaces at exterior and interior lites, unless otherwise noted.
2. Material: Manufacturer's standard.
3. Pattern: As indicated on Drawings.
4. Profile: As selected by Architect and Owner from manufacturer's entire range.
5. Color: To match frame, interior and exterior.

2.5 INSECT SCREENS

A. General: Fabricate insect screens to integrate with window frame. Provide screen for each operable exterior sash. Screen wickets are not permitted.

1. Type and Location: Full, outside for double-hung sashes.

B. Aluminum Frames: Manufacturer's standard aluminum alloy complying with SMA 1004 or SMA 1201. Fabricate frames with mitered or coped joints or corner extrusions, concealed fasteners, and removable PVC spline/anchor concealing edge of frame.

1. Tubular Framing Sections and Cross Braces: Roll formed from aluminum sheet.
2. Finish for Exterior Screens: Matching color and finish of cladding.

C. Glass-Fiber Mesh Fabric: 18-by-14 or 18-by-16 mesh of PVC-coated, glass-fiber threads; woven and fused to form a fabric mesh resistant to corrosion, shrinkage, stretch, impact damage, and weather deterioration. Comply with ASTM D 3656.

1. Mesh Color: Manufacturer's standard.

2.6 FABRICATION

A. Fabricate wood windows in sizes indicated. Include a complete system for installing and anchoring windows.

B. Glaze wood windows in the factory.

C. Weather strip each operable sash to provide weathertight installation.

D. Complete fabrication, assembly, finishing, hardware application, and other work in the factory to greatest extent possible. Disassemble components only as necessary for shipment and installation. Allow for scribing, trimming, and fitting at Project site.

PART 3 - EXECUTION

3.1 EXAMINATION

A. Examine openings, substrates, structural support, anchorage, and conditions, with Installer present, for compliance with requirements for installation tolerances and other conditions affecting performance of the Work.

B. Verify rough opening dimensions, levelness of sill plate, and operational clearances.

C. Examine wall flashings, vapor retarders, water and weather barriers, and other built-in components to ensure weathertight window installation.

D. Proceed with installation only after unsatisfactory conditions have been corrected.

3.2 INSTALLATION

A. Comply with manufacturer's written instructions for installing windows, hardware, accessories, and other components. For installation procedures and requirements not addressed in manufacturer's written instructions, comply with installation requirements in ASTM E 2112.

B. Install windows level, plumb, square, true to line, without distortion, anchored securely in place to structural support, and in proper relation to wall flashing and other adjacent construction to produce weathertight construction.

3.3 ADJUSTING, CLEANING, AND PROTECTION

A. Adjust operating sashes and hardware for a tight fit at contact points and weather stripping for smooth operation and weathertight closure.

B. Clean exposed surfaces immediately after installing windows. Remove excess sealants, glazing materials, dirt, and other substances.

1. Keep protective films and coverings in place until final cleaning.

C. Remove and replace sashes if glass has been broken, chipped, cracked, abraded, or damaged during construction period.

D. Protect window surfaces from contact with contaminating substances resulting from construction operations. If contaminating substances do contact window surfaces, remove contaminants immediately according to manufacturer's written instructions.

END OF SECTION 085200

SECTION 087100 - DOOR HARDWARE

PART 1 - GENERAL

1.1 RELATED DOCUMENTS

A. Drawings and general provisions of the Contract, including General and Supplementary Conditions and Division 01 Specification Sections, apply to this Section.

1.2 SUMMARY

A. Section includes:

1. Mechanical door hardware for the following:

   a. Swinging doors.

2. Electrified door hardware.

B. Related Sections:

1. Section 064113 “Wood-Veneer-Faced Architectural Cabinets” for cabinet door hardware provided with cabinets.
2. Section 081113 "Hollow Metal Doors and Frames" for door silencers provided as part of hollow-metal frames.
3. Section 084113 “Aluminum-Framed Entrances and Storefronts” for installation of entrance door hardware, except cylinders.

1.3 COORDINATION

A. Installation Templates: Distribute for doors, frames, and other work specified to be factory prepared. Check Shop Drawings of other work to confirm that adequate provisions are made for locating and installing door hardware to comply with indicated requirements.

B. Electrical System Roughing-In: Coordinate layout and installation of electrified door hardware with connections to power supplies.

C. Existing Openings: Where hardware components are scheduled for application to existing construction or where modifications to existing door hardware are required, field verify existing conditions and coordinate installation of door hardware to suit opening conditions and to provide proper door operation.

1.4 PREINSTALLATION MEETINGS

A. Preinstallation Conference: Conduct conference at Project site.

1. Review and finalize construction schedule and verify availability of materials, Installer's personnel, equipment, and facilities needed to make progress and avoid delays.
2. Inspect and discuss preparatory work performed by other trades.
3. Inspect and discuss electrical roughing-in for electrified door hardware.

4. Review sequence of operation for each type of electrified door hardware.
5. Review required testing, inspecting, and certifying procedures.

B. Keying Conference: Conduct conference at Project site."

1. Conference participants shall also include Installer's Architectural Hardware Consultant.
2. Incorporate conference decisions into keying schedule after reviewing door hardware keying system including, but not limited to, the following:

   a. Flow of traffic and degree of security required.
   b. Preliminary key system schematic diagram.
   c. Requirements for key control system.
   d. Requirements for access control.
   e. Address for delivery of keys.

1.5 ACTION SUBMITTALS

A. Product Data: For each type of product.

1. Include construction details, material descriptions, dimensions of individual components and profiles, and finishes.

B. Shop Drawings: Details of electrified door hardware, indicating the following:

1. Include diagrams for power, signal, and control wiring.

C. Samples: For each exposed product in each finish specified, in manufacturer's standard size.

1. Tag Samples with full product description to coordinate Samples with door hardware schedule.

D. Door Hardware Schedule: Prepared by or under the supervision of Installer. Coordinate door hardware schedule with doors, frames, and related work to ensure proper size, thickness, hand, function, and finish of door hardware.

1. Submittal Sequence: Submit door hardware schedule concurrent with submissions of Product Data, Shop Drawings, and Samples. Coordinate submission of door hardware schedule with scheduling requirements of other work to facilitate the fabrication of other work that is critical in Project construction schedule.
2. Format: Use same scheduling sequence and format and use same door numbers as in the door hardware schedule in the Contract Documents.
3. Content: Include the following information:

   a. Identification number, location, hand, size, and material of each door and frame.
   b. Locations of each door hardware set, cross-referenced to Drawings on floor plans and to door and frame schedule.
   c. Complete designations, including name and manufacturer, type, style, function, size, quantity, function, and finish of each door hardware product.
   d. Fastenings and other pertinent information.
   e. Explanation of abbreviations, symbols, and designations contained in door hardware schedule.

f. Mounting locations for door hardware.
g. List of related door devices specified in other Sections for each door and frame.

E. Keying Schedule: Prepared by or under the supervision of Installer, detailing Owner's final keying instructions for locks. Include schematic keying diagram and index each key set to unique door designations that are coordinated with the Contract Documents.

1.6 INFORMATIONAL SUBMITTALS

A. Qualification Data: For Installer.

B. Product Certificates: For each type of electrified door hardware.

C. Product Test Reports: For compliance with accessibility requirements, for tests performed by manufacturer and witnessed by a qualified testing agency, for door hardware on doors located in accessible routes.

D. Sample Warranty: For special warranty.

1.7 CLOSEOUT SUBMITTALS

A. Maintenance Data: For each type of door hardware to include in maintenance manuals.

B. Schedules: Final door hardware and keying schedule.

1.8 QUALITY ASSURANCE

A. Installer Qualifications: Supplier of products and an employer of workers trained and approved by product manufacturers who is available during the course of the Work to consult with Contractor, Architect, and Owner about door hardware and keying.

1. Warehousing Facilities: In Project's vicinity.
2. Scheduling Responsibility: Preparation of door hardware and keying schedules.
3. Engineering Responsibility: Preparation of data for electrified door hardware, including Shop Drawings, based on testing and engineering analysis of manufacturer's standard units in assemblies similar to those indicated for this Project.

1.9 DELIVERY, STORAGE, AND HANDLING

A. Inventory door hardware on receipt and provide secure lock-up for door hardware delivered to Project site.

B. Tag each item or package separately with identification coordinated with the final door hardware schedule, and include installation instructions, templates, and necessary fasteners with each item or package.

C. Deliver keys to Owner by registered mail or overnight package service.

1.10 WARRANTY

A. Special Warranty: Manufacturer's agrees to repair or replace components of door hardware that fail in materials or workmanship within specified warranty period.

1. Failures include, but are not limited to, the following:

    a. Structural failures including excessive deflection, cracking, or breakage.
    b. Faulty operation of doors and door hardware.
    c. Deterioration of metals, metal finishes, and other materials beyond normal weathering and use.

2. Warranty Period: Three (3) years from date of Substantial Completion, unless otherwise indicated.

    a. Exit Devices: Two (2) years from date of Substantial Completion.
    b. Manual Closers: Ten (10) years from date of Substantial Completion.
    c. Power Operators: Two (2) years from date of Substantial Completion.

PART 2 - PRODUCTS

2.1 MANUFACTURERS

A. Source Limitations: Obtain each type of door hardware from single manufacturer.

1. Provide electrified door hardware from same manufacturer as mechanical door hardware, unless otherwise indicated. Manufacturers that perform electrical modifications and that are listed by a testing and inspecting agency acceptable to authorities having jurisdiction are acceptable.

2.2 PERFORMANCE REQUIREMENTS

A. Smoke- and Draft-Control Door Assemblies: Where smoke- and draft-control door assemblies are required, provide door hardware that complies with requirements of assemblies tested according to UL 1784 and installed in compliance with NFPA 105.

1. Air Leakage Rate: Maximum air leakage of 0.3 cfm/sq. ft. at the tested pressure differential of 0.3-inch wg of water.

B. Electrified Door Hardware: Listed and labeled as defined in NFPA 70, by a qualified testing agency, and marked for intended location and application.

C. Means of Egress Doors: Latches do not require more than 15 lbf to release the latch. Locks do not require use of a key, tool, or special knowledge for operation.

D. Accessibility Requirements: For door hardware on doors in an accessible route, comply with ICC/ANSI A117.1.

1. Provide operating devices that do not require tight grasping, pinching, or twisting of the wrist and that operate with a force of not more than 5 lbf.
2. Comply with the following maximum opening-force requirements:

    a. Interior, Non-Fire-Rated Hinged Doors: 5 lbf applied perpendicular to door.

3. Bevel raised thresholds with a slope of not more than 1:2. Provide thresholds not more than ½-inch-high.

4. Adjust door closer sweep periods so that, from an open position of 90 degrees, the door will take at least 5 seconds to move to a point 3 inches (12 degrees) from the latch.
5. Adjust spring hinges so that, from an open position of 70 degrees, the door will take at least 1.5 seconds to move to the closed position.

2.3 SCHEDULED DOOR HARDWARE

A. Provide door hardware for each door as scheduled in Part 3 "Door Hardware Schedule" Article to comply with requirements in this Section.

1. Door Hardware Sets: Provide quantity, item, size, finish or color indicated, and products equivalent in function and comparable in quality to named products, where allowed.

B. Designations: Requirements for design, grade, function, finish, size, and other distinctive qualities of each type of door hardware are indicated in Part 3 "Door Hardware Schedule" Article. Products are identified by using door hardware designations, as follows:

1. Named Manufacturers' Products: Manufacturer and product designation are listed for each door hardware type required for the purpose of establishing minimum requirements. Manufacturers' names are abbreviated in Part 3 "Door Hardware Schedule" Article.

2.4 HINGES

A. Hinges: BHMA A156.1. Provide template-produced hinges for hinges installed on hollow-metal doors and hollow-metal frames.

1. Basis-of-Design:

a. Stanley Commercial Hardware, a division of Dormakaba; **CB179**

2. Manufacturers: Subject to compliance with requirements, available manufacturers offering products that may be incorporated into the Work include, but are not limited to, the following:

a. Hager Companies
b. McKinney Products Company; an ASSA ABLOY Group company
c. Substitutions: Under provisions of Section 012500 “Substitution Procedures”.

2.5 SELF-CLOSING HINGES AND PIVOTS

A. Self-Closing Hinges and Pivots: BHMA A156.17.

1. Basis-of-Design:

a. McKinney Products Company; an ASSA ABLOY Group company; **1001**

2. Manufacturers: Subject to compliance with requirements, available manufacturers offering products that may be incorporated into the Work include, but are not limited to, the following:

a. Hager Companies
b. PBB, Inc.

c. Substitutions: Under provisions of Section 012500 “Substitution Procedures”.

B. Spring Hinges: Grade 1; wrought steel, with torsion spring.

1. Type: Double acting.

2.6 CONTINUOUS HINGES

A. Continuous Hinges: BHMA A156.26; minimum 0.120-inch-thick, hinge leaves with minimum overall width of 4 inches; fabricated to full height of door and frame and to template screw locations; with components finished after milling and drilling are complete.

B. Continuous, Gear-Type Hinges: Extruded-aluminum, pinless, geared hinge leaves joined by a continuous extruded-aluminum channel cap; with concealed, self-lubricating thrust bearings.

1. Basis-of-Design:

a. Markar Architectural Products, Inc.; a subsidiary of Adams Rite Manufacturing Co.

2. Manufacturers: Subject to compliance with requirements, available manufacturers offering products that may be incorporated into the Work include, but are not limited to, the following:

a. Hager Companies
b. McKinney Products Company; an ASSA ABLOY Group company
c. Substitutions: Under provisions of Section 012500 “Substitution Procedures”.

2.7 MECHANICAL LOCKS AND LATCHES

A. Lock Functions: As indicated in Part 3 “Door Hardware Schedule”.

B. Lock Throw: Comply with testing requirements for length of bolts required for labeled fire doors, and as follows:

1. Bored Locks: Minimum ½-inch latchbolt throw.

C. Lock Backset: 2¾ inches, unless otherwise indicated.

D. Lock Trim:

1. Levers: Cast.

a. Construction: Freewheeling vandal resistant.

2. Escutcheons (Roses): Wrought.
3. Dummy Trim: Match lever lock trim and escutcheons.

E. Strikes: Provide manufacturer's standard strike for each lock bolt or latchbolt complying with requirements indicated for applicable lock or latch and with strike box and curved lip extended to protect frame; finished to match lock or latch.

1. Flat-Lip Strikes: For locks with three-piece antifriction latchbolts, as recommended by manufacturer.
2. Aluminum-Frame Strike Box: Manufacturer's special strike box fabricated for aluminum framing.

F. Bored Locks: BHMA A156.2; Grade 1; Series 4000.

1. Basis-of-Design:

a. Schlage Commercial Lock Division; an Allegion company; **ND Series – Sparta, Vandlgard** functions

2. Manufacturers: Subject to compliance with requirements, available manufacturers offering products that may be incorporated into the Work include, but are not limited to, the following:

a. Dormakaba Group
b. SARGENT Manufacturing Company; an ASSA ABLOY Group company
c. Substitutions: Under provisions of Section 012500 "Substitution Procedures".

2.8 MANUAL FLUSH BOLTS

A. Manual Flush Bolts: BHMA A156.16; minimum ¾-inch throw.

1. Basis-of-Design Product:

a. Door Controls International, Inc.; **780F** and **790F**, designed for mortising into door edge

2. Manufacturers: Subject to compliance with requirements, available manufacturers offering products that may be incorporated into the Work include, but are not limited to, the following:

a. IVES Hardware; an Allegion company
b. Rockwood Manufacturing Company, an ASSA ABLOY Group company
c. Substitutions: Under provisions of Section 012500 "Substitution Procedures".

B. Dustproof Strikes: Grade 1, polished wrought brass, with ¾-inch-diameter, spring-tension plunger.

2.9 AUTOMATIC AND SELF-LATCHING FLUSH BOLTS

A. Automatic and Self-Latching Flush Bolts: BHMA A156.16; minimum ¾-inch throw; designed for mortising into door edge.

1. Basis-of-Design Product:

a. Door Controls International, Inc.; **862/962**

2. Manufacturers: Subject to compliance with requirements, available manufacturers offering products that may be incorporated into the Work include, but are not limited to, the following:

a. IVES Hardware; an Allegion company
b. Rockwood Manufacturing Company, an ASSA ABLOY Group company
c. Substitutions: Under provisions of Section 012500 "Substitution Procedures".

2.10 EXIT DEVICES AND AUXILIARY ITEMS

A. Exit Devices and Auxiliary Items: BHMA A156.3.

1. Basis-of-Design Product:

a. Von Duprin; an Allegion company; **Series 99L** and **9927L**, **17** trim

2. Manufacturers: Subject to compliance with requirements, available manufacturers offering products that may be incorporated into the Work include, but are not limited to, the following:

a. Dormakaba Group
b. SARGENT Manufacturing Company; an ASSA ABLOY Group company
c. Substitutions: Under provisions of Section 012500 "Substitution Procedures".

B. Coordinate exit device operation with cylinder locks where specified.

C. Interior panic hardware shall be cut ½ width of door from latch side only.

D. All exit devices shall be provided with cylinder dogging hardware for manual keying.

E. At paired exit device doors, provide keyed removable mullions similar to Von Duprin steel mullion, **Model #9954**.

F. Provide electric latch retraction (**-EL**), power supply (**PS873**) and electric power transfer (**EPT-2**) where required for electrified exit devices.

2.11 LOCK CYLINDERS

A. Lock Cylinders: Tumbler type, constructed from brass or bronze, stainless-steel, or nickel silver.

1. Manufacturer: Same manufacturer as for locking devices.

B. Standard Lock Cylinders: BHMA A156.5; Grade 1; permanent cores that are removable; face finished to match lockset.

2.12 KEYING

A. Keying System: Factory registered, complying with guidelines in BHMA A156.28, appendix. Incorporate decisions made in keying conference.

1. Great-Grand Master Key System: Change keys, a master key, a grand master key, and a great-grand master key operate cylinders.

B. Keys: Brass.

1. Quantity: In addition to one (1) extra key blank for each lock, provide the following:

a. Great-Grand Master Keys: Five (5).

2.13 OPERATING TRIM

A. Operating Trim: BHMA A156.6; brass or bronze, unless otherwise indicated.

1. Basis-of-Design Product:

a. Rockwood Manufacturing Company, an ASSA ABLOY Group company

1) Pulls:

a) Exterior: **RM2210 x 48**
b) Interior: **BF110C8**

2) Push Plates: **70RCC 4x16**

2. Manufacturers: Subject to compliance with requirements, available manufacturers offering products that may be incorporated into the Work include, but are not limited to, the following:

a. Burns Manufacturing Incorporated
b. IVES Hardware; an Allegion company
c. Substitutions: Under provisions of Section 012500 “Substitution Procedures”.

2.14 ACCESSORIES FOR PAIRS OF DOORS

A. Coordinators: BHMA A156.3; consisting of active-leaf, hold-open lever, and inactive-leaf release trigger; fabricated from steel with nylon-coated strike plates; with built-in, adjustable safety release; and with internal override.

2.15 SURFACE CLOSERS

A. Surface Closers: BHMA A156.4; rack-and-pinion hydraulic type with adjustable sweep and latch speeds controlled by key-operated valves and forged-steel main arm. Comply with manufacturer's written recommendations for size of door closers depending on size of door, exposure to weather, and anticipated frequency of use. Provide factory-sized closers, adjustable to meet field conditions and requirements for opening force.

1. Basis-of-Design Product:

a. LCN; an Allegion company; **4040XP Series**

2. Manufacturers: Subject to compliance with requirements, available manufacturers offering products that may be incorporated into the Work include, but are not limited to, the following:

a. Dormakaba Group
b. SARGENT Manufacturing Company; an ASSA ABLOY Group company
c. Substitutions: Under provisions of Section 012500 “Substitution Procedures”.

B. Door closers to have delayed action cylinder, sized to the door leaf size.

1. Marked closer/stop, shall be **Cush** series.
2. Marked closer/stop/hold, shall be **HCush** series.

C. Door closers are to be mounted on the least conspicuous side of the door. The hardware supplier shall consult with the Architect to verify applications and note mounting locations on the hardware schedule.

2.16 POWER OPERATOR

A. Active Leaf: Automatic swing door operator. Provide with two (2) wall mounted 6-inch diameter "Push to Open" paddles and switches, mounted as required by the ADA. Coordinate installation with electrical work.

1. Basis-of-Design Product:

a. NABCO Entrances Inc., **Model GT710**

2. Manufacturers: Subject to compliance with requirements, available manufacturers offering products that may be incorporated into the Work include, but are not limited to, the following:

a. Dormakaba Group
b. Norton Door Controls, an ASSA ABLOY Group
c. Substitutions: Under provisions of Section 012500 “Substitution Procedures”.

2.17 MECHANICAL STOPS AND HOLDERS

A. Wall- and Floor-Mounted Stops: BHMA A156.16; polished cast brass, bronze, or aluminum base metal.

1. Basis-of-Design Product:

a. IVES Hardware; an Allegion company; **407** and **436** or **438**

1) Provide wall bumpers wherever possible. Provide floor stops where the use of wall bumpers is not feasible, provided the location of the stop is not a stumbling hazard or would cause the door to rack at the hinges.

2. Manufacturers: Subject to compliance with requirements, available manufacturers offering products that may be incorporated into the Work include, but are not limited to, the following:

a. Door Controls International, Inc.
b. Rockwood Manufacturing Company, an ASSA ABLOY Group company
c. Substitutions: In accordance with Section 012500 “Substitution Procedures”.

2.18 OVERHEAD STOPS AND HOLDERS

A. Overhead Stops and Holders: BHMA A156.8.

1. Basis-of-Design Product:

a. Glynn-Johnson; an Allegion company; **90S**

2. Manufacturers: Subject to compliance with requirements, available manufacturers offering products that may be incorporated into the Work include, but are not limited to, the following:

a. Architectural Builders Hardware Mfg., Inc.
b. Rockwood Manufacturing Company, an ASSA ABLOY Group company
c. Substitutions: In accordance with Section 012500 "Substitution Procedures".

2.19 SMOKE SEALS

A. Smoke Labeled Gasketing: Assemblies complying with NFPA 105 that are listed and labeled by a testing and inspecting agency acceptable to authorities having jurisdiction, for smoke ratings indicated, based on testing according to UL 1784.

1. Basis-of-Design Products:

a. Pemko Manufacturing Co.; an ASSA ABLOY Group company

1) Smoke Rated Doors:

a) Head and Jamb: **S88C**, compression bulb
b) Meeting Stiles: **S772D**
c) Sill: **411APKL**, automatic door bottom

2. Manufacturers: Subject to compliance with requirements, available manufacturers offering products that may be incorporated into the Work include, but are not limited to, the following:

a. Reese Enterprises, Inc.
b. Zero International, an Allegion company
c. Substitutions: In accordance with Section 012500 "Substitution Procedures".

2.20 WEATHERSTRIPPING

A. Door Gasketing: BHMA A156.22; air leakage not to exceed 0.50 cfm per foot of crack length for gasketing other than for smoke control, as tested according to ASTM E 283; with resilient or flexible seal strips that are easily replaceable and readily available from stocks maintained by manufacturer.

1. Basis-of-Design Product:

a. Pemko Manufacturing Co.; an ASSA ABLOY Group company

2. Manufacturers: Subject to compliance with requirements, available manufacturers offering products that may be incorporated into the Work include, but are not limited to, the following:

a. National Guard Products
b. Zero International, an Allegion company
c. Substitutions: In accordance with Section 012500 "Substitution Procedures".

B. Adhesive-Backed Perimeter Gasketing: Silicone bulb gasket material applied to frame rabbet with self-adhesive.

1. Basis-of-Design Product: **S88C**

C. Door Sweeps: Nylon brush gasket material held in place by flat housing or flange; surface mounted to bottom of door with screws.

1. Housing or Flange Material: Aluminum.
2. Basis-of-Design Product: **90041CSB**

2.21 THRESHOLDS

A. Thresholds: BHMA A156.21; fabricated to full width of opening indicated.

1. Basis-of-Design Product:

a. Pemko Manufacturing Co.; an ASSA ABLOY Group company; **2005AT**

1) Similar to this style but size will vary.

2. Manufacturers: Subject to compliance with requirements, available manufacturers offering products that may be incorporated into the Work include, but are not limited to, the following:

a. National Guard Products
b. Zero International, an Allegion company
c. Substitutions: In accordance with Section 012500 “Substitution Procedures”.

2.22 METAL PROTECTIVE TRIM UNITS

A. Metal Protective Trim Units: BHMA A156.6; fabricated from 0.050-inch-thick stainless-steel; with manufacturer's standard machine or self-tapping screw fasteners.

1. Basis-of-Design Product:

a. Burns Manufacturing Incorporated

2. Manufacturers: Subject to compliance with requirements, available manufacturers offering products that may be incorporated into the Work include, but are not limited to, the following:

a. IVES Hardware; an Allegion company
b. Rockwood Manufacturing Company, an ASSA ABLOY Group company
c. Substitutions: In accordance with Section 012500 “Substitution Procedures”.

B. All plates are 2 inches less width of door on single doors, 1-inch less width of door on pairs.

1. Kick Plates: 16 inches high.
2. Armor Plates: 32 inches high.

2.23 AUXILIARY DOOR HARDWARE

A. Auxiliary Hardware: BHMA A156.16.

1. Manufacturers: Subject to compliance with requirements, available manufacturers offering products that may be incorporated into the Work include, but are not limited to, the following:

   a. Hager Companies
   b. Rockwood Manufacturing Company, an ASSA ABLOY Group company
   c. Stanley Commercial Hardware, a division of Dormakaba
   d. Substitutions: In accordance with Section 012500 “Substitution Procedures”.

2.24 AUXILIARY ELECTRIFIED DOOR HARDWARE

A. Auxiliary Electrified Door Hardware:

1. Manufacturers: Subject to compliance with requirements, available manufacturers offering products that may be incorporated into the Work include, but are not limited to, the following:

   a. GE Security, Inc.
   b. SARGENT Manufacturing Company; an ASSA ABLOY Group company
   c. Schlage Commercial Lock Division; an Allegion company
   d. Security Door Controls
   e. Substitutions: In accordance with Section 012500 “Substitution Procedures”.

2.25 FABRICATION

A. Base Metals: Produce door hardware units of base metal indicated, fabricated by forming method indicated, using manufacturer's standard metal alloy, composition, temper, and hardness. Furnish metals of a quality equal to or greater than that of specified door hardware units and BHMA A156.18.

B. Fasteners: Provide door hardware manufactured to comply with published templates prepared for machine, wood, and sheet metal screws. Provide screws that comply with commercially recognized industry standards for application intended, except aluminum fasteners are not permitted. Provide Phillips flat-head screws with finished heads to match surface of door hardware, unless otherwise indicated.

1. Concealed Fasteners: For door hardware units that are exposed when door is closed, except for units already specified with concealed fasteners. Do not use through bolts for installation where bolt head or nut on opposite face is exposed unless it is the only means of securely attaching the door hardware. Where through bolts are used on hollow door and frame construction, provide sleeves for each through bolt.
2. Spacers or Sex Bolts: For through bolting of hollow-metal doors.

   a. All closers to be installed using through bolting.

3. Gasketing Fasteners: Provide noncorrosive fasteners for exterior applications and elsewhere as indicated.

2.26 FINISHES

A. Provide finishes complying with BHMA A156.18. Unless otherwise specified in the hardware sets or specification, materials and finishes for the buildings shall be as follows:

1. BHMA 626 or 630 as a minimum.

B. Protect mechanical finishes on exposed surfaces from damage by applying a strippable, temporary protective covering before shipping.

C. Appearance of Finished Work: Variations in appearance of abutting or adjacent pieces are acceptable if they are within one-half of the range of approved Samples. Noticeable variations in the same piece are not acceptable. Variations in appearance of other components are acceptable if they are within the range of approved Samples and are assembled or installed to minimize contrast.

PART 3 - EXECUTION

3.1 EXAMINATION

A. Examine doors and frames, with Installer present, for compliance with requirements for installation tolerances, labeled fire-rated door assembly construction, wall and floor construction, and other conditions affecting performance.

B. Examine roughing-in for electrical power systems to verify actual locations of wiring connections before electrified door hardware installation.

C. Proceed with installation only after unsatisfactory conditions have been corrected.

3.2 PREPARATION

A. Steel Doors and Frames: For surface-applied door hardware, drill and tap doors and frames according to ANSI/SDI A250.6.

B. Wood Doors: Comply with door and hardware manufacturers' written instructions.

C. Aluminum Entrances: Comply with entrance and hardware manufacturer’s written instructions.

3.3 INSTALLATION

A. Mounting Heights: Mount door hardware units at heights to comply with the following unless otherwise indicated or required to comply with governing regulations.

1. Standard Steel Doors and Frames: ANSI/SDI A250.8.
2. Wood Doors: DHI's "Recommended Locations for Architectural Hardware for Wood Flush Doors."

B. Install each door hardware item to comply with manufacturer's written instructions. Where cutting and fitting are required to install door hardware onto or into surfaces that are later to be painted or finished in another way, coordinate removal, storage, and reinstallation of surface

protective trim units with finishing work. Do not install surface-mounted items until finishes have been completed on substrates involved.

1. Set units level, plumb, and true to line and location. Adjust and reinforce attachment substrates as necessary for proper installation and operation.
2. Drill and countersink units that are not factory prepared for anchorage fasteners. Space fasteners and anchors according to industry standards.

C. Hinges: Install types and in quantities indicated in door hardware schedule but not fewer than the number recommended by manufacturer for application indicated or one (1) hinge for every 30 inches of door height, whichever is more stringent, unless other equivalent means of support for door, such as spring hinges or pivots, are provided.

D. Lock Cylinders: Install construction cores to secure building and areas during construction period.

1. Replace construction cores with removable cores as indicated in keying schedule.

E. Boxed Power Supplies: Locate power supplies as indicated or, if not indicated, above accessible ceilings. Verify location with Architect.

1. Configuration: Provide least number of power supplies required to adequately serve doors with electrified door hardware.

F. Thresholds: Set thresholds for exterior doors and other doors indicated in full bed of sealant complying with requirements specified in Section 079200 "Joint Sealants."

G. Stops: Provide wall or floor stops for doors unless other type stops are indicated in door hardware schedule. Do not mount floor stops where they will impede traffic.

H. Perimeter Gasketing: Apply to head and jamb, forming seal between door and frame.

1. Do not notch perimeter gasketing to install other surface-applied hardware.

I. Door Bottoms: Apply to bottom of door, forming seal with threshold when door is closed.

3.4 ADJUSTING

A. Initial Adjustment: Adjust and check each operating item of door hardware and each door to ensure proper operation or function of every unit. Replace units that cannot be adjusted to operate as intended. Adjust door control devices to compensate for final operation of heating and ventilating equipment and to comply with referenced accessibility requirements.

1. Door Closers: Adjust sweep period to comply with accessibility requirements and requirements of authorities having jurisdiction.

3.5 CLEANING AND PROTECTION

A. Clean adjacent surfaces soiled by door hardware installation.

B. Clean operating items as necessary to restore proper function and finish.

C. Provide final protection and maintain conditions that ensure that door hardware is without damage or deterioration at time of Substantial Completion.

3.6 MAINTENANCE SERVICE

A. Maintenance Tools and Instructions: Furnish a complete set of specialized tools and maintenance instructions for Owner's continued adjustment, maintenance, and removal and replacement of door hardware.

B. Maintenance Service: Beginning at Substantial Completion, provide 6 months' full maintenance by skilled employees of door hardware Installer. Include quarterly preventive maintenance, repair or replacement of worn or defective components, lubrication, cleaning, and adjusting as required for proper door and door hardware operation. Provide parts and supplies that are the same as those used in the manufacture and installation of original products.

3.7 DOOR HARDWARE SCHEDULE

A. Provide hardware as specified in the previous articles in sets according to the following schedule and as indicated in the Door Schedule on the Drawings.

B. The hardware supplier shall meet with the Architect and/or Owner to determine lock functions and keying requirements.

HW-1

EACH TO HAVE:

	CONTINUOUS HINGES
1	ELEC. EXIT DEVICE (CLASSRM)
1	EXIT DEVICE (EXIT ONLY)
1	REMOVABLE MULLION
2	PULLS
1	POWER OPERATOR
1	CLOSER
1	OH STOP
1	THRESHOLD
	WEATHERSTRIPPING

DOOR: 101A, 129A

HW-2

EACH TO HAVE:

	CONTINUOUS HINGES
1	ELEC. EXIT DEVICE (PASSAGE)
1	EXIT DEVICE (PASSAGE)
1	REMOVABLE MULLION
2	PULLS
1	POWER OPERATOR
1	CLOSER/STOP
	WEATHERSTRIPPING

DOOR: 102A, 130B

HW-3

EACH TO HAVE:

	BUTTS
1	CLASSROOM LOCKSET
1	STOP
1	KICK PLATE
	SILENCERS

DOOR: 104A, 113A, 116A, 117A, 138A, 141A

HW-4

EACH TO HAVE:

	BUTTS
1	STOREROOM LOCKSET
1	CLOSER/STOP
1	ARMOR PLAT
	SILENCERS

DOOR: 105A, 132A

HW-5

EACH TO HAVE:

	BUTTS
1	CLASSROOM LOCKSET
1	CLOSER/STOP/HOLD
1	STOP
1	KICK PLATE
	SILENCERS

DOOR: 107A, 108A

HW-6

EACH TO HAVE:

	CONTINUOUS HINGES
1	EXIT DEVICE (EXIT ONLY)
1	CLOSER
1	OH STOP
1	THRESHOLD
	WEATHERSTRIPPING

DOOR: 107B, 108B

HW-7

EACH TO HAVE:

	BUTTS
1	CLASSROOM LOCKSET
1	STOP
1	KICK PLATE
	SILENCERS

DOOR: 118A

HW-8

EACH TO HAVE:

	BUTTS
1	PRIVACY LOCKSET
1	STOP
1	KICK PLATE
	SILENCERS

DOOR: 110A, 111A, 112A, 131A, 133A

HW-9

EACH TO HAVE:

	BUTTS
1	CLASSROOM LOCKSET
	AUTOMATIC FLUSH BOLTS
1	COORDINATOR
2	CLOSER/STOPS
2	KICK PLATES
	SMOKE SEALS

DOOR: 109A, 128A

HW-10

EACH TO HAVE:

	BUTTS
1	STOREROOM LOCKSET
1	CLOSER
1	STOP
1	KICK PLATE
	SILENCERS

DOOR: 119A, 122A

HW-11

EACH TO HAVE:

	BUTTS
1	CLASSROOM LOCKSET
	FLUSH BOLTS
1	STOP
1	OH STOP
2	KICK PLATES
	SILENCERS

DOOR: 106A

HW-12

EACH TO HAVE:

	CONTINUOUS HINGES
1	STOREROOM LOCKSET
1	CLOSER
1	OH STOP
1	KICK PLATE
1	THRESHOLD
	WEATHERSTRIPPING

DOOR: 122B

HW-13

EACH TO HAVE:

	BUTTS
1	PUSH/PULL
1	CLOSER
1	STOP
1	KICK PLATE
	SILENCERS

DOOR: 120A, 121A

HW-14

EACH TO HAVE:

	BUTTS
1	PASSAGE LOCKSET
1	CLOSER
1	STOP
1	KICK PLATE
	SILENCERS

DOOR: 123A

HW-15

EACH TO HAVE:

	BUTTS
1	CLASSROOM LOCKSET
1	CLOSER/STOP
1	KICK PLATE
	SMOKE SEALS

DOOR: 124A

HW-16

EACH TO HAVE:

	BUTTS
1	CLASSROOM LOCKSET
1	CLOSER/STOP
1	KICK PLATE
	SILENCERS

DOOR: 125A, 137A

HW-17

EACH TO HAVE:

	CONTINUOUS HINGES
1	CLASSROOM LOCKSET
	FLUSH BOLTS
2	CLOSERS
2	OH STOPS
1	COORDINATOR
2	KICK PLATES
1	THRESHOLD
	WEATHERSTRIPPING

DOOR: 125B

HW-18

EACH TO HAVE:

	CONTINUOUS HINGES
1	EXIT DEVICE (CLASSROOM)
1	EXIT DEVICE (EXIT ONLY)
1	REMOVABLE MULLION
2	PULLS
2	CLOSERS
2	OH STOPS
1	THRESHOLD
	WEATHERSTRIPPING

DOOR: 129B

HW-19

EACH TO HAVE:

	CONTINUOUS HINGES
1	EXIT DEVICE (CLASSROOM)
1	EXIT DEVICE (EXIT ONLY)
1	REMOVABLE MULLION
2	CLOSER/STOP/HOLDS
2	KICK PLATES
	SILENCERS

DOOR: 126A, 127A

HW-20

EACH TO HAVE:

	CONTINUOUS HINGES
2	EXIT DEVICES (PASSAGE)
1	REMOVABLE MULLION
2	PULLS
1	CLOSER/STOPS
	WEATHERSTRIPPING

DOOR: 130C

HW-21

EACH TO HAVE:

	CONTINUOUS HINGES
1	VR EXIT DEVICE (CLASSROOM)
1	VR EXIT DEVICE (EXIT ONLY)
2	CLOSER/STOP/HOLDS
2	KICK PLATES
	SILENCERS

DOOR: 130A

HW-22

EACH TO HAVE:

	CONTINUOUS HINGES
1	STOREROOM LOCKSET
	FLUSH BOLTS
2	OH STOPS
2	KICK PLATES
	SILENCERS

DOOR: A02B

HW-23

EACH TO HAVE:

	CONTINUOUS HINGES
1	EXIT DEVICE (CLASSROOM)
1	EXIT DEVICE (EXIT ONLY)
1	REMOVABLE MULLION
2	CLOSERS
2	OH STOPS
1	THRESHOLD
	WEATHERSTRIPPING

DOOR: 126C, 127B

HW-24

EACH TO HAVE:

	BUTTS
1	OFFICE LOCKSET
1	STOP
1	KICK PLATE
	SILENCERS

DOOR: 134A, 135A, 136A

HW-25

EACH TO HAVE:

	BUTTS
1	CLASSROOM LOCKSET
1	CLOSER/STOP
	SILENCERS

DOOR: 114A

HW-26

EACH TO HAVE:

	SPRING HINGES – DOUBLE-ACTING
2	PUSH PLATES
1	STOP
2	KICK PLATES

DOOR: 126B

END OF SECTION 087100

SECTION 088000 - GLAZING

PART 1 - GENERAL

1.1 RELATED DOCUMENTS

A. Drawings and general provisions of the Contract, including General and Supplementary Conditions and Division 01 Specification Sections, apply to this Section.

1.2 SUMMARY

A. Section includes:

1. Glass for doors, entrances, windows, interior casework, storefront framing, and glazed curtain walls.
2. Glazing sealants and accessories.

1.3 DEFINITIONS

A. Glass Manufacturers: Firms that produce primary glass, fabricated glass, or both, as defined in referenced glazing publications.

B. Glass Thicknesses: Indicated by thickness designations according to ASTM C 1036.

C. IBC: International Building Code.

D. Interspace: Space between lites of an insulating-glass unit.

1.4 COORDINATION

A. Coordinate glazing channel dimensions to provide necessary bite on glass, minimum edge and face clearances, and adequate sealant thicknesses, with reasonable tolerances.

1.5 ACTION SUBMITTALS

A. Product Data: For each type of product.

B. Glass Samples: For each type of glass product other than clear monolithic vision glass; 12 inches square.

C. Glazing Accessory Samples: For gaskets and sealants, in 12-inch lengths. Install sealant Samples between two (2) strips of material representative in color of the adjoining framing system.

D. Glazing Schedule: List glass types and thicknesses for each size opening and location. Use same designations indicated on Drawings.

1.6 INFORMATIONAL SUBMITTALS

A. Qualification Data: For installers, glass testing agency and sealant testing agency.

B. Product Test Reports: For tinted glass, coated glass, insulating glass, glazing sealants, and glazing gaskets.

1. For glazing sealants, provide test reports based on testing current sealant formulations within previous 36-month period.

C. Preconstruction adhesion and compatibility test report.

D. Sample Warranties: For special warranties.

1.7 QUALITY ASSURANCE

A. Installer Qualifications: A qualified installer who employs glass installers for this Project who are certified under the National Glass Association's Certified Glass Installer Program.

B. Glass Testing Agency Qualifications: A qualified independent testing agency accredited according to the NFRC CAP 1 Certification Agency Program.

C. Sealant Testing Agency Qualifications: An independent testing agency qualified according to ASTM C 1021 to conduct the testing indicated.

1.8 PRECONSTRUCTION TESTING

A. Preconstruction Adhesion and Compatibility Testing: Test each glass product, tape sealant, gasket, glazing accessory, and glass-framing member for adhesion to and compatibility with elastomeric glazing sealants.

1. Testing is not required if data are submitted based on previous testing of current sealant products and glazing materials matching those submitted.
2. Use ASTM C 1087 to determine whether priming and other specific joint-preparation techniques are required to obtain rapid, optimum adhesion of glazing sealants to glass, tape sealants, gaskets, and glazing channel substrates.
3. Test no fewer than eight (8) Samples of each type of material, including joint substrates, shims, sealant backings, secondary seals, and miscellaneous materials.
4. Schedule sufficient time for testing and analyzing results to prevent delaying the Work.
5. For materials failing tests, submit sealant manufacturer's written instructions for corrective measures including the use of specially formulated primers.

1.9 DELIVERY, STORAGE, AND HANDLING

A. Protect glazing materials according to manufacturer's written instructions. Prevent damage to glass and glazing materials from condensation, temperature changes, direct exposure to sun, or other causes.

B. Comply with insulating-glass manufacturer's written recommendations for venting and sealing units to avoid hermetic seal ruptures due to altitude change.

1.10 FIELD CONDITIONS

A. Environmental Limitations: Do not proceed with glazing when ambient and substrate temperature conditions are outside limits permitted by glazing material manufacturers and when glazing channel substrates are wet from rain, frost, condensation, or other causes.

1. Do not install glazing sealants when ambient and substrate temperature conditions are outside limits permitted by sealant manufacturer or below 40 deg F (4.4 deg C).

1.11 WARRANTY

A. Manufacturer's Special Warranty for Coated-Glass Products: Manufacturer agrees to replace coated-glass units that deteriorate within specified warranty period. Deterioration of coated glass is defined as defects developed from normal use that are not attributed to glass breakage or to maintaining and cleaning coated glass contrary to manufacturer's written instructions. Defects include peeling, cracking, and other indications of deterioration in coating.

1. Warranty Period: Ten (10) years from date of Substantial Completion.

B. Manufacturer's Special Warranty on Laminated Glass: Manufacturer agrees to replace laminated-glass units that deteriorate within specified warranty period. Deterioration of laminated glass is defined as defects developed from normal use that are not attributed to glass breakage or to maintaining and cleaning laminated glass contrary to manufacturer's written instructions. Defects include edge separation, delamination materially obstructing vision through glass, and blemishes exceeding those allowed by referenced laminated-glass standard.

1. Warranty Period: Ten (10) years from date of Substantial Completion.

C. Manufacturer's Special Warranty on Insulating Glass: Manufacturer agrees to replace insulating-glass units that deteriorate within specified warranty period. Deterioration of insulating glass is defined as failure of hermetic seal under normal use that is not attributed to glass breakage or to maintaining and cleaning insulating glass contrary to manufacturer's written instructions. Evidence of failure is the obstruction of vision by dust, moisture, or film on interior surfaces of glass.

1. Warranty Period: Ten (10) years from date of Substantial Completion.

PART 2 - PRODUCTS

2.1 MANUFACTURERS

A. Manufacturers: Subject to compliance with requirements, available manufacturers offering products that may be incorporated into the Work include, but are not limited to, the following:

1. Cardinal Glass Industries
2. DuPont™ Building Innovations
3. Oldcastle BuildingEnvelope
4. PPG Industries, Inc.
5. Viracon, Inc.
6. Substitutions: Under provisions of Section 012500 “Substitution Procedures”.

B. Source Limitations for Glass: Obtain from single source from single manufacturer for each glass type.

1. Obtain tinted glass from single source from single manufacturer.

C. Source Limitations for Glazing Accessories: Obtain from single source from single manufacturer for each product and installation method.

2.2 PERFORMANCE REQUIREMENTS

A. General: Installed glazing systems shall withstand normal thermal movement and wind and impact loads (where applicable) without failure, including loss or glass breakage attributable to the following: defective manufacture, fabrication, or installation; failure of sealants or gaskets to remain watertight and airtight; deterioration of glazing materials; or other defects in construction.

B. Structural Performance: Glazing shall withstand the following design loads within limits and under conditions indicated determined according to the IBC and ASTM E 1300.

1. Design Wind Pressures: As indicated on Drawings, required by Building Code, or per authorities having jurisdiction.
2. Maximum Lateral Deflection: For glass supported on all four (4) edges, limit center-of-glass deflection at design wind pressure to not more than 1/50 times the short-side length or 1-inch, whichever is less.
3. Differential Shading: Design glass to resist thermal stresses induced by differential shading within individual glass lites.

C. Safety Glazing: Where safety glazing is indicated, provide glazing that complies with 16 CFR 1201, Category II.

D. Thermal and Optical Performance Properties: Provide glass with performance properties specified, as indicated in manufacturer's published test data, based on procedures indicated below:

1. For monolithic-glass lites, properties are based on units with lites of thickness indicated.
2. For laminated-glass lites, properties are based on products of construction indicated.
3. For insulating-glass units, properties are based on units of thickness indicated for overall unit and for each lite.
4. U-Factors: Center-of-glazing values, according to NFRC 100 and based on LBL's WINDOW 5.2 computer program, expressed as Btu/sq. ft. x h x deg F.
5. Solar Heat-Gain Coefficient and Visible Transmittance: Center-of-glazing values, according to NFRC 200 and based on LBL's WINDOW 5.2 computer program.
6. Visible Reflectance: Center-of-glazing values, according to NFRC 300.

2.3 GLASS PRODUCTS, GENERAL

A. Glazing Publications: Comply with published recommendations of glass product manufacturers and organizations below unless more stringent requirements are indicated. Refer to these publications for glazing terms not otherwise defined in this Section or in referenced standards.

1. GANA Publications: GANA's "Laminated Glazing Reference Manual" and GANA's "Glazing Manual."
2. IGMA Publication for Insulating Glass: SIGMA TM-3000, "North American Glazing Guidelines for Sealed Insulating Glass Units for Commercial and Residential Use."

B. Safety Glazing Labeling: Where safety glazing is indicated, permanently mark glazing with certification label of the SGCC or another certification agency acceptable to authorities having jurisdiction. Label shall indicate manufacturer's name, type of glass, thickness, and safety glazing standard with which glass complies.

C. Insulating-Glass Certification Program: Permanently marked either on spacers or on at least one (1) component lite of units with appropriate certification label of IGCC.

D. Thickness: Where glass thickness is indicated, it is a minimum. Provide glass that complies with performance requirements and is not less than the thickness indicated.

E. Strength: Where float glass is indicated, provide annealed float glass, Kind HS heat-treated float glass, or Kind FT heat-treated float glass. Where heat-strengthened glass is indicated, provide Kind HS heat-treated float glass or Kind FT heat-treated float glass. Where fully tempered glass is indicated, provide Kind FT heat-treated float glass.

2.4 GLASS PRODUCTS

A. Clear Annealed Float Glass: ASTM C 1036, Type I, Class 1 (clear), Quality-Q3.

B. Tinted Annealed Float Glass: ASTM C 1036, Type I, Class 2 (tinted), Quality-Q3.

1. Color: As selected by Architect and Owner from manufacturer's entire range.

C. Fully Tempered Float Glass: ASTM C 1048, Kind FT (fully tempered), Condition A (uncoated) unless otherwise indicated, Type I, Class 1 (clear) or Class 2 (tinted) as indicated, Quality-Q3.

1. Fabrication Process: By horizontal (roller-hearth) process with roll-wave distortion parallel to bottom edge of glass as installed unless otherwise indicated.

D. Heat-Strengthened Float Glass: ASTM C 1048, Kind HS (heat strengthened), Type I, Condition A (uncoated) unless otherwise indicated, Type I, Class 1 (clear) or Class 2 (tinted) as indicated, Quality-Q3.

1. Fabrication Process: By horizontal (roller-hearth) process with roll-wave distortion parallel to bottom edge of glass as installed unless otherwise indicated.
2. For uncoated glass, comply with requirements for Condition A.
3. For coated vision glass, comply with requirements for Condition C (other coated glass).

E. Ceramic-Coated Spandrel Glass: ASTM C 1048, Condition B, Type I, Quality-Q3.

1. Glass: Tinted float.
2. Ceramic Coating Color: As selected by Architect and Owner from manufacturer's full range.

2.5 LAMINATED GLASS

A. Laminated Glass: ASTM C 1172. Use materials that have a proven record of no tendency to bubble, discolor, or lose physical and mechanical properties after fabrication and installation.

1. Construction: Laminate glass with polyvinyl butyl interlayer to comply with interlayer manufacturer's written recommendations.
2. Interlayer Thickness: Provide thickness not less than that indicated and as needed to comply with requirements.
3. Interlayer Color: Clear unless otherwise indicated.

2.6 INSULATING GLASS

A. Insulating-Glass Units: Factory-assembled units consisting of sealed lites of glass separated by a dehydrated interspace, qualified according to ASTM E 2190.

1. Sealing System: Dual seal, with polyisobutylene and silicone primary and secondary.
2. Perimeter Spacer: Manufacturer's standard spacer material and construction.

2.7 GLAZING GASKETS

A. Dense Compression Gaskets: Molded or extruded gaskets of profile and hardness required to maintain watertight seal, made from one (1) of the following:

1. EPDM complying with ASTM C 864.
2. Silicone complying with ASTM C 1115.
3. Thermoplastic polyolefin rubber complying with ASTM C 1115.

B. Soft Compression Gaskets: Extruded or molded, closed-cell, integral-skinned EPDM, silicone or thermoplastic polyolefin rubber gaskets complying with ASTM C 509, Type II, black; of profile and hardness required to maintain watertight seal.

1. Application: Use where soft compression gaskets will be compressed by inserting dense compression gaskets on opposite side of glazing or pressure applied by means of pressure-glazing stops on opposite side of glazing.

C. Lock-Strip Gaskets: Neoprene extrusions in size and shape indicated, fabricated into frames with molded corner units and zipper lock-strips, complying with ASTM C 542, black.

2.8 GLAZING SEALANTS

A. General:

1. Compatibility: Compatible with one another and with other materials they will contact, including glass products, seals of insulating-glass units, and glazing channel substrates, under conditions of service and application, as demonstrated by sealant manufacturer based on testing and field experience.
2. Suitability: Comply with sealant and glass manufacturers' written instructions for selecting glazing sealants suitable for applications indicated and for conditions existing at time of installation.

3. Sealants used inside the weatherproofing system, shall have a VOC content of not more than 250 g/L when calculated according to 40 CFR 59, Subpart D (EPA Method 24).
4. Colors of Exposed Glazing Sealants: As selected by Architect and Owner from manufacturer's full range, to match adjacent.

B. Glazing Sealant: Neutral-curing silicone glazing sealant complying with ASTM C 920, Type S, Grade NS, Class 100/50, Use NT.

1. Products: Subject to compliance with requirements, available products that may be incorporated into the Work include, but are not limited to, the following:

a. Dow Corning Corporation; **790**
b. Pecora Corporation; **890**
c. Tremco Incorporated; **Spectrem 1**
d. Substitutions: Under provisions of Section 012500 “Substitution Procedures”.

2.9 GLAZING TAPES

A. Back-Bedding Mastic Glazing Tapes: Preformed, butyl-based, one hundred percent (100%) solids elastomeric tape; non-staining and non-migrating in contact with nonporous surfaces; with or without spacer rod as recommended in writing by tape and glass manufacturers for application indicated; and complying with ASTM C 1281 and AAMA 800 for products indicated below:

1. AAMA 806.3 tape, for glazing applications in which tape is subject to continuous pressure.

2.10 MISCELLANEOUS GLAZING MATERIALS

A. General: Provide products of material, size, and shape complying with referenced glazing standard, with requirements of manufacturers of glass and other glazing materials for application indicated, and with a proven record of compatibility with surfaces contacted in installation.

B. Cleaners, Primers, and Sealers: Types recommended by sealant or gasket manufacturer.

C. Setting Blocks: Elastomeric material with a Shore, Type A durometer hardness of 85, plus or minus 5.

D. Spacers: Elastomeric blocks or continuous extrusions of hardness required by glass manufacturer to maintain glass lites in place for installation indicated.

E. Edge Blocks: Elastomeric material of hardness needed to limit glass lateral movement (side walking).

F. Cylindrical Glazing Sealant Backing: ASTM C 1330, Type O (open-cell material), of size and density to control glazing sealant depth and otherwise produce optimum glazing sealant performance.

2.11 FABRICATION

A. Fabricate glazing units in sizes required to fit openings indicated for Project, with edge and face clearances, edge and surface conditions, and bite complying with written instructions of product manufacturer and referenced glazing publications, to comply with system performance requirements.

1. Allow for thermal movements from ambient and surface temperature changes acting on glass framing members and glazing components.

a. Temperature Change: 120 deg F (67 deg C), ambient; 180 deg F (100 deg C), material surfaces.

B. Clean-cut or flat-grind vertical edges of butt-glazed monolithic lites to produce square edges with slight chamfers at junctions of edges and faces.

C. Grind smooth and polish exposed glass edges and corners.

PART 3 - EXECUTION

3.1 EXAMINATION

A. Examine framing, glazing channels, and stops, with Installer present, for compliance with the following:

1. Manufacturing and installation tolerances, including those for size, squareness, and offsets at corners.
2. Presence and functioning of weep systems.
3. Minimum required face and edge clearances.
4. Effective sealing between joints of glass-framing members.

B. Proceed with installation only after unsatisfactory conditions have been corrected.

3.2 PREPARATION

A. Clean glazing channels and other framing members receiving glass immediately before glazing. Remove coatings not firmly bonded to substrates.

B. Examine glazing units to locate exterior and interior surfaces. Label or mark units as needed so that exterior and interior surfaces are readily identifiable. Do not use materials that leave visible marks in the completed work.

3.3 GLAZING, GENERAL

A. Comply with combined written instructions of manufacturers of glass, sealants, gaskets, and other glazing materials, unless more stringent requirements are indicated, including those in referenced glazing publications.

B. Protect glass edges from damage during handling and installation. Remove damaged glass from Project site and legally dispose of off Project site. Damaged glass includes glass with edge

damage or other imperfections that, when installed, could weaken glass, impair performance, or impair appearance.

C. Apply primers to joint surfaces where required for adhesion of sealants, as determined by preconstruction testing.

D. Install setting blocks in sill rabbets, sized and located to comply with referenced glazing publications, unless otherwise required by glass manufacturer. Set blocks in thin course of compatible sealant suitable for heel bead.

E. Do not exceed edge pressures stipulated by glass manufacturers for installing glass lites.

F. Provide spacers for glass lites where length plus width is larger than 50 inches.

1. Locate spacers directly opposite each other on both inside and outside faces of glass. Install correct size and spacing to preserve required face clearances, unless gaskets and glazing tapes are used that have demonstrated ability to maintain required face clearances and to comply with system performance requirements.
2. Provide 1/8-inch minimum bite of spacers on glass and use thickness equal to sealant width. With glazing tape, use thickness slightly less than final compressed thickness of tape.

G. Provide edge blocking where indicated or needed to prevent glass lites from moving sideways in glazing channel, as recommended in writing by glass manufacturer and according to requirements in referenced glazing publications.

H. Set glass lites in each series with uniform pattern, draw, bow, and similar characteristics.

I. Set glass lites with proper orientation so that coatings face exterior or interior as specified.

J. Where wedge-shaped gaskets are driven into one side of channel to pressurize sealant or gasket on opposite side, provide adequate anchorage so gasket cannot walk out when installation is subjected to movement.

K. Square cut wedge-shaped gaskets at corners and install gaskets in a manner recommended by gasket manufacturer to prevent corners from pulling away; seal corner joints and butt joints with sealant recommended by gasket manufacturer.

3.4 TAPE GLAZING

A. Position tapes on fixed stops so that, when compressed by glass, their exposed edges are flush with or protrude slightly above sightline of stops.

B. Install tapes continuously, but not necessarily in one (1) continuous length. Do not stretch tapes to make them fit opening.

C. Cover vertical framing joints by applying tapes to heads and sills first and then to jambs. Cover horizontal framing joints by applying tapes to jambs and then to heads and sills.

D. Place joints in tapes at corners of opening with adjoining lengths butted together, not lapped. Seal joints in tapes with compatible sealant approved by tape manufacturer.

E. Do not remove release paper from tape until right before each glazing unit is installed.

F. Apply heel bead of elastomeric sealant.

G. Center glass lites in openings on setting blocks and press firmly against tape by inserting dense compression gaskets formed and installed to lock in place against faces of removable stops. Start gasket applications at corners and work toward centers of openings.

H. Apply cap bead of elastomeric sealant over exposed edge of tape.

3.5 GASKET GLAZING (DRY)

A. Cut compression gaskets to lengths recommended by gasket manufacturer to fit openings exactly, with allowance for stretch during installation.

B. Insert soft compression gasket between glass and frame or fixed stop so it is securely in place with joints miter cut and bonded together at corners.

C. Installation with Drive-in Wedge Gaskets: Center glass lites in openings on setting blocks and press firmly against soft compression gasket by inserting dense compression gaskets formed and installed to lock in place against faces of removable stops. Start gasket applications at corners and work toward centers of openings. Compress gaskets to produce a weathertight seal without developing bending stresses in glass. Seal gasket joints with sealant recommended by gasket manufacturer.

D. Installation with Pressure-Glazing Stops: Center glass lites in openings on setting blocks and press firmly against soft compression gasket. Install dense compression gaskets and pressure-glazing stops, applying pressure uniformly to compression gaskets. Compress gaskets to produce a weathertight seal without developing bending stresses in glass. Seal gasket joints with sealant recommended by gasket manufacturer.

E. Install gaskets so they protrude past face of glazing stops.

3.6 SEALANT GLAZING (WET)

A. Install continuous spacers, or spacers combined with cylindrical sealant backing, between glass lites and glazing stops to maintain glass face clearances and to prevent sealant from extruding into glass channel and blocking weep systems until sealants cure. Secure spacers or spacers and backings in place and in position to control depth of installed sealant relative to edge clearance for optimum sealant performance.

B. Force sealants into glazing channels to eliminate voids and to ensure complete wetting or bond of sealant to glass and channel surfaces.

C. Tool exposed surfaces of sealants to provide a substantial wash away from glass.

3.7 CLEANING AND PROTECTION

A. Immediately after installation remove nonpermanent labels and clean surfaces.

B. Protect glass from contact with contaminating substances resulting from construction operations. Examine glass surfaces adjacent to or below exterior concrete and other masonry

surfaces at frequent intervals during construction, but not less than once a month, for buildup of dirt, scum, alkaline deposits, or stains.

1. If, despite such protection, contaminating substances do come into contact with glass, remove substances immediately as recommended in writing by glass manufacturer. Remove and replace glass that cannot be cleaned without damage to coatings.

C. Remove and replace glass that is damaged during construction period.

D. Wash glass on both exposed surfaces not more than four (4) days before date scheduled for inspections that establish date of Substantial Completion. Wash glass as recommended in writing by glass manufacturer.

3.8 MONOLITHIC-GLASS SCHEDULE

A. Glass Type **GL-1**: Not used.

B. Glass Type **GL-2**: Clear fully tempered float glass.

1. Thickness: ¼-inch.
2. Safety glazing required.

C. Glass Type **GL-3**: Not used.

D. Glass Type **GL-4**: Not used.

3.9 LAMINATED GLASS SCHEDULE

A. Glass Type **GL-5**: Clear laminated glass with two (2) plies of fully tempered float glass.

1. Minimum Thickness of Each Glass Ply: ¼-inch.
2. Interlayer Thickness: 0.060-inch.
3. Safety glazing required.

B. Glass Type **GL-7**: Not used.

C. Glass Type **GL-22**: Not used.

3.10 INSULATING-GLASS SCHEDULE

A. Glass Type **GL-9**: Not used.

B. Glass Type **GL-10**: Low-e-coated, clear, tempered insulating glass.

1. Overall Unit Thickness: 1-inch.
2. Thickness of Each Glass Lite: ¼-inch.
3. Outdoor Lite: Fully tempered float glass.
4. Interspace Content: Argon.
5. Indoor Lite: Fully tempered float glass.
6. Low-E Coating: Pyrolytic on second surface.
7. Provide safety glazing labeling.

C. Glass Type **GL-11**: Not used.

D. Glass Type **GL-12**: Low-e-coated, tinted insulating glass.

1. Overall Unit Thickness: 1-inch.
2. Thickness of Each Glass Lite: ¼-inch.
3. Outdoor Lite: Tinted, heat-strengthened float glass.
4. Interspace Content: Argon.
5. Indoor Lite: Clear, heat-strengthened float glass.
6. Low-E Coating: Pyrolytic on third surface.

E. Glass Type **GL-13**: Low-e-coated, tempered, tinted insulating glass.

1. Overall Unit Thickness: 1-inch.
2. Thickness of Each Glass Lite: ¼-inch.
3. Outdoor Lite: Tinted, fully tempered float glass.
4. Interspace Content: Argon.
5. Indoor Lite: Clear, fully tempered float glass.
6. Low-E Coating: Pyrolytic on third surface.
7. Safety glazing required.

F. Glass Type **GL-14**: Not used.

G. Glass Type **GL-15**: Low-e-coated, tinted, frosted insulating glass.

1. Overall Unit Thickness: 1-inch.
2. Thickness of Each Glass Lite: ¼-inch.
3. Outdoor Lite: Tinted, frosted, heat-strengthened float glass.
4. Interspace Content: Argon.
5. Indoor Lite: Clear, heat-strengthened float glass.
6. Low-E Coating: Pyrolytic on third surface.

H. Glass Type **GL-16**: Not used.

I. Glass Type **GL-18**: Not used.

J. Glass Type **GL-20**: Ceramic-coated, tinted, insulating spandrel glass.

1. Overall Unit Thickness: 1-inch.
2. Thickness of Each Glass Lite: ¼-inch.
3. Outdoor Lite: Tinted, fully tempered float glass.
4. Interspace Content: Argon.
5. Indoor Lite: Clear, float glass.
6. Coating Location: Fourth surface.

K. Glass Type **GL-25**: Not used.

L. Glass Type **GL-26**: Not used.

M. Glass Type **GL-32**: Not used.

3.11 INSULATING-LAMINATED-GLASS TYPES

A. Glass Type **GL-17**: Not used.

B. Glass Type **GL-19**: Not used.

C. Glass Type **GL-21**: Not used.

D. Glass Type **GL-23**: Not used.

E. Glass Type **GL-27**: Not used.

F. Glass Type **GL-28**: Not used.

G. Glass Type **GL-29**: Not used.

H. Glass Type **GL-30**: Not used.

I. Glass Type **GL-31**: Not used.

3.12 FIRE-RESISTANCE-RATED GLAZING TYPES

A. Glass Type **GL-6**: Not used.

B. Glass Type **GL-8**: Not used.

C. Glass Type **GL-24**: Not used.

D. Glass Type **GL-33**: Not used.

END OF SECTION 088000

SECTION 088300 - MIRRORS

PART 1 - GENERAL

1.1 RELATED DOCUMENTS

A. Drawings and general provisions of the Contract, including General and Supplementary Conditions and Division 01 Specification Sections, apply to this Section.

1.2 SUMMARY

A. Section includes the following types of silvered flat glass mirrors:

1. Tempered glass mirrors qualifying as safety glazing.

B. Related Sections:

1. Section 102800 "Toilet, Bath, and Laundry Accessories" for metal-framed mirrors.

1.3 ACTION SUBMITTALS

A. Product Data: For each type of product.

1. Mirrors. Include description of materials and process used to produce each type of silvered flat glass mirror specified that indicates sources of glass, glass coating components, edge sealer, and quality-control provisions.

B. Shop Drawings: Include mirror elevations, edge details, mirror hardware, and attachment details.

C. Samples: For each type of the following products:

1. Mirrors: 12 inches square, including edge treatment on two (2) adjoining edges.
2. Mirror Trim: 12 inches long.

1.4 INFORMATIONAL SUBMITTALS

A. Qualification Data: For Installer.

B. Sample Warranty: For special warranty.

1.5 CLOSEOUT SUBMITTALS

A. Maintenance Data: For mirrors to include in maintenance manuals.

1.6 QUALITY ASSURANCE

A. Installer Qualifications: A qualified installer who employs glass installers for this Project who are certified under the National Glass Association's Certified Glass Installer Program.

1.7 DELIVERY, STORAGE, AND HANDLING

A. Protect mirrors according to mirror manufacturer's written instructions and as needed to prevent damage to mirrors from moisture, condensation, temperature changes, direct exposure to sun, or other causes.

B. Comply with mirror manufacturer's written instructions for shipping, storing, and handling mirrors as needed to prevent deterioration of silvering, damage to edges, and abrasion of glass surfaces and applied coatings. Store indoors.

1.8 FIELD CONDITIONS

A. Environmental Limitations: Do not install mirrors until ambient temperature and humidity conditions are maintained at levels indicated for final occupancy.

1.9 WARRANTY

A. Special Warranty: Manufacturer agrees to replace mirrors that deteriorate within specified warranty period. Deterioration of mirrors is defined as defects developed from normal use that are not attributed to mirror breakage or to maintaining and cleaning mirrors contrary to manufacturer's written instructions. Defects include discoloration, black spots, and clouding of the silver film.

1. Warranty Period: One (1) year from date of manufacture.

PART 2 - PRODUCTS

2.1 MANUFACTURERS

A. Manufacturers: Subject to compliance with requirements, available manufacturers offering products that may be incorporated into the Work include, but are not limited to, the following:

1. Donisi Mirror Company
2. Gardner Glass, Inc.
3. Lenoir Mirror Company
4. Virginia Mirror Company, Inc
5. Substitutions: Under provisions of Section 012500 “Substitution Procedures”.

B. Source Limitations for Mirrors: Obtain mirrors from single source from single manufacturer.

C. Source Limitations for Mirror Accessories: Obtain mirror glazing accessories from single source.

2.2 SILVERED FLAT GLASS MIRRORS

A. Mirrors, General: ASTM C 1503.

B. Tempered Clear Glass: Mirror Glazing Quality, for blemish requirements; and comply with ASTM C 1048 for Kind FT, Condition A, tempered float glass before silver coating is applied; clear.

1. Nominal Thickness: 3/8-inch.

C. Safety Glazing Products: For tempered mirrors, provide products that comply with 16 CFR 1201, Category II.

2.3 MISCELLANEOUS MATERIALS

A. Setting Blocks: Elastomeric material with a Shore, Type A durometer hardness of 85, plus or minus 5.

B. Edge Sealer: Coating compatible with glass coating and approved by mirror manufacturer for use in protecting against silver deterioration at mirrored glass edges.

C. Mirror Mastic: An adhesive setting compound, asbestos-free, produced specifically for setting mirrors and certified by both mirror and mastic manufacturer as compatible with glass coating and substrates on which mirrors will be installed.

2.4 MIRROR HARDWARE

A. Aluminum J-Channels: Aluminum extrusions with a return deep enough to produce a glazing channel to accommodate mirrors of thickness indicated and in lengths required to cover edges of each mirror in a single piece.

1. Bottom and Side Trim: J-channels formed with front leg and back leg not less than 3/8- and 7/8-inch in height, respectively, and a thickness of not less than 0.04-inch.

a. Products: Subject to compliance with requirements, available products that may be incorporated into the Work include, but are not limited to, the following:

1) Laurence, C. R. Co., Inc.; **CRL Standard "J" Channel**
2) Sommer & Maca Industries, Inc.; **Aluminum Shallow Nose "J" Molding Lower Bar**
3) Substitutions: Under provisions of Section 012500 “Substitution Procedures”.

2. Top Trim: J-channels formed with front leg and back leg not less than 5/8- and 1-inch in height, respectively, and a thickness of not less than 0.04-inch.

a. Products: Subject to compliance with requirements, available products that may be incorporated into the Work include, but are not limited to, the following:

1) Laurence, C. R. Co., Inc.; **CRL Deep "J" Channel**
2) Sommer & Maca Industries, Inc.; **Aluminum Deep Nose "J" Molding Upper Bar**
3) Substitutions: Under provisions of Section 012500 “Substitution Procedures”.

3. Finish: Clear bright anodized.

B. Fasteners: Fabricated of same basic metal and alloy as fastened metal and matching it in finished color and texture where fasteners are exposed.

C. Anchors and Inserts: Provide devices as required for mirror hardware installation. Provide toothed or lead-shield expansion-bolt devices for drilled-in-place anchors. Provide galvanized anchors and inserts for applications on inside face of exterior walls and where indicated.

2.5 FABRICATION

A. Fabricate mirrors in the shop to greatest extent possible.

B. Fabricate cutouts for notches and holes in mirrors without marring visible surfaces. Locate and size cutouts so they fit closely around penetrations in mirrors.

PART 3 - EXECUTION

3.1 EXAMINATION

A. Examine substrates, over which mirrors are to be mounted, with Installer present, for compliance with installation tolerances, substrate preparation, and other conditions affecting performance of the Work.

B. Verify compatibility with and suitability of substrates, including compatibility of mirror mastic with existing finishes or primers.

C. Proceed with installation only after unsatisfactory conditions have been corrected and surfaces are dry.

3.2 PREPARATION

A. Comply with mastic manufacturer's written installation instructions for preparation of substrates, including coating substrates with mastic manufacturer's special bond coating where applicable.

3.3 INSTALLATION

A. General: Install mirrors to comply with mirror manufacturer's written instructions and with referenced GANA publications. Mount mirrors accurately in place in a manner that avoids distorting reflected images.

1. GANA Publications: "Glazing Manual" and "Mirrors, Handle with Extreme Care: Tips for the Professional on the Care and Handling of Mirrors."

B. Provide a minimum air space of 1/8-inch between back of mirrors and mounting surface for air circulation between back of mirrors and face of mounting surface.

C. Install mirrors with mastic and mirror hardware. Attach mirror hardware securely to mounting surfaces with mechanical fasteners installed with anchors or inserts as applicable. Install fasteners so heads do not impose point loads on backs of mirrors.

1. Aluminum J-Channels: Provide setting blocks 1/8-inch-thick by 4 inches long at quarter points. To prevent trapping water, provide, between setting blocks, two (2) slotted weeps not less than ¼-inch-wide by 3/8-inch-long at bottom channel.
2. Install mastic as follows:

a. Apply barrier coat to mirror backing where approved in writing by manufacturers of mirrors and backing material.
b. Apply mastic to comply with mastic manufacturer's written instructions for coverage and to allow air circulation between back of mirrors and face of mounting surface.
c. After mastic is applied, align mirrors and press into place while maintaining a minimum air space of 1/8-inch between back of mirrors and mounting surface.

3.4 CLEANING AND PROTECTION

A. Protect mirrors from breakage and contaminating substances resulting from construction operations.

B. Do not permit edges of mirrors to be exposed to standing water.

C. Maintain environmental conditions that prevent mirrors from being exposed to moisture from condensation or other sources for continuous periods of time.

D. Clean exposed surface of mirrors not more than four (4) days before date scheduled for inspections that establish date of Substantial Completion. Clean mirrors as recommended in writing by mirror manufacturer.

END OF SECTION 088300

SECTION 089000 - LOUVERS AND VENTS

PART 1 - GENERAL

1.1 RELATED DOCUMENTS

A. Drawings and general provisions of the Contract, including General and Supplementary Conditions and Division 01 Specification Sections, apply to this Section.

1.2 SUMMARY

A. Section Includes:

1. Fixed, extruded-aluminum louvers.
2. Blank-off panels for louvers.

B. Related Requirements:

1. Section 081113 "Hollow Metal Doors and Frames" for louvers in hollow-metal doors.
2. Section 081416 "Flush Wood Doors" for louvers in flush wood doors.

1.3 DEFINITIONS

A. Louver Terminology: Definitions of terms for metal louvers contained in AMCA 501 apply to this Section unless otherwise defined in this Section or in referenced standards.

B. Horizontal Louver: Louver with horizontal blades; i.e., the axes of the blades are horizontal.

C. Drainable-Blade Louver: Louver with blades having gutters that collect water and drain it to channels in jambs and mullions, which carry it to bottom of unit and away from opening.

1.4 ACTION SUBMITTALS

A. Product Data: For each type of product.

1. For louvers specified to bear AMCA seal, include printed catalog pages showing specified models with appropriate AMCA Certified Ratings Seals.

B. Shop Drawings: For louvers and accessories. Include plans, elevations, sections, details, and attachments to other work. Show frame profiles and blade profiles, angles, and spacing.

1. Show weep paths, gaskets, flashing, sealant, and other means of preventing water intrusion.
2. Show mullion profiles and locations.

C. Samples: For each type of metal finish required.

1.5 INFORMATIONAL SUBMITTALS

A. Sample Warranties: For manufacturer's special warranties.

1.6 QUALITY ASSURANCE

A. Welding: Qualify procedures and personnel according to the following:

1. AWS D1.2, "Structural Welding Code - Aluminum."

1.7 FIELD CONDITIONS

A. Field Measurements: Verify actual dimensions of openings by field measurements before fabrication.

1.8 WARRANTY

A. Special Finish Warranty, Factory-Applied Finishes: Standard form in which manufacturer agrees to repair finishes or replace aluminum that shows evidence of deterioration of baked enamel, powder coat, or organic finishes within specified warranty period.

1. Deterioration includes, but is not limited to, the following:

a. Color fading more than 5 Delta E units when tested in accordance with ASTM D2244.
b. Chalking in excess of a No. 8 rating when tested in accordance with ASTM D4214.
c. Cracking, checking, peeling, or failure of paint to adhere to bare metal.

2. Warranty Period: Twenty (20) years from date of Substantial Completion.

PART 2 - PRODUCTS

2.1 MANUFACTURERS

A. Source Limitations: Obtain fixed louvers and vents from single source from a single manufacturer where indicated to be of same type, design, or factory-applied color finish.

2.2 PERFORMANCE REQUIREMENTS

A. Thermal Movements: Allow for thermal movements from ambient and surface temperature changes.

1. Temperature Change (Range): 120 deg F (67 deg C), ambient; 180 deg F (100 deg C), material surfaces.

B. SMACNA Standard: Comply with recommendations in SMACNA's "Architectural Sheet Metal Manual" for fabrication, construction details, and installation procedures.

2.3 FIXED EXTRUDED-ALUMINUM LOUVERS

A. Horizontal, Drainable-Blade Louver:

1. Basis-of-Design Product:

a. Ruskin Company

2. Manufacturers: Subject to compliance with requirements, available manufacturers offering products that may be incorporated into the Work include, but are not limited to, the following:

   a. Airolite Company, LLC (The)
   b. Arrow United Industries; a division of Mestek, Inc.
   c. Greenheck Fan Corporation
   d. Substitutions: Under provisions of Section 012500 “Substitution Procedures”.

3. Louver Depth: 4 inches.
4. Frame and Blade Nominal Thickness: Not less than 0.081-inch.
5. Blade Angle: 37.5 degrees.
6. Mullion Type: Fully recessed.
7. Louver Performance Ratings: Refer to Mechanical Drawings.
8. AMCA Seal: Mark units with AMCA Certified Ratings Seal.

2.4 BLANK-OFF PANELS

A. Insulated Blank-Off Panels: Laminated panels consisting of an insulating core surfaced on back and front with metal sheets and attached to back of louver.

1. Thickness: 1-inch.
2. Metal Facing Sheets, Aluminum: Not less than 0.063-inch nominal thickness.
3. Insulating Core: Closed cell polyisocyanurate foam core with aluminum foil facer.
4. Edge Treatment: Trim perimeter edges of blank-off panels with louver manufacturer's standard channel frames, with corners mitered and with same finish as panels.
5. Seal perimeter joints between panel faces and louver frames with gaskets or sealant.
6. Panel Finish: Same finish applied to louvers.
7. Attach blank-off panels with clips.

2.5 MATERIALS

A. Aluminum Extrusions: ASTM B 221, Alloy 6063-T5.

B. Aluminum Sheet: ASTM B 209, Alloy 3003 or 5005 with temper as required for forming, or as otherwise recommended by metal producer for required finish.

C. Fasteners: Use types and sizes to suit unit installation conditions.

1. Use Phillips flat-head tamper-resistant screws for exposed fasteners unless otherwise indicated.
2. For fastening aluminum, use aluminum or 300 series stainless-steel fasteners.
3. For color-finished louvers, use fasteners with heads that match color of louvers.

D. Bituminous Paint: Cold-applied asphalt emulsion complying with ASTM D 1187.

2.6 FABRICATION

A. Assemble louvers in factory to minimize field splicing and assembly. Disassemble units as necessary for shipping and handling limitations. Clearly mark units for reassembly and coordinated installation.

B. Vertical Assemblies: Where height of louver units exceeds fabrication and handling limitations, fabricate units to permit field-bolted assembly with close-fitting joints in jambs and mullions, reinforced with splice plates.

1. Continuous Vertical Assemblies: Fabricate units without interrupting blade-spacing pattern unless horizontal mullions are indicated.

C. Maintain equal louver blade spacing to produce uniform appearance.

D. Fabricate frames, including integral sills, to fit in openings of sizes indicated, with allowances made for fabrication and installation tolerances, adjoining material tolerances, and perimeter sealant joints.

1. Frame Type: Channel or flange unless otherwise indicated.

E. Include supports, anchorages, and accessories required for complete assembly.

F. Provide vertical mullions of type and at spacings indicated, but not more than is recommended by manufacturer, or 72 inches o.c., whichever is less.

1. Fully Recessed Mullions: Where indicated, provide mullions fully recessed behind louver blades. Where length of louver exceeds fabrication and handling limitations, fabricate with close-fitting blade splices designed to permit expansion and contraction.
2. Exterior Corners: Prefabricated corner units with mitered and welded blades and with semi-recessed mullions at corners.

G. Provide subsills made of same material as louvers for recessed louvers.

H. Join frame members to each other and to fixed louver blades with fillet welds, threaded fasteners, or both, as standard with louver manufacturer unless otherwise indicated or size of louver assembly makes bolted connections between frame members necessary.

2.7 ALUMINUM FINISHES

A. High-Performance Organic Finish, Two-Coat PVDF: Fluoropolymer finish complying with AAMA 2605 and containing not less than seventy percent (70%) PVDF resin by weight in color coat.

1. Prepare, pretreat, and apply coating to exposed metal surfaces to comply with coating and resin manufacturers' written instructions.
2. Color and Gloss: To match adjacent standing-seam roof, as selected by Architect and Owner from manufacturer's entire range.

PART 3 - EXECUTION

3.1 EXAMINATION

A. Examine substrates and openings, with Installer present, for compliance with requirements for installation tolerances and other conditions affecting performance.

B. Proceed with installation only after unsatisfactory conditions have been corrected.

3.2 PREPARATION

A. Coordinate setting drawings, diagrams, templates, instructions, and directions for installation of anchorages that are to be embedded in concrete or masonry construction. Coordinate delivery of such items to Project site.

3.3 INSTALLATION

A. Locate and place louvers and vents level, plumb, and at indicated alignment with adjacent work.

B. Use concealed anchorages where possible. Provide brass or lead washers fitted to screws where required to protect metal surfaces and to make a weathertight connection.

C. Form closely fitted joints with exposed connections accurately located and secured.

D. Provide perimeter reveals and openings of uniform width for sealants and joint fillers, as indicated.

E. Repair finishes damaged by cutting, welding, soldering, and grinding. Restore finishes so no evidence remains of corrective work. Return items that cannot be refinished in the field to the factory, make required alterations, and refinish entire unit or provide new units.

F. Protect unpainted galvanized- and nonferrous-metal surfaces that are in contact with concrete, masonry, or dissimilar metals from corrosion and galvanic action by applying a heavy coating of bituminous paint or by separating surfaces with waterproof gaskets or nonmetallic flashing.

G. Install concealed gaskets, flashings, joint fillers, and insulation as louver installation progresses, where weathertight louver joints are required. Comply with Section 079200 "Joint Sealants" for sealants applied during louver installation.

3.4 ADJUSTING AND CLEANING

A. Clean exposed louver and vent surfaces that are not protected by temporary covering, to remove fingerprints and soil during construction period. Do not let soil accumulate during construction period.

B. Before final inspection, clean exposed surfaces with water and a mild soap or detergent not harmful to finishes. Thoroughly rinse surfaces and dry.

C. Restore louvers and vents damaged during installation and construction, so no evidence remains of corrective work. If results of restoration are unsuccessful, as determined by Architect, remove damaged units and replace with new units.

1. Touch up minor abrasions in finishes with air-dried coating that matches color and gloss of, and is compatible with, factory-applied finish coating.

END OF SECTION 089000

FLOORS:

CPT-1

Item:	Carpet Tile
Manufacturer:	J +J Flooring
Collection:	Against the Grain
Style:	Style 1840
Color:	2821 Bran
Size:	12” x 48”
Thickness:	0.205” (5mm)
Install:	Ashlar Install
Location:	Refer to Floor Pattern Plan & Finish Schedule
Notes:	Refer to Section 096813
Local Rep:	Robert Fortier 800.241.4586 x57964

CPT-2

Item:	Carpet Tile
Manufacturer:	J + J Flooring
Collection:	Urban Avenue
Style:	Style 1843
Color:	2971 Community
Size:	24” x 24”
Thickness:	0.205” (5mm)
Install:	Ashlar Install
Location:	Refer to Floor Pattern Plan & Finish Schedule
Notes:	Refer to Section 096813
Local Rep:	Robert Fortier 800.241.4586 x57964

LVT-1

Item:	Luxury Vinyl Tile
Manufacturer:	AHF Contract
Style:	Nod to Nature
Color:	07001 Serene Style
Size:	7” x 48”
Thickness:	5mm
Install:	Plank Lay in Thirds
Location:	Refer to Floor Pattern Plan & Finish Schedule
Notes:	Refer to Section 096519
Local Rep:	Roanne Marquardt 203.868.7811

LVT-2

Item:	Luxury Vinyl Tile
Manufacturer:	AHF Contract
Style:	Nod to Nature
Color:	07005 Infinite Beauty
Size:	7” x 48”
Thickness:	5mm
Install:	Plank Lay in Thirds (Miter Edges at All Corners)
Location:	Refer to Floor Pattern Plan & Finish Schedule
Notes:	Refer to Section 096519
Local Rep:	Roanne Marquardt 203.868.7811

PFT-1

Item:	Porcelain Floor Tile
Manufacturer:	American Olean
Style:	Montesano
Color:	Medium Grey, MN73
Size:	15”x 30”
Thickness:	5/16”
Grout:	1/8” Grout Joint; Grout Color: Mapei 27 Silver
Install:	Plank Lay in Thirds
Location:	Toilet Rooms; Refer to Floor Pattern Plan & Finish Schedule
Notes:	Refer to Section 093000
Local Rep:	Roanne Marquardt 203.868.7811

RSF-1

Item:	Rubber Sports Flooring
Manufacturer:	Tarkett
Style:	Inertia Multi-Functional & Sports Rubber Tile
Color:	Lunar Explorer LD7
Size:	24”x 24”
Thickness:	¼”
Location:	Fitness Room and Fitness Center; Refer to Floor Pattern Plan & Finish Schedule
Notes:	Refer to Section 096566
Local Rep:	Carrie Bartucca 860.305.2599

SC-1

Item:	Sealed Concrete
Location:	Refer to Floor Pattern Plan & Finish Schedule.
Notes:	Refer to Section 099123

SDF-1

Item:	Static Dissipative Flooring
Manufacturer:	Armstrong
Style:	Excelon SDT Static Dissipative Tile
Color:	Fossil Gray 51956
Size:	12” x 12”
Thickness:	1/8”
Location:	Refer to Floor Pattern Plan & Finish Schedule
Notes:	Refer to Section 096536
Local Rep:	Roanne Marquardt 203.868.7811

SF-1

Item:	Kitchen Sheet/Safety Flooring
Manufacturer:	Altro
Style:	Altro Classic 25
Color:	Pewter Gray
Thickness:	2.5mm
Size:	Roll, 6’7” x 65'5"
Location:	Kitchen; Refer to Floor Pattern Plan & Finish Schedule
Notes:	Integral Base; Refer to Section 096516
Local Rep:	Carol Polyviou 203.915.9163

WOM-1

Item:	Walk-Off Mat
Manufacturer:	Tarkett
Style:	Assertive Action
Color:	Steelwork
Thickness:	0.187” (4.7mm)
Size:	24” x 24”
Install:	Vertical Ashlar Install
Location:	Refer to Floor Pattern Plan & Finish Schedule
Notes:	Refer to Section 096813
Local Rep:	Scott Montemerlo 860.310.6248

<u>SADDLE/FLOOR TRANSITIONS:</u>

FTS-1

Item:	Stone Threshold
Material:	Solid Marble
Size:	Per Local Code; Single Piece – Width of Door Frame
Location:	To Be Used at Transitions Between PFT & LVT
Notes:	Beveled Edges; Refer to Section 093000

FTS-2

Item:	Rubber Transition Strip
Manufacturer:	Johnsonite/Tarkett
Style:	SLT-XX-A
Color:	Pearl
Size:	5/8” Width (Transition 2.5mm to 5.0mm)
Location:	To Be Used at Transitions Between SF & LVT/CPT
Notes:	Refer to Section 096513
Local Rep:	Carrie Bartucca 860.305.259

FTS-3

Item:	Rubber Transition Strip
Manufacturer:	Johnsonite/Tarkett
Style:	CTA-XX-M
Color:	Pearl
Size:	2½” Width (Transition 6.35mm to 5.0mm)
Location:	To Be Used at Transitions Between RSF & LVT
Notes:	Refer to Section 096513
Local Rep:	Carrie Bartucca 860.305.2599

FTS-4

Item:	Metal Transition Strip
Manufacturer:	Schluter Systems
Style:	Vinpro-T
Color:	Brushed Chrome Anodized
Size:	1” Width (Transition 5.0mm to 4.7mm)
Location:	To Be Used at Transitions Between LVT & WOM
Notes:	Refer to Section 096513
Local Rep:	Carrie Bartucca 860.305.2599

FTS-5

Item:	Rubber Transition Strip
Manufacturer:	Johnsonite/Tarkett
Style:	CRS-XX-A
Color:	Pearl
Size:	1½" W (Transition 5.0mm to Subfloor)
Location:	To Be Used at Transitions Between Resilient Flooring & Concrete Floors
Notes:	Refer to Section 096513
Local Rep:	Carrie Bartucca 860.305.2599

BASE:

PWB-1

Item:	Porcelain Wall Base
Manufacturer:	American Olean
Collection:	Montesano
Style:	Base P439B
Color:	Medium Gray, MN73
Size:	3" x15"
Grout:	1/8" Grout Joint; Grout Color: Mapei 27 Silver
Location:	Toilet Rooms; Refer to Finish Schedule
Notes:	Allow for Longer Lead Time; Inside/Outside Corner Pieces as Required; Refer to Section 093000
Local Rep:	Roanne Marquardt 203.868.7811

RB-1

Item:	Rubber Wall Base
Manufacturer:	Flexco
Style:	Base 2000
Color:	030 Meridien Bone
Size:	4"H
Thickness:	1/8"
Location:	General Base; Refer to Floor Pattern Plan & Finish Schedule
Notes:	Cove Roll; Refer to Section 096513
Local Rep:	Carrie Bartucca 860.305.2599

RB-2

Item:	Rubber Wall Base
Manufacturer:	Flexco
Style:	Base 2000
Color:	024 Stone
Size:	4"H
Thickness:	1/8"
Location:	Fitness Areas; Refer to Floor Pattern Plan & Finish Schedule
Notes:	Cove Roll; Refer to Section 096513
Local Rep:	Carrie Bartucca 860.305.2599

WDB-1

Item:	Wood Base
Manufacturer:	Garden State Lumber

Style:	Metro Collection, MCB512 Base Molding (Pair w/MCS1 Modern Shoe 5/8" x1"), Pine
Color:	Paint w/Trim Paint (PT-2)
Size:	5½"
Thickness:	9/16"
Location:	Corridor Hallways, Vestibule & Custom Casework
Notes:	Refer to Section 062023

WDB-2

Item:	Wood Base/Trim Detail
Manufacturer:	Garden State Lumber
Style:	Metro Collection, MCS1 Modern Shoe 5/8" x1", Pine
Color:	Paint w/Trim Paint (PT-2)
Size:	1"
Thickness:	5/8"
Location:	Vestibule Trim Detail & Base Detail; Refer to Elevation & Finish Schedule
Notes:	Refer to Section 062023

WALLS:

EP-1

Item:	Epoxy Wall Paint
Manufacturer:	Sherwin Williams
Color:	North Star SW6246
Finish:	Eggshell
Location:	Toilet Room; Refer to Finish Schedule
Notes:	Refer to Section 099600
Local Rep:	Jodi Campbell 585.278.7244

EP-2

Item:	Epoxy Trim Paint
Manufacturer:	Benjamin Moore
Color:	Chantilly Lace 0C-65
Finish:	Semi-Gloss
Location:	Toilet Room Trim; Refer to Finish Schedule
Notes:	Refer to Section 099600
Local Rep:	Allyson Smith

EP-3

Item:	Epoxy Wall Paint
Manufacturer:	Sherwin Williams
Color:	Agreeable Gray SW7029
Finish:	Eggshell
Location:	Custodial Rooms, Refer to Finish Schedule
Notes:	Refer to Section 099600
Local Rep:	Jodi Campbell 585.278.7244

FRP-1

Item:	FRP Wall Panel
Manufacturer:	Marlite
Style:	Symmetrix Tile

Pattern:	White Subway Tile
Color:	White SS100-G63
Size:	4’ x 8’ Boards, 3/32” Thickness
Location:	Toilet Rooms
Notes:	Required Accessory Pieces; Corners in PVC Finish to Match; Refer to Section 102600

FRP-2

Item:	FRP Wall Panel
Manufacturer:	Marlite
Style:	Standard FRP
Pattern:	Smooth
Color:	White
Size:	4’ x 8’ Boards, 3/32” Thickness
Install:	Horizontally
Location:	Custodial Rooms; Refer to Finish Schedule
Notes:	Required Accessory Pieces; Corners in PVC Finish to Match; Refer to Section 102600

PT-1

Item:	General Paint
Manufacturer:	Sherwin Williams
Color:	Agreeable Gray SW7029
Finish:	Eggshell
Location:	General Paint, Refer to Finish Schedule
Notes:	Refer to Section 099123
Local Rep:	Jodi Campbell 585.278.7244

PT-2

Item:	General Trim Paint
Manufacturer:	Benjamin Moore
Color:	Chantily Lace 0C-65
Finish:	Semi-Gloss
Location:	General Trim, Custom Millwork/Casework, & Window Interiors. Refer to Finish Schedule
Notes:	Refer to Section 099123
Local Rep:	Allyson Smith

PT-4

Item:	Accent Wall Paint
Manufacturer:	Sherwin Williams
Color:	Gale Force
Finish:	Eggshell
Location:	Refer to Finish Schedule
Notes:	Refer to Section 099123
Local Rep:	Jodi Campbell 585.278.7244

PT-5

Item:	Door Paint
Manufacturer:	Sherwin Williams
Color:	Pewter Tankard

Finish:	Semi-Gloss
Location:	Refer to Finish Schedule
Notes:	Refer to Section 099123
Local Rep:	Jodi Campbell 585.278.7244

WC-1

Item:	Wallcovering
Manufacturer:	Koroseal
Collection:	Authenticity
Color/Style:	Treasure Island 2022-71
Pattern Match:	Random Match, Reverse Hang
Size:	52-54” Width
Location:	Corridor; Refer to Finish Schedule
Notes:	Refer to Section 097200
Local Rep:	Cal Raymond 413.313.1346

WC-2

Item:	Folding Panel Partition Wallcovering
Manufacturer:	Modernfold (Maharam Fabric)
Color/Style:	Tek Wall Ridge, 015 Savor
Pattern Match:	Random Match, Reverse Hang
Size:	55” Width
Location:	Multi-Purpose Room 1 and 2 (Partition Wall)
Notes:	Refer to Section 102239
Local Rep:	Robert Miller 203.366.3895

WD-1

Item:	Wainscot (Stile)
Manufacturer:	Garden Sate Lumber
Color:	Trim Paint, PT-2
Size:	3½” W
Location:	Corridor Hallways & CPU/Library
Notes:	Refer to Section 062023

WDC-1

Item:	Wood Chair Rail
Manufacturer:	Construction Specialties, Acrovyn
Style:	HRW-20 Wood Handrail
Color:	Trim Paint, PT-2
Size:	4½” H x 7-12’ L
Thickness:	3” Wall Offset
Notes:	Factory-finished; Refer to Section 102600.
Local Rep:	Stoessel Sedgwick & O’Connor 860.224.670

WP-1

Item:	Wall Protection, Impact Resistant Panel
Manufacturer:	Altro
Style:	Puraguard
Color:	Salt-139
Size:	4’ x 9’ or 4’ x 10’
Location:	Kitchen

Notes: Refer to Section 102600
Local Rep: Carol Polyviou 203.915.9163

CASEWORK

SS-1

Item: Solid Surface
Manufacturer: Corian
Color: Antarctica
Location: General Countertops; Refer to Elevations and Finish Schedule
Notes: Refer to Section 123661.16
Local Rep: Julie Wilson 860.996.1232

SS-2

Item: Solid Surface
Manufacturer: Corian
Color: Ash Aggregate
Location: Custom Casework
Notes: Refer to Section 123661.16
Local Rep: Julie Wilson 860.996.1232

SS-3

Item: Solid Surface
Manufacturer: Wilsonart
Color: Monte Amiata 9911SS
Location: Bathrooms
Notes: Refer to Section 123661.16
Local Rep: Michele Gould-Bernstein 800.262.7325

SS-4

Item: Solid Surface
Manufacturer: Wilsonart
Color: Designer White D354SL
Location: Window Sill
Notes: Refer to Section 123661.16
Local Rep: Michele Gould-Bernstein 800.262.7325

WDCW-1

Item: Wood Casework
Color: Paint w/PT-2
Location: Custom Casework; Refer to Elevations and Finish Schedule
Notes: Refer to Section 064023

WDCW-2

Item: Wood Casework
Color: Match color from Wilsonart Plastic Laminate, Crystal
Location: Upper & Base Cabinets; Refer to Elevations and Finish Schedule
Notes: Refer to Section 064113

CEILINGS:

ACT-1

Item:	Acoustic Ceiling Tile
Manufacturer:	Armstrong
Style:	Ultima
Color:	White
Size:	2' x 2'
Location:	General Ceiling Unless Otherwise Noted
Notes:	Square Lay-In; Prelude 15/16" Suspension System; Refer to Section 095113
Local Rep:	Sandra Niesyn 860.490.5604

ACT-2

Item:	Acoustical Ceiling Tile
Manufacturer:	Armstrong
Style:	Ultima Health Zone
Color:	White
Size:	2' x 2'
Location:	Toilets Rooms; Kitchen; Refer to Finish Schedule
Notes:	Square Lay-In; Prelude 15/16" Suspension System; Refer to Section 095113
Local Rep:	Sandra Niesyn 860.490.5604

PT-3

Item:	Ceiling Paint
Manufacturer:	Sherwin Williams
Color:	Super White
Finish:	Flat
Location:	Gypsum Board Ceilings and Soffits; Refer to Finish Schedule
Notes:	Refer to Section 099123
Local Rep:	Jodi Campbell 585.278.7244

MISCELLANEOUS:

TB-1

Item:	Tack Board
Manufacturer:	Forbo
Style:	Linoleum Surfacing Material
Color:	2187 Brown Rice
Size:	Varies; See Wall Board Schedule
Location:	Refer to Drawings
Notes:	Refer to Section 101100

TB-2

Item:	Tack Board
Manufacturer:	Claridge
Style:	Guilford of Maine Fabric Bulletin Board
Color:	Belmont Silver GB010
Size:	Varies; See Kiosk Elevation
Location:	Refer to Drawings
Notes:	Refer to Section 101100

TP-1

Item:	Toilet Partition
Manufacturer:	Scranton Products
Style:	Hiny Hiders
Material:	Plastic (HDPE)
Texture:	Orange Peel
Color:	Grey
Size:	55” Standard Height
Location:	Refer to Drawings
Notes:	Floor Mounted Overhead Braced; Refer to Section 102113.19
Local Rep:	Jim Rogers 570.396.0399

WB-1

Item:	White Board
Manufacturer:	Claridge
Style:	LCS Deluxe
Color:	White No. 100
Size:	Varies; See Wall Board Schedule
Location:	Refer to Drawings
Notes:	Refer to Section 101100

<u>WINDOW TREATMENTS</u>

RS-1

Item:	Inside Mount Roller Shade
Manufacturer:	SWF Contract
Style:	Parallel
Openness Factor:	Blackout
Control Type:	Manual Lift
Color:	Linen/Fog C9817
Location:	Multi-Purpose Rooms
Notes:	Heat-Seamed Hem Bar; Fascia Valance; Refer to Section 122413

RS-2

Item:	Inside Mount Roller Shade
Manufacturer:	SWF Contract
Style:	Crosshatch R300
Openness Factor:	3%
Control Type:	Manual Lift
Color:	Eggshell/Fog C8312
Location:	Throughout Facility – Provide in All Rooms with Exterior Windows EXCEPT Lobbies, Vestibules, Corridors, Toilet Rooms with Obscured Glass, and Multi-Purpose Rooms.
Notes:	Heat-Seamed Hem Bar; Fascia Valance; Refer to Section 122413

END OF SECTION 090000

SECTION 092216 - NON-STRUCTURAL METAL FRAMING

PART 1 - GENERAL

1.1 RELATED DOCUMENTS

A. Drawings and general provisions of the Contract, including General and Supplementary Conditions and Division 01 Specification Sections, apply to this Section.

1.2 SUMMARY

A. Section Includes:

1. Non-load-bearing steel framing for interior partitions.
2. Suspension systems for interior ceilings and soffits.

1.3 ACTION SUBMITTALS

A. Product Data: For each type of product.

PART 2 - PRODUCTS

2.1 PERFORMANCE REQUIREMENTS

A. STC-Rated Assemblies: For STC-rated assemblies, provide materials and construction identical to those tested in assembly indicated, according to ASTM E 90 and classified according to ASTM E 413 by an independent testing agency.

2.2 FRAMING SYSTEMS

A. Framing Members, General: Comply with ASTM C 754 for conditions indicated.

1. Steel Sheet Components: Comply with ASTM C 645 requirements for metal unless otherwise indicated.
2. Protective Coating: ASTM A 653, G60, hot-dip galvanized unless otherwise indicated.

B. Studs and Tracks: ASTM C 645.

1. Steel Studs and Tracks:

a. Minimum Base-Metal Thickness: 16 20-gauge.
b. Depth: As indicated on Drawings.

C. Slip-Type Head Joints: Where indicated, provide the following:

1. Deflection Track: Steel sheet top track manufactured to prevent cracking of finishes applied to interior partition framing resulting from deflection of structure above; in thickness not less than indicated for studs and in width to accommodate depth of studs.

a. Products: Subject to compliance with requirements, available products that may be incorporated into the Work include, but are not limited to, the following:

1) ClarkDietrich; **MaxTrak Slotted Deflection Track**
2) MarinoWare; **Slotted Track**
3) MBA Building Supplies; **Slotted Deflecto Track**
4) Substitutions: Under provisions of Section 012500 "Substitution Procedures".

D. Flat Strap and Backing Plate: Steel sheet for blocking and bracing in length and width indicated.

1. Minimum Base-Metal Thickness: 0.018-inch.

E. Hat-Shaped, Rigid Furring Channels: ASTM C 645.

1. Minimum Base-Metal Thickness: 0.018-inch.
2. Depth: 7/8-inch.

2.3 SUSPENSION SYSTEMS

A. Tie Wire: ASTM A 641, Class 1 zinc coating, soft temper, 0.062-inch-diameter wire, or double strand of 0.048-inch-diameter wire.

B. Wire Hangers: ASTM A 641, Class 1 zinc coating, soft temper, 0.16 -inch in diameter.

C. Carrying Channels (Main Runners): Cold-rolled, commercial-steel sheet with a base-metal thickness of 0.053-inch and minimum ½-inch-wide flanges.

1. Depth: As required per manufacturer.

2.4 AUXILIARY MATERIALS

A. General: Provide auxiliary materials that comply with referenced installation standards.

1. Fasteners for Metal Framing: Of type, material, size, corrosion resistance, holding power, and other properties required to fasten steel members to substrates.

B. Rigid Connections: Universal framing clip to attach and support rigid framing conditions including shear, tension, and two-axis loading.

1. Products: Subject to compliance with requirements, available products that may be incorporated into the Work include, but are not limited to, the following:

a. Dietrich Metal Framing; **Uni-Clip**.
b. Substitutions: Under provisions of Section 012500 "Substitution Procedures".

PART 3 - EXECUTION

3.1 EXAMINATION

A. Examine areas and substrates, with Installer present, and including welded hollow-metal frames, cast-in anchors, and structural framing, for compliance with requirements and other conditions affecting performance of the Work.

B. Proceed with installation only after unsatisfactory conditions have been corrected.

3.2 PREPARATION

A. Suspended Assemblies: Coordinate installation of suspension systems with installation of overhead structure to ensure that inserts and other provisions for anchorages to building structure have been installed to receive hangers at spacing required to support the Work and that hangers will develop their full strength.

3.3 INSTALLATION, GENERAL

A. Installation Standard: ASTM C 754.

1. Gypsum Board Assemblies: Also comply with requirements in ASTM C 840 that apply to framing installation.

B. Install framing and accessories plumb, square, and true to line, with connections securely fastened.

C. Install supplementary framing, and blocking to support fixtures, equipment services, heavy trim, grab bars, toilet accessories, furnishings, or similar construction.

D. Install bracing at terminations in assemblies.

3.4 INSTALLING FRAMED ASSEMBLIES

A. Install framing system components according to spacings indicated, but not greater than spacings required by referenced installation standards for assembly types.

B. Install studs so flanges within framing system point in same direction.

C. Install tracks at floors and overhead supports. Extend framing full height to structural supports or substrates above suspended ceilings except where partitions are indicated to terminate at suspended ceilings. Continue framing around ducts penetrating partitions above ceiling.

1. Slip-Type Head Joints: Where framing extends to overhead structural supports, install to produce joints at tops of framing systems that prevent axial loading of finished assemblies.
2. Door Openings: Screw vertical studs at jambs to jamb anchor clips on door frames.

    a. Install two (2) studs at each jamb unless otherwise indicated.
    b. Extend jamb studs through suspended ceilings and attach to underside of overhead structure.

3. Other Framed Openings: Frame openings other than door openings the same as required for door openings unless otherwise indicated. Install framing below sills of openings to match framing required above door heads.

4. Sound-Rated Partitions: Install framing to comply with sound-rated assembly indicated.

D. Installation Tolerance: Install each framing member so fastening surfaces vary not more than 1/8-inch from the plane formed by faces of adjacent framing.

3.5 INSTALLING CEILING SUSPENSION SYSTEMS

A. Install suspension system components according to spacings indicated, but not greater than spacings required by referenced installation standards for assembly types.

B. Isolate suspension systems from building structure where they abut or are penetrated by building structure to prevent transfer of loading imposed by structural movement.

C. Suspend hangers from building structure as follows:

1. Install hangers plumb and free from contact with insulation or other objects within ceiling plenum that are not part of supporting structural or suspension system.

a. Splay hangers only where required to miss obstructions and offset resulting horizontal forces by bracing, countersplaying, or other equally effective means.

2. Where width of ducts and other construction within ceiling plenum produces hanger spacings that interfere with locations of hangers required to support standard suspension system members, install supplemental suspension members and hangers in the form of trapezes or equivalent devices.

a. Size supplemental suspension members and hangers to support ceiling loads within performance limits established by referenced installation standards.

3. Wire Hangers: Secure by looping and wire tying, either directly to structures or to inserts, eye screws, or other devices and fasteners that are secure and appropriate for substrate, and in a manner that will not cause hangers to deteriorate or otherwise fail.

4. Do not connect or suspend steel framing from ducts, pipes, or conduit.

D. Seismic Bracing: Sway-brace suspension systems with hangers used for support.

E. Installation Tolerances: Install suspension systems that are level to within 1/8 inch in 12 feet measured lengthwise on each member that will receive finishes and transversely between parallel members that will receive finishes.

END OF SECTION 092216

SECTION 092900 - GYPSUM BOARD

PART 1 - GENERAL

1.1 RELATED DOCUMENTS

A. Drawings and general provisions of the Contract, including General and Supplementary Conditions and Division 01 Specification Sections, apply to this Section.

1.2 SUMMARY

A. Section Includes:

1. Interior gypsum board.

B. Related Requirements:

1. Section 092216 "Non-Structural Metal Framing" for non-structural framing and suspension systems that support gypsum board panels.

1.3 ACTION SUBMITTALS

A. Product Data: For each type of product.

B. Samples: For the following products:

1. Trim Accessories: Full-size Sample in 12-inch-long length for each trim accessory indicated.

1.4 DELIVERY, STORAGE AND HANDLING

A. Store materials inside under cover and keep them dry and protected against weather, condensation, direct sunlight, construction traffic, and other potential causes of damage. Stack panels flat and supported on risers on a flat platform to prevent sagging.

1.5 FIELD CONDITIONS

A. Environmental Limitations: Comply with ASTM C 840 requirements or gypsum board manufacturer's written recommendations, whichever are more stringent.

B. Do not install paper-faced gypsum panels until installation areas are enclosed and conditioned.

C. Do not install panels that are wet, those that are moisture damaged, and those that are mold damaged.

1. Indications that panels are wet or moisture damaged include, but are not limited to, discoloration, sagging, or irregular shape.
2. Indications that panels are mold damaged include, but are not limited to, fuzzy or splotchy surface contamination and discoloration.

PART 2 - PRODUCTS

2.1 PERFORMANCE REQUIREMENTS

A. STC-Rated Assemblies: For STC-rated assemblies, provide materials and construction identical to those tested in assembly indicated according to ASTM E 90 and classified according to ASTM E 413 by an independent testing agency.

2.2 GYPSUM BOARD, GENERAL

A. Size: Provide maximum lengths and widths available that will minimize joints in each area and that correspond with support system indicated.

2.3 INTERIOR GYPSUM BOARD

A. Manufacturers: Subject to compliance with requirements, available manufacturers offering products that may be incorporated into the Work include, but are not limited to, the following:

1. Georgia-Pacific Gypsum LLC
2. National Gypsum Company
3. USG Corporation
4. Substitutions: Under provisions of Section 012500 “Substitution Procedures”.

B. Abuse-Resistant Gypsum Board: ASTM C 1629.

1. Core: As indicated on Drawings.
2. Surface Abrasion: Meets or exceeds Level 3 requirements.
3. Surface Indentation: Meets or exceeds Level 1 requirements.
4. Single-Drop Soft-Body Impact: Meets or exceeds Level 1 requirements.
5. Long Edges: Tapered.
6. Mold Resistance: ASTM D 3273, score of 10 as rated according to ASTM D 3274.

C. Mold (Moisture)-Resistant Gypsum Board: ASTM C 1396. With moisture- and mold-resistant core and paper surfaces.

1. Core: As indicated on Drawings.
2. Long Edges: Tapered.
3. Mold Resistance: ASTM D 3273, score of 10 as rated according to ASTM D 3274.

2.4 TRIM ACCESSORIES

A. Interior Trim: ASTM C 1047.

1. Material: Galvanized or aluminum-coated steel sheet or rolled zinc.
2. Shapes:

a. Cornerbead.
b. Bullnose bead.
c. LC-Bead: J-shaped; exposed long flange receives joint compound.
d. L-Bead: L-shaped; exposed long flange receives joint compound.
e. U-Bead: J-shaped; exposed short flange does not receive joint compound.

f. Expansion (control) joint.

2.5 JOINT TREATMENT MATERIALS

A. General: Comply with ASTM C 475.

B. Joint Tape:

1. Interior Gypsum Board: Paper.

C. Joint Compound for Interior Gypsum Board: For each coat use formulation that is compatible with other compounds applied on previous or for successive coats.

1. Prefilling: At open joints, rounded or beveled panel edges, and damaged surface areas, use setting-type taping compound.
2. Embedding and First Coat: For embedding tape and first coat on joints, fasteners, and trim flanges, use drying-type, all-purpose compound.
3. Fill Coat: For second coat, use drying-type, all-purpose compound.
4. Finish Coat: For third coat, use drying-type, all-purpose compound.
5. Skim Coat: For final coat of Level 5 finish, use drying-type, all-purpose compound.

2.6 AUXILIARY MATERIALS

A. General: Provide auxiliary materials that comply with referenced installation standards and manufacturer's written recommendations.

B. Steel Drill Screws: ASTM C 1002, unless otherwise indicated.

1. Use screws complying with ASTM C 954 for fastening panels to steel members from 0.033- to 0.112-inch-thick.

C. Sound Attenuation Blankets: ASTM C 665, Type I (blankets without membrane facing) produced by combining thermosetting resins with mineral fibers manufactured from glass, slag wool, or rock wool.

D. Acoustical Joint Sealant: Manufacturer's standard non-sag, paintable, non-staining latex sealant complying with ASTM C 834. Product effectively reduces airborne sound transmission through perimeter joints and openings in building construction as demonstrated by testing representative assemblies according to ASTM E 90.

1. Products: Subject to compliance with requirements, available products that may be incorporated into the Work include, but are not limited to, the following:

a. Pecora Corporation; **AC-20 FTR**
b. Specified Technologies, Inc.; **Smoke N Sound Acoustical Sealant**
c. USG Corporation; **SHEETROCK Acoustical Sealant**
d. Substitutions: Under provisions of Section 012500 “Substitution Procedures”.

2. Acoustical joint sealant shall have a VOC content of 250 g/L or less when calculated according to 40 CFR 59, Subpart D (EPA Method 24).

E. Thermal Insulation: As specified in Section 072100 "Thermal Insulation."

PART 3 - EXECUTION

3.1 EXAMINATION

A. Examine areas and substrates including welded hollow-metal frames and framing, with Installer present, for compliance with requirements and other conditions affecting performance.

B. Examine panels before installation. Reject panels that are wet, moisture damaged, and mold damaged.

C. Proceed with installation only after unsatisfactory conditions have been corrected.

3.2 APPLYING AND FINISHING PANELS, GENERAL

A. Comply with ASTM C 840.

B. Install ceiling panels across framing to minimize the number of abutting end joints and to avoid abutting end joints in central area of each ceiling. Stagger abutting end joints of adjacent panels not less than one (1) framing member.

C. Install panels with face side out. Butt panels together for a light contact at edges and ends with not more than 1/16-inch of open space between panels. Do not force into place.

D. Locate edge and end joints over supports, except in ceiling applications where intermediate supports or gypsum board back-blocking is provided behind end joints. Do not place tapered edges against cut edges or ends. Stagger vertical joints on opposite sides of partitions. Do not make joints other than control joints at corners of framed openings.

E. Form control and expansion joints with space between edges of adjoining gypsum panels.

F. Cover both faces of support framing with gypsum panels in concealed spaces (above ceilings, etc.), except in chases braced internally.

1. Unless concealed application is indicated or required for sound, fire, air, or smoke ratings, coverage may be accomplished with scraps of not less than 8 sq. ft. in area.
2. Fit gypsum panels around ducts, pipes, and conduits.
3. Where partitions intersect structural members projecting below underside of floor/roof slabs and decks, cut gypsum panels to fit profile formed by structural members; allow ¼- to 3/8-inch-wide joints to install sealant.

G. Isolate perimeter of gypsum board applied to non-load-bearing partitions at structural abutments, except floors. Provide ¼- to ½-inch-wide spaces at these locations and trim edges with edge trim where edges of panels are exposed. Seal joints between edges and abutting structural surfaces with acoustical sealant.

H. Attachment to Steel Framing: Attach panels so leading edge or end of each panel is attached to open (unsupported) edges of stud flanges first.

I. STC-Rated Assemblies: Seal construction at perimeters, behind control joints, and at openings and penetrations with a continuous bead of acoustical sealant. Install acoustical sealant at both faces of partitions at perimeters and through penetrations. Comply with ASTM C 919 and with

manufacturer's written recommendations for locating edge trim and closing off sound-flanking paths around or through assemblies, including sealing partitions above acoustical ceilings.

J. Install sound attenuation blankets before installing gypsum panels unless blankets are readily installed after panels have been installed on one side.

3.3 APPLYING INTERIOR GYPSUM BOARD

A. Install interior gypsum board where indicated on Drawings.

B. Single-Layer Application:

1. On ceilings, apply gypsum panels before wall/partition board application to greatest extent possible and at right angles to framing unless otherwise indicated.
2. On partitions/walls, apply gypsum panels in most economical direction, with ends and edges occurring over firm bearing unless otherwise indicated or required by fire-resistance-rated assembly, and minimize end joints.

   a. Stagger abutting end joints not less than one framing member in alternate courses of panels.
3. Fastening Methods: Apply gypsum panels to supports with steel drill screws.

3.4 INSTALLING TRIM ACCESSORIES

A. General: For trim with back flanges intended for fasteners, attach to framing with same fasteners used for panels. Otherwise, attach trim according to manufacturer's written instructions.

B. Control Joints: Install control joints according to ASTM C 840 and in specific locations approved by Architect for visual effect.

C. Interior Trim: Install in the following locations:

1. Cornerbead: Use at outside corners, unless otherwise indicated.
2. Bullnose Bead: Use at outside corners.
3. LC-Bead: Use at exposed panel edges.
4. L-Bead: Use where indicated.
5. U-Bead: Use at exposed panel edges.

3.5 FINISHING GYPSUM BOARD

A. General: Treat gypsum board joints, interior angles, edge trim, control joints, penetrations, fastener heads, surface defects, and elsewhere as required to prepare gypsum board surfaces for decoration. Promptly remove residual joint compound from adjacent surfaces.

B. Prefill open joints, rounded or beveled edges, and damaged surface areas.

C. Apply joint tape over gypsum board joints, except for trim products specifically indicated as not intended to receive tape.

D. Gypsum Board Finish Levels: Finish panels to levels indicated below and according to ASTM C 840:

1. Level 4: At panel surfaces that will be exposed to view, receiving wallcoverings and flat paints.

    a. Primer and its application to surfaces are specified in Section 099123 "Interior Painting."

2. Level 5: At panel surfaces that will be exposed to view, receiving eggshell, semi-gloss, and gloss enamels.

    a. Primer and its application to surfaces are specified in Sections 099123 "Interior Painting" and 099600 “High-Performance Coatings”.

3.6 PROTECTION

A. Protect adjacent surfaces from drywall compound and promptly remove from floors and other non-drywall surfaces. Repair surfaces stained, marred, or otherwise damaged during drywall application.

B. Protect installed products from damage from weather, condensation, direct sunlight, construction, and other causes during remainder of the construction period.

C. Remove and replace panels that are wet, moisture damaged, and mold damaged.

1. Indications that panels are wet or moisture damaged include, but are not limited to, discoloration, sagging, or irregular shape.
2. Indications that panels are mold damaged include, but are not limited to, fuzzy or splotchy surface contamination and discoloration.

END OF SECTION 092900

SECTION 093000 - TILING

PART 1 - GENERAL

1.1 RELATED DOCUMENTS

A. Drawings and general provisions of the Contract, including General and Supplementary Conditions and Division 01 Specification Sections, apply to this Section.

1.2 SUMMARY

A. Section Includes:

1. Porcelain tile.
2. Stone thresholds.
3. Crack isolation membrane.

B. Related Sections:

1. Section 079200 "Joint Sealants" for sealing of expansion, contraction, control, and isolation joints in tile surfaces.

1.3 DEFINITIONS

A. General: Definitions in the ANSI A108 series of tile installation standards and in ANSI A137.1 apply to Work of this Section unless otherwise specified.

B. ANSI A108 Series: ANSI A108.01, ANSI A108.02, ANSI A108.1A, ANSI A108.1B, ANSI A108.1C, ANSI A108.4, ANSI A108.5, ANSI A108.6, ANSI A108.8, ANSI A108.9, ANSI A108.10, ANSI A108.11, ANSI A108.12, ANSI A108.13, ANSI A108.14, ANSI A108.15, ANSI A108.16, and ANSI A108.17, which are contained in its "Specifications for Installation of Ceramic Tile."

1.4 PREINSTALLATION MEETINGS

A. Preinstallation Conference: Conduct conference at Project site.

1. Review requirements in ANSI A108.01 for substrates and for preparation by other trades.

1.5 ACTION SUBMITTALS

A. Product Data: For each type of product.

B. Shop Drawings: Show locations of each type of tile and tile pattern. Show widths, details, and locations of expansion, contraction, control, and isolation joints in tile substrates and finished tile surfaces.

C. Samples:

1. Full-size units of each type and composition of tile and for each color and finish required.
2. Full-size units of each type of trim and accessory for each color and finish required.
3. Stone thresholds in 6-inch lengths.

1.6 INFORMATIONAL SUBMITTALS

A. Qualification Data: For Installer.

B. Product Test Reports: For tile-setting and -grouting products.

1.7 MAINTENANCE MATERIAL SUBMITTALS

A. Furnish extra materials that match and are from same production runs as products installed and that are packaged with protective covering for storage and identified with labels describing contents.

1. Tile and Trim Units: Furnish quantity of full-size units equal to three percent (3%) of amount installed for each type, composition, color, pattern, and size indicated.
2. Grout: Furnish quantity of grout equal to three percent (3%) of amount installed for each type, composition, and color indicated.

1.8 QUALITY ASSURANCE

A. Installer Qualifications:

1. Installer employs installers recognized by the U.S. Department of Labor as Journeyman Tile Layers.

1.9 DELIVERY, STORAGE, AND HANDLING

A. Deliver and store packaged materials in original containers with seals unbroken and labels intact until time of use. Comply with requirements in ANSI A137.1 for labeling tile packages.

B. Store tile and cementitious materials on elevated platforms, under cover, and in a dry location.

C. Store aggregates where grading and other required characteristics can be maintained and contamination can be avoided.

D. Store liquid materials in unopened containers and protected from freezing.

1.10 FIELD CONDITIONS

A. Environmental Limitations: Do not install tile until construction in spaces is complete and ambient temperature and humidity conditions are maintained at the levels indicated in referenced standards and manufacturer's written instructions.

PART 2 - PRODUCTS

2.1 MANUFACTURERS

A. Source Limitations for Tile: Obtain tile of each type and color or finish from single source or producer.

1. Obtain tile of each type and color or finish from same production run and of consistent quality in appearance and physical properties for each contiguous area.

B. Source Limitations for Setting and Grouting Materials: Obtain ingredients of a uniform quality for each mortar, adhesive, and grout component from single manufacturer and each aggregate from single source or producer.

1. Obtain setting and grouting materials, except for unmodified Portland cement and aggregate, from single manufacturer.
2. Obtain crack isolation membrane, except for sheet products, from manufacturer of setting and grouting materials.

C. Source Limitations for Other Products: Obtain each of the following products specified in this Section from a single manufacturer for each product:

1. Stone thresholds.
2. Crack isolation membrane.

2.2 PRODUCTS, GENERAL

A. ANSI Tile Standard: Provide tile that complies with Standard grade requirements for types, compositions, and other characteristics indicated.

1. Ceramic: ANSI A137.1.

B. ANSI Standards for Tile Installation Materials: Provide materials complying with ANSI A108.02, ANSI standards referenced in other Part 2 articles, ANSI standards referenced by TCNA installation methods specified in tile installation schedules, and other requirements specified.

C. Factory Blending: For tile exhibiting color variations within ranges, blend tile in factory and package so tile units taken from one (1) package show same range in colors as those taken from other packages and match approved Samples.

2.3 TILE PRODUCTS

A. Manufacturers: Subject to compliance with requirements, available manufacturers offering products that may be incorporated into the Work include, but are not limited to, the following:

1. American Olean; a division of Dal-Tile International, Inc.
2. Creative Materials Corp.
3. Crossville, Inc.
4. Daltile; a division of Dal-Tile International, Inc.
5. Substitutions: Under provisions of Section 012500 “Substitution Procedures”.

B. Tile Type (**PFT**): Unglazed porcelain floor tile.

1. Basis-of-Design Product:

   a. American Olean; a division of Dal-Tile International, Inc.; **Montesano**

2. Certification: Porcelain tile certified by the Porcelain Tile Certification Agency.
3. Face: Plain with square or cushion edges.
4. Dynamic Coefficient of Friction: ASTM C 1028.

   a. Wet: Not less than 0.42.

5. Size, Thickness, Tile Color and Pattern and Grout Color: As indicated in Section 090000 “Schedule of Finishes”.
6. Trim Units: Coordinated with sizes and coursing of adjoining flat tile where applicable and matching characteristics of adjoining flat tile. Provide shapes as follows, selected from manufacturer's standard shapes:

   a. Base (**PWB**): Size as indicated in Section 090000 “Schedule of Finishes”.
   b. External Corners: Surface bullnose, module size same as adjoining flat tile.
   c. Internal Corners: Field-butted square corners.

2.4 THRESHOLDS

A. General: Fabricate to sizes and profiles indicated or required to provide transition between adjacent floor finishes.

1. Bevel edges at 1:2 slope, with lower edge of bevel aligned with or up to 1/16-inch above adjacent floor surface. Finish bevel to match top surface of threshold. Limit height of threshold to ½-inch or less above adjacent floor surface.

B. Marble Thresholds (**FTS-1**): ASTM C 503, with a minimum abrasion resistance of 10 per ASTM C 1353 or ASTM C 241 and with honed finish.

1. Description: Uniform, fine- to medium-grained stone in color as selected by Architect and Owner.

2.5 CRACK ISOLATION MEMBRANE

A. General: Manufacturer's standard product that complies with ANSI A118.12 for standard performance and is recommended by the manufacturer for the application indicated. Include reinforcement and accessories recommended by manufacturer.

B. Chlorinated Polyethylene Sheet: Non-plasticized, chlorinated polyethylene faced on both sides with nonwoven polyester fabric; 0.030-inch nominal thickness.

1. Products: Subject to compliance with requirements, available products that may be incorporated into the Work include, but are not limited to, the following:

   a. Noble Company (The); **Nobleseal CIS**
   b. Substitutions: Under provisions of Section 012500 “Substitution Procedures”.

2.6 SETTING MATERIALS

A. Latex-Portland Cement Mortar (Thin Set): ANSI A118.4; white unless otherwise indicated.

1. Manufacturers: Subject to compliance with requirements, available manufacturers offering products that may be incorporated into the Work include, but are not limited to, the following:

   a. Bostik, Inc.
   b. Custom Building Products
   c. Laticrete International, Inc.
   d. MAPEI Corporation
   e. Substitutions: Under provisions of Section 012500 “Substitution Procedures”.

2. Provide prepackaged, dry-mortar mix containing dry, redispersible, vinyl acetate or acrylic additive to which only water must be added at Project site.

2.7 GROUT MATERIALS

A. Basis-of-Design Product:

1. MAPEI Corporation

B. Manufacturers: Subject to compliance with requirements, available manufacturers offering products that may be incorporated into the Work include, but are not limited to, the following:

1. Bostik, Inc.
2. Custom Building Products
3. Laticrete International, Inc.
4. Substitutions: Under provisions of Section 012500 “Substitution Procedures”.

C. Water-Cleanable Epoxy Grout: ANSI A118.3.

1. Provide product capable of withstanding continuous and intermittent exposure to temperatures of up to 140 deg F (60 deg C) and 212 deg F (100 deg C), respectively, and certified by manufacturer for intended use.
2. Colors: As indicated in Section 090000 “Schedule of Finishes”.

2.8 MISCELLANEOUS MATERIALS

A. Trowelable Underlayments and Patching Compounds: Latex-modified, Portland cement-based formulation provided or approved by manufacturer of tile-setting materials for installations indicated.

B. Tile Cleaner: A neutral cleaner capable of removing soil and residue without harming tile and grout surfaces, specifically approved for materials and installations indicated by tile and grout manufacturers.

C. Grout Sealer: Manufacturer's standard silicone product for sealing grout joints and that does not change color or appearance of grout.

1. Products: Subject to compliance with requirements, available products that may be incorporated into the Work include, but are not limited to, the following:

    a. Bostik, Inc.; **CeramaSeal Grout & Tile Sealer**
    b. Custom Building Products; **Surfaceguard Sealer**
    c. MAPEI Corporation; **KER003, Silicone Spray Sealer for Cementitious Tile Grout**
    d. Substitutions: Under provisions of Section 012500 “Substitution Procedures”.

2.9 MIXING MORTARS AND GROUT

A. Mix mortars and grouts to comply with referenced standards and mortar and grout manufacturers' written instructions.

B. Add materials, water, and additives in accurate proportions.

C. Obtain and use type of mixing equipment, mixer speeds, mixing containers, mixing time, and other procedures to produce mortars and grouts of uniform quality with optimum performance characteristics for installations indicated.

PART 3 - EXECUTION

3.1 EXAMINATION

A. Examine substrates, areas, and conditions where tile will be installed, with Installer present, for compliance with requirements for installation tolerances and other conditions affecting performance of installed tile.

1. Verify that substrates for setting tile are firm, dry, clean, free of coatings that are incompatible with tile-setting materials including curing compounds and other substances that contain soap, wax, oil, or silicone; and comply with flatness tolerances required by ANSI A108.01 for installations indicated.
2. Verify that concrete substrates for tile floors installed with thin-set mortar comply with surface finish requirements in ANSI A108.01 for installations indicated.

    a. Verify that surfaces that received a steel trowel finish have been mechanically scarified.
    b. Verify that protrusions, bumps, and ridges have been removed by sanding or grinding.

3. Verify that installation of grounds, anchors, recessed frames, electrical and mechanical units of work, and similar items located in or behind tile has been completed.
4. Verify that joints and cracks in tile substrates are coordinated with tile joint locations; if not coordinated, adjust joint locations in consultation with Architect.

B. Proceed with installation only after unsatisfactory conditions have been corrected.

3.2 PREPARATION

A. Fill cracks, holes, and depressions in concrete substrates for tile floors installed with thin-set mortar with trowelable leveling and patching compound specifically recommended by tile-setting material manufacturer.

B. Blending: For tile exhibiting color variations, verify that tile has been factory blended and packaged so tile units taken from one (1) package show same range of colors as those taken from other packages and match approved Samples. If not factory blended, either return to manufacturer or blend tiles at Project site before installing.

3.3 TILE INSTALLATION

A. Comply with TCNA's "Handbook for Ceramic, Glass, and Stone Tile Installation" for TCNA installation methods specified in tile installation schedules. Comply with parts of the ANSI A108 Series "Specifications for Installation of Ceramic Tile" that are referenced in TCNA installation methods, specified in tile installation schedules, and apply to types of setting and grouting materials used.

B. Extend tile work into recesses and under or behind equipment and fixtures to form complete covering without interruptions unless otherwise indicated. Terminate work neatly at obstructions, edges, and corners without disrupting pattern or joint alignments.

C. Accurately form intersections and returns. Perform cutting and drilling of tile without marring visible surfaces. Carefully grind cut edges of tile abutting trim, finish, or built-in items for straight aligned joints. Fit tile closely to electrical outlets, piping, fixtures, and other penetrations so plates, collars, or covers overlap tile.

D. Provide manufacturer's standard trim shapes where necessary to eliminate exposed tile edges.

E. Jointing Pattern: Lay tile in grid pattern unless otherwise indicated. Lay out tile work and center tile fields in both directions in each space or on each wall area. Lay out tile work to minimize the use of pieces that are less than half of a tile. Provide uniform joint widths unless otherwise indicated.

   1. Where adjoining tiles on floor, base, walls, or trim are specified or indicated to be same size, align joints.

F. Joint Widths: Unless otherwise indicated, install tile with the following joint widths:

   1. Floor Tile: 1/8-inch.

G. Expansion Joints: Provide expansion joints and other sealant-filled joints, including control, contraction, and isolation joints, where indicated. Form joints during installation of setting materials, mortar beds, and tile. Do not saw-cut joints after installing tiles.

   1. Where joints occur in concrete substrates, locate joints in tile surfaces directly above them.

H. Stone Thresholds: Install stone thresholds in same type of setting bed as adjacent floor unless otherwise indicated.

1. Do not extend crack isolation membrane under thresholds set in latex-Portland cement mortar. Fill joints between such thresholds and adjoining tile set on crack isolation membrane with elastomeric sealant.

I. Grout Sealer: Apply grout sealer to grout joints according to grout-sealer manufacturer's written instructions. As soon as grout sealer has penetrated grout joints, remove excess sealer and sealer from tile faces by wiping with soft cloth.

3.4 CRACK ISOLATION MEMBRANE INSTALLATION

A. Install crack isolation membrane to comply with ANSI A108.17 and manufacturer's written instructions to produce membrane of uniform thickness and bonded securely to substrate.

B. Allow crack isolation membrane to cure before installing tile or setting materials over it.

3.5 CLEANING AND PROTECTING

A. Remove and replace tile that is damaged or that does not match adjoining tile. Provide new matching units, installed as specified and in a manner to eliminate evidence of replacement.

B. Cleaning: On completion of placement and grouting, clean all tile surfaces so they are free of foreign matter.

1. Remove grout residue from tile as soon as possible.
2. Clean grout smears and haze from tile according to tile and grout manufacturer's written instructions but no sooner than ten (10) days after installation. Use only cleaners recommended by tile and grout manufacturers and only after determining that cleaners are safe to use by testing on samples of tile and other surfaces to be cleaned. Protect metal surfaces and plumbing fixtures from effects of cleaning. Flush surfaces with clean water before and after cleaning.

C. Protect installed tile work with Kraft paper or other heavy covering during construction period to prevent staining, damage, and wear. If recommended by tile manufacturer, apply coat of neutral protective cleaner to completed tile walls and floors.

D. Prohibit foot and wheel traffic from tiled floors for at least seven (7) days after grouting is completed.

E. Before final inspection, remove protective coverings and rinse neutral protective cleaner from tile surfaces.

3.6 INTERIOR CERAMIC TILE INSTALLATION SCHEDULE

A. Interior Floor Installations, Concrete Subfloor:

1. Ceramic Tile Installation (**PFT**): TCNA F125A; thin-set mortar on crack isolation membrane.

a. Thin-Set Mortar: Latex-Portland cement mortar.
b. Grout: Water-cleanable epoxy grout.

END OF SECTION 093000

SECTION 095113 - ACOUSTICAL PANEL CEILINGS

PART 1 - GENERAL

1.1 RELATED DOCUMENTS

A. Drawings and general provisions of the Contract, including General and Supplementary Conditions and Division 01 Specification Sections, apply to this Section.

1.2 SUMMARY

A. Section includes acoustical panels and exposed suspension systems for ceilings.

B. Products furnished, but not installed under this Section, include anchors, clips, and other ceiling attachment devices to be cast in concrete.

1.3 ACTION SUBMITTALS

A. Product Data: For each type of product.

B. Samples: For each exposed product and for each color and texture specified, 6 inches in size.

1.4 INFORMATIONAL SUBMITTALS

A. Coordination Drawings: Reflected ceiling plans, drawn to scale, on which the following items are shown and coordinated with each other, using input from installers of the items involved:

1. Suspended ceiling components.
2. Structural members to which suspension systems will be attached.
3. Size and location of initial access modules for acoustical panels.
4. Items penetrating finished ceiling including the following:

    a. Lighting fixtures.
    b. Air outlets and inlets.
    c. Speakers.
    d. Sprinklers.
    e. Access panels.

5. Perimeter moldings.

B. Product Test Reports: For each acoustical panel ceiling, for tests performed by a qualified testing agency.

C. Evaluation Reports: For each acoustical panel ceiling suspension system and anchor and fastener type, from ICC-ES.

1.5 CLOSEOUT SUBMITTALS

A. Maintenance Data: For finishes to include in maintenance manuals.

1.6 MAINTENANCE MATERIAL SUBMITTALS

A. Furnish extra materials that match products installed and that are packaged with protective covering for storage and identified with labels describing contents.

1. Acoustical Ceiling Panels: Full-size panels equal to two percent (2%) of each type of quantity installed.
2. Suspension-System Components: Quantity of each exposed component equal to two percent (2%) of quantity installed.

1.7 DELIVERY, STORAGE, AND HANDLING

A. Deliver acoustical panels, suspension-system components, and accessories to Project site in original, unopened packages and store them in a fully enclosed, conditioned space where they will be protected against damage from moisture, humidity, temperature extremes, direct sunlight, surface contamination, and other causes.

B. Before installing acoustical panels, permit them to reach room temperature and a stabilized moisture content.

C. Handle acoustical panels carefully to avoid chipping edges or damaging units in any way.

1.8 FIELD CONDITIONS

A. Environmental Limitations: Do not install acoustical panel ceilings until spaces are enclosed and weatherproof, wet work in spaces is complete and dry, work above ceilings is complete, and ambient temperature and humidity conditions are maintained at the levels indicated for Project when occupied for its intended use.

1. Pressurized Plenums: Operate ventilation system for not less than 48 hours before beginning acoustical panel ceiling installation.

PART 2 - PRODUCTS

2.1 PERFORMANCE REQUIREMENTS

A. Seismic Performance: Acoustical ceiling shall withstand the effects of earthquake motions determined according to ASCE/SEI 7.

B. Surface-Burning Characteristics: Comply with ASTM E 84; testing by a qualified testing agency. Identify products with appropriate markings of applicable testing agency.

1. Flame-Spread Index: Comply with ASTM E 1264 for Class A materials.
2. Smoke-Developed Index: 50 or less.

2.2 ACOUSTICAL PANELS, GENERAL

A. Source Limitations:

1. Acoustical Ceiling Panel: Obtain each type from single source from single manufacturer.
2. Suspension System: Obtain each type from single source from single manufacturer.

B. Acoustical Panel Standard: Provide manufacturer's standard panels of configuration indicated that comply with ASTM E 1264 classifications as designated by types, patterns, acoustical ratings, and light reflectances unless otherwise indicated.

1. Mounting Method for Measuring NRC: Type E-400; plenum mounting in which face of test specimen is 15¾ inches away from test surface according to ASTM E 795.

C. Acoustical Panel Colors and Patterns: Match appearance characteristics indicated for each product type.

1. Where appearance characteristics of acoustical panels are indicated by referencing pattern designations in ASTM E 1264 and not manufacturers' proprietary product designations, provide products selected by Architect from each manufacturer's full range that comply with requirements indicated for type, pattern, color, light reflectance, acoustical performance, edge detail, and size.

2.3 ACOUSTICAL PANEL MANUFACTURERS

A. Manufacturers: Subject to compliance with requirements, available manufacturers offering products that may be incorporated into the Work include, but are not limited to, the following:

1. Armstrong World Industries, Inc.
2. CertainTeed Corp.
3. Decoustics
4. USG Interiors, Inc.; Subsidiary of USG Corporation
5. Substitutions: Under provisions of Section 012500 “Substitution Procedures”.

2.4 ACOUSTICAL PANELS

A. Basis-of-Design Product (**ACT-1**):

1. Armstrong World Industries, Inc.; **Ultima**
2. Classification: Provide panels complying with ASTM E 1264 for type, form, and pattern as follows:

   a. Type and Form: Type IV, mineral base with membrane-faced overlay; Form 2, water felted; with vinyl overlay on face, back, and sealed edges.
   b. Pattern: E (lightly textured).

3. LR: Not less than 0.88.
4. NRC: Not less than 0.75.
5. Thickness: ¾-inch.
6. Color, Edge/Joint Detail, and Modular Size: As indicated in Section 090000 “Schedule of Finishes”.

B. Basis-of-Design Product (**ACT-2**):

1. Armstrong World Industries, Inc.; **Ultima Health Zone**
2. Classification: Provide panels complying with ASTM E 1264 for type, form, and pattern as follows:

a. Type and Form: Type IV, mineral base with membrane-faced overlay; Form 2, water felted; with vinyl overlay on face, back, and sealed edges.

3. LR: Not less than 0.86.
4. NRC: Not less than 0.70.
5. CAC: Not less than 38.
6. Thickness: ¾-inch.
7. Color, Edge/Joint Detail, and Modular Size: As indicated in Section 090000 “Schedule of Finishes”.

C. Broad Spectrum Antimicrobial Fungicide and Bactericide Treatment: Provide acoustical panels treated with manufacturer's standard antimicrobial formulation that inhibits fungus, mold, mildew, and gram-positive and gram-negative bacteria and showing no mold, mildew, or bacterial growth when tested according to ASTM D 3273 and evaluated according to ASTM D 3274 or ASTM G 21.

2.5 METAL SUSPENSION SYSTEM

A. Manufacturers: Subject to compliance with requirements, available manufacturers offering products that may be incorporated into the Work include, but are not limited to, the following:

1. Armstrong World Industries, Inc.
2. CertainTeed Corp.
3. Decoustics
4. USG Interiors, Inc.; Subsidiary of USG Corporation
5. Substitutions: Under provisions of Section 012500 “Substitution Procedures”.

B. Metal Suspension-System Standard: Provide manufacturer's standard direct-hung metal suspension systems of types, structural classifications, and finishes indicated that comply with applicable requirements in ASTM C 635.

1. High-Humidity Finish: Comply with ASTM C 635 requirements for "Coating Classification for Severe Environment Performance" where high-humidity finishes are indicated.

C. Wide-Face, Double-Web, Hot-Dip Galvanized, Steel Suspension System: Main and cross runners roll formed from cold-rolled steel sheet; hot-dip galvanized according to ASTM A 653; with prefinished, cold-rolled, 15/16-inch-wide flanges.

1. Basis-of-Design Product:

a. Armstrong World Industries, Inc.; **Prelude XL 15/16-Inch Exposed Tee System**

2. Structural Classification: Heavy-duty system.
3. Face Design: Flat, flush.
4. Finish: Painted white.

2.6 ACCESSORIES

A. Attachment Devices: Size for five (5) times the design load indicated in ASTM C 635, Table 1, "Direct Hung," unless otherwise indicated. Comply with seismic design requirements.

1. Provide manufacturer's standard fasteners and hooks.

B. Wire Hangers, Braces, and Ties: Provide wires as follows:

1. Zinc-Coated, Carbon-Steel Wire: ASTM A 641, Class 1 zinc coating, soft temper.
2. Size: Select wire diameter so its stress at three (3) times hanger design load (ASTM C 635, Table 1, "Direct Hung") will be less than yield stress of wire, but provide not less than 0.106-inch-diameter wire.

C. Seismic Clips: Manufacturer's standard seismic clips designed and spaced to secure acoustical panels in place.

D. Seismic Stabilizer Bars: Manufacturer's standard perimeter stabilizers designed to accommodate seismic forces.

E. Seismic Struts: Manufacturer's standard compression struts designed to accommodate seismic forces.

2.7 METAL EDGE MOLDINGS AND TRIM

A. Manufacturers: Subject to compliance with requirements, available manufacturers offering products that may be incorporated into the Work include, but are not limited to, the following:

1. Armstrong World Industries, Inc.
2. CertainTeed Corp.
3. USG Interiors, Inc.; Subsidiary of USG Corporation
4. Substitutions: Under provisions of Division 01 Section "Substitution Procedures".

B. Roll-Formed, Sheet-Metal Edge Moldings: Type and profile indicated or, if not indicated, manufacturer's standard moldings for edges and penetrations that comply with seismic design requirements; formed from sheet metal of same material, finish, and color as that used for exposed flanges of suspension-system runners.

1. Provide manufacturer's standard edge moldings that fit acoustical panel edge details and suspension systems indicated and that match width and configuration of exposed runners unless otherwise indicated.
2. For circular penetrations of ceiling, provide edge moldings fabricated to diameter required to fit penetration exactly.

C. Extruded-Aluminum Edge Trim: Where indicated, provide manufacturer's extruded-aluminum edge trim of profile indicated or referenced by manufacturer's designations, including splice plates, corner pieces, and attachment and other clips, complying with seismic design requirements and the following:

1. Basis-of-Design Product:

a. Armstrong World Industries, Inc.; **Axiom Light Coves – Indirect Field**

2. Baked-Enamel or Powder-Coat Finish: Minimum dry film thickness of 1.5 mils. Comply with ASTM C 635 and coating manufacturer's written instructions for cleaning, conversion coating, and applying and baking finish.

2.8 ACOUSTICAL SEALANT

A. Products: Subject to compliance with requirements, available products that may be incorporated into the Work include, but are not limited to, the following:

1. Acoustical Sealant for Exposed and Concealed Joints:

   a. Pecora Corporation; **AC-20 FTR Acoustical and Insulation Sealant**
   b. USG Corporation; **SHEETROCK Acoustical Sealant**
   c. Substitutions: Under provisions of Section 012500 “Substitution Procedures”.

B. Acoustical Sealant: Manufacturer's standard sealant complying with ASTM C 834 and effective in reducing airborne sound transmission through perimeter joints and openings in building construction as demonstrated by testing representative assemblies according to ASTM E 90.

1. Exposed and Concealed Joints: Non-sag, paintable, non-staining latex sealant.
2. Acoustical sealant shall have a VOC content of 250 g/L or less when calculated according to 40 CFR 59, Subpart D (EPA Method 24).

PART 3 - EXECUTION

3.1 EXAMINATION

A. Examine substrates, areas, and conditions, including structural framing to which acoustical panel ceilings attach or abut, with Installer present, for compliance with requirements specified in this and other Sections that affect ceiling installation and anchorage and with requirements for installation tolerances and other conditions affecting performance of acoustical panel ceilings.

B. Examine acoustical panels before installation. Reject acoustical panels that are wet, moisture damaged, or mold damaged.

C. Proceed with installation only after unsatisfactory conditions have been corrected.

3.2 PREPARATION

A. Measure each ceiling area and establish layout of acoustical panels to balance border widths at opposite edges of each ceiling. Avoid using less-than-half-width panels at borders and comply with layout shown on reflected ceiling plans.

3.3 INSTALLATION

A. General: Install acoustical panel ceilings to comply with ASTM C 636 and seismic design requirements indicated, according to manufacturer's written instructions and CISCA's "Ceiling Systems Handbook."

B. Suspend ceiling hangers from building's structural members and as follows:

1. Install hangers plumb and free from contact with insulation or other objects within ceiling plenum that are not part of supporting structure or of ceiling suspension system.

2. Splay hangers only where required to miss obstructions; offset resulting horizontal forces by bracing, countersplaying, or other equally effective means.
3. Where width of ducts and other construction within ceiling plenum produces hanger spacings that interfere with location of hangers at spacings required to support standard suspension-system members, install supplemental suspension members and hangers in form of trapezes or equivalent devices.
4. Secure wire hangers to ceiling-suspension members and to supports above with a minimum of three (3) tight turns. Connect hangers directly either to structures or to inserts, eye screws, or other devices that are secure and appropriate for substrate and that will not deteriorate or otherwise fail due to age, corrosion, or elevated temperatures.
5. When steel framing does not permit installation of hanger wires at spacing required, install carrying channels or other supplemental support for attachment of hanger wires.
6. Do not attach hangers to steel roof deck. Attach hangers to structural members.
7. Space hangers not more than 48 inches o.c. along each member supported directly from hangers unless otherwise indicated; provide hangers not more than 8 inches from ends of each member.
8. Size supplemental suspension members and hangers to support ceiling loads within performance limits established by referenced standards and publications.

C. Secure bracing wires to ceiling suspension members and to supports with a minimum of four (4) tight turns. Suspend bracing from building's structural members as required for hangers, without attaching to permanent metal forms, steel deck, or steel deck tabs. Fasten bracing wires into concrete with cast-in-place or post-installed anchors.

D. Install edge moldings and trim of type indicated at perimeter of acoustical ceiling area and where necessary to conceal edges of acoustical panels.

1. Apply acoustical sealant in a continuous ribbon concealed on back of vertical legs of moldings before they are installed.
2. Screw attach moldings to substrate at intervals not more than 16 inches o.c. and not more than 3 inches from ends, leveling with ceiling suspension system to a tolerance of 1/8-inch in 12 feet. Miter corners accurately and connect securely.
3. Do not use exposed fasteners, including pop rivets, on moldings and trim.

E. Install suspension-system runners so they are square and securely interlocked with one another. Remove and replace dented, bent, or kinked members.

F. Install acoustical panels with undamaged edges and fit accurately into suspension-system runners and edge moldings. Scribe and cut panels at borders and penetrations to provide precise fit.

1. For square-edged panels, install panels with edges fully hidden from view by flanges of suspension-system runners and moldings.
2. Paint cut edges of panel remaining exposed after installation; match color of exposed panel surfaces using coating recommended in writing for this purpose by acoustical panel manufacturer.
3. Protect lighting fixtures and air ducts to comply with requirements indicated for fire-resistance-rated assembly.

3.4 CLEANING

A. Clean exposed surfaces of acoustical panel ceilings, including trim, edge moldings, and suspension-system members. Comply with manufacturer's written instructions for cleaning and touchup of minor finish damage. Remove and replace ceiling components that cannot be successfully cleaned and repaired to permanently eliminate evidence of damage.

END OF SECTION 095113

SECTION 096513 - RESILIENT BASE AND ACCESSORIES

PART 1 - GENERAL

1.1 RELATED DOCUMENTS

A. Drawings and general provisions of the Contract, including General and Supplementary Conditions and Division 01 Specification Sections, apply to this Section.

1.2 SUMMARY

A. Section Includes:

1. Resilient base.
2. Resilient molding accessories.
3. Metal edge strips.

1.3 ACTION SUBMITTALS

A. Product Data: For each type of product.

B. Samples: For each exposed product and for each color and texture specified, not less than 12 inches long.

C. Product Schedule: For resilient base and accessory products. Use same designations indicated on Drawings.

1.4 MAINTENANCE MATERIAL SUBMITTALS

A. Furnish extra materials that match products installed and that are packaged with protective covering for storage and identified with labels describing contents.

1. Furnish not less than 10 linear feet for every 500 linear feet or fraction thereof, of each type, color, pattern, and size of resilient product installed.

1.5 DELIVERY, STORAGE, AND HANDLING

A. Store resilient products and installation materials in dry spaces protected from the weather, with ambient temperatures maintained within range recommended by manufacturer, but not less than 50 deg F or more than 90 deg F.

1.6 FIELD CONDITIONS

A. Maintain ambient temperatures within range recommended by manufacturer, but not less than 70 deg F or more than 95 deg F, in spaces to receive resilient products during the following time periods:

1. 48 hours before installation.
2. During installation.
3. 48 hours after installation.

B. After installation and until Substantial Completion, maintain ambient temperatures within range recommended by manufacturer, but not less than 55 deg F or more than 95 deg F.

C. Install resilient products after other finishing operations, including painting, have been completed.

1.7 WARRANTY

A. Provide manufacturer's written limited warranties against defects in materials and against premature wear prior to warranty expiration for the materials as follows:

1. Resilient Base: Two (2) years.

PART 2 - PRODUCTS

2.1 REGULATORY REQUIREMENTS

A. Conform to Class I rating with a flame spread of 0 to 25 in accordance with the requirements of Class A material in accordance with ASTM E 84. Rubber products shall be Class I, 0.45 watts/sq. cm in accordance with ASTM E 648 and NFPA 255.

2.2 THERMOPLASTIC-RUBBER BASE

A. Basis of Design:

1. Flexco, Corporation; **Base 2000**

B. Manufacturers: Subject to compliance with requirements, available manufacturers offering products that may be incorporated into the Work include, but are not limited to, the following:

1. Burke Mercer Flooring Products, Division of Burke Industries Inc.
2. Johnsonite; a Tarkett Company
3. Mannington Mills, Inc.
4. Roppe Corporation, USA
5. Substitutions: Under provisions of Section 012500 “Substitution Procedures”.

C. Product Standard: ASTM F 1861, Type TP (rubber, thermoplastic).

1. Group: II (layered).
2. Style:

a. B, Cove.

D. Outside and Inside Corners: Preformed.

E. Thickness, Height, Length and Colors: **RB**, as indicated in Section 090000 “Schedule of Finishes”.

2.3 RUBBER MOLDING ACCESSORY

A. Basis-of-Design:

1. Johnsonite; A Tarkett Company

B. Manufacturers: Subject to compliance with requirements, available manufacturers offering products that may be incorporated into the Work include, but are not limited to, the following:

1. Burke Mercer Flooring Products, Division of Burke Industries Inc.
2. Roppe Corporation, USA.
3. Substitutions: Under provisions of Section 012500 "Substitution Procedures".

C. Description: Rubber transitions strips, moldings, edge guards and reducers.

D. Profile and Dimensions: As indicated on Drawings and as required for installation.

E. Locations: Provide rubber molding accessories in areas indicated and where required.

F. Colors and Patterns: **FTS-2**, **-3**, and **-5**, as indicated in Section 090000 "Schedule of Finishes".

2.4 METAL EDGE STRIPS

A. Metal Edge Strips: Height to match tile thickness, metallic or combination of metal and PVC or neoprene base, exposed-edge material.

1. Basis-of-Design Product:

a. Schluter Systems L.P.; **VINPRO T**

2. Manufacturers: Subject to compliance with requirements, available manufacturers offering products that may be incorporated into the Work include, but are not limited to, the following:

a. Blanke Corporation
b. Ceramic Tool Company, Inc.
c. Profilitec Corp.
d. Substitutions: Under provisions of Section 012500 "Substitution Procedures".

3. Width and Color: **FTS-4**, as indicated in Section 090000 "Schedule of Finishes".

2.5 INSTALLATION MATERIALS

A. Trowelable Leveling and Patching Compounds: Latex-modified, Portland cement based or blended hydraulic-cement-based formulation provided or approved by resilient-product manufacturer for applications indicated.

B. Adhesives: Water-resistant type recommended by resilient-product manufacturer for resilient products and substrate conditions indicated.

PART 3 - EXECUTION

3.1 EXAMINATION

A. Examine substrates, with Installer present, for compliance with requirements for maximum moisture content and other conditions affecting performance of the Work.

1. Verify that finishes of substrates comply with tolerances and other requirements specified in other Sections and that substrates are free of cracks, ridges, depressions, scale, and foreign deposits that might interfere with adhesion of resilient products.

B. Proceed with installation only after unsatisfactory conditions have been corrected.

1. Installation of resilient products indicates acceptance of surfaces and conditions.

3.2 PREPARATION

A. Prepare substrates according to manufacturer's written instructions to ensure adhesion of resilient products.

B. Fill cracks, holes, and depressions in substrates with trowelable leveling and patching compound; remove bumps and ridges to produce a uniform and smooth substrate.

C. Do not install resilient products until they are the same temperature as the space where they are to be installed.

1. At least 48 hours in advance of installation, move resilient products and installation materials into spaces where they will be installed.

D. Immediately before installation, sweep and vacuum clean substrates to be covered by resilient products.

3.3 RESILIENT BASE INSTALLATION

A. Comply with manufacturer's written instructions for installing resilient base.

B. Apply resilient base to walls, columns, pilasters, casework and cabinets in toe spaces, and other permanent fixtures in rooms and areas where base is required.

C. Install resilient base in lengths as long as practical without gaps at seams and with tops of adjacent pieces aligned.

D. Tightly adhere resilient base to substrate throughout length of each piece, with base in continuous contact with horizontal and vertical substrates.

E. Do not stretch resilient base during installation.

F. Preformed Corners: Install preformed corners before installing straight pieces.

3.4 RESILIENT ACCESSORY INSTALLATION

A. Comply with manufacturer's written instructions for installing resilient accessories.

B. Resilient Molding Accessories: Butt to adjacent materials and tightly adhere to substrates throughout length of each piece. Install reducer strips at edges of floor covering that would otherwise be exposed.

3.5 METAL EDGE STRIP INSTALLATION

A. Metal Edge Strips: Install at edges of floor tile where meeting with another flooring material and locations indicated.

3.6 CLEANING AND PROTECTION

A. Comply with manufacturer's written instructions for cleaning and protecting resilient products.

B. Perform the following operations immediately after completing resilient-product installation:

1. Remove adhesive and other blemishes from exposed surfaces.

C. Protect resilient products from mars, marks, indentations, and other damage from construction operations and placement of equipment and fixtures during remainder of construction period.

D. Cover resilient products subject to wear and foot traffic until Substantial Completion.

END OF SECTION 096513

SECTION 096516 - RESILIENT SHEET FLOORING

PART 1 - GENERAL

1.1 RELATED DOCUMENTS

A. Drawings and general provisions of the Contract, including General and Supplementary Conditions and Division 01 Specification Sections, apply to this Section.

1.2 SUMMARY

A. Section Includes:

1. Vinyl sheet flooring with backing.

1.3 ACTION SUBMITTALS

A. Product Data: For each type of product.

B. Shop Drawings: For each type of resilient sheet flooring.

1. Include sheet flooring layouts, locations of seams, edges, columns, doorways, enclosing partitions, built-in furniture, cabinets, and cutouts.
2. Show details of special patterns.

C. Samples: For each exposed product and for each color, texture, and pattern specified in manufacturer's standard size, but not less than 6-by-9-inch sections.

1. For heat-welding bead, manufacturer's standard-size Samples, but not less than 9 inches long, of each color required.

D. Welded-Seam Samples: For seamless-installation technique indicated and for each resilient sheet flooring product, color, and pattern required; with seam running lengthwise and in center of 6-by-9-inch Sample applied to a rigid backing and prepared by Installer for this Project.

E. Product Schedule: For resilient sheet flooring. Use same designations indicated on Drawings.

1.4 INFORMATIONAL SUBMITTALS

A. Qualification Data: For Installer.

1.5 CLOSEOUT SUBMITTALS

A. Maintenance Data: For each type of resilient sheet flooring to include in maintenance manuals.

1.6 MAINTENANCE MATERIAL SUBMITTALS

A. Furnish extra materials, from the same product run, that match products installed and that are packaged with protective covering for storage and identified with labels describing contents.

1. Resilient Sheet Flooring: Furnish not less than 10 linear feet for every 500 linear feet or fraction thereof, in roll form and in full roll width for each type, color, and pattern of flooring installed.

1.7 QUALITY ASSURANCE

A. Installer Qualifications: An entity that employs installers and supervisors who are competent in techniques required by manufacturer for resilient sheet flooring installation and seaming method indicated.

1. Engage an installer who employs workers for this Project who are trained or certified by resilient sheet flooring manufacturer for installation techniques required.

1.8 DELIVERY, STORAGE, AND HANDLING

A. Store resilient sheet flooring and installation materials in dry spaces protected from the weather, with ambient temperatures maintained within range recommended by manufacturer, but not less than 50 deg F (10 deg C) or more than 90 deg F (32 deg C). Store rolls upright.

1.9 FIELD CONDITIONS

A. Maintain ambient temperatures within range recommended by manufacturer, but not less than 70 deg F (21 deg C) or more than 85 deg F (29 deg C), in spaces to receive resilient sheet flooring during the following time periods:

1. 48 hours before installation.
2. During installation.
3. 48 hours after installation.

B. After installation and until Substantial Completion, maintain ambient temperatures within range recommended by manufacturer, but not less than 55 deg F (13 deg C) or more than 95 deg F (35 deg C).

C. Close spaces to traffic during resilient sheet flooring installation.

D. Close spaces to traffic for 48 hours after resilient sheet flooring installation.

E. Install resilient sheet flooring after other finishing operations, including painting, have been completed.

PART 2 - PRODUCTS

2.1 PERFORMANCE REQUIREMENTS

A. Fire-Test-Response Characteristics: For resilient sheet flooring, as determined by testing identical products according to ASTM E 648 or NFPA 253 by a qualified testing agency.

1. Critical Radiant Flux Classification: Class I, not less than 0.45 W/sq. cm.

2.2 VINYL SHEET FLOORING WITH BACKING

A. Basis-of-Design:

1. Altro USA; **Classic 25**

B. Products: Subject to compliance with requirement, available products that may be incorporated into the Work include, but are not limited to, the following:

1. Armstrong World Industries, Inc.
2. Forbo Industries, Inc.
3. Johnsonite; a Tarkett company
4. Mannington Mills, Inc.
5. Substitutions: Under provisions of Section 016310 “Equals and Substitutions”.

C. Product Standard: ASTM F 1303.

1. Type (Binder Content): Type I, minimum binder content of ninety percent (90%).
2. Wear-Layer Thickness: Grade 1.
3. Interlayer Material: None.
4. Backing Class: Class A (fibrous).

D. Wearing Surface:

1. Embossed with embedded abrasives.

a. Slip resistant with a minimum Coefficient of Friction of 0.9 (dry) and 1.0 (wet) on level surface.

E. Sheet Width: As standard with manufacturer.

F. Seamless-Installation Method: Heat welded.

G. Thickness, Color and Pattern: **SV**, as indicated in Section 090000 “Schedule of Finishes”.

2.3 INSTALLATION MATERIALS

A. Trowelable Leveling and Patching Compounds: Latex-modified, Portland cement based or blended hydraulic-cement-based formulation provided or approved by resilient sheet flooring manufacturer for applications indicated.

B. Adhesives: Water-resistant type recommended by flooring and adhesive manufacturers to suit resilient sheet flooring and substrate conditions indicated.

C. Seamless-Installation Accessories:

1. Heat-Welding Bead: Manufacturer's solid-strand product for heat welding seams.

a. Color: Match flooring.

D. Integral-Flash-Cove-Base Accessories:

1. Cove Strip: 1-inch radius provided or approved by resilient sheet flooring manufacturer.
2. Cap Strip: Square metal, vinyl, or rubber cap provided or approved by resilient sheet flooring manufacturer.
3. Corners: Metal inside and outside corners and end stops provided or approved by resilient sheet flooring manufacturer.

PART 3 - EXECUTION

3.1 EXAMINATION

A. Examine substrates, with Installer present, for compliance with requirements for maximum moisture content and other conditions affecting performance of the Work.

1. Verify that finishes of substrates comply with tolerances and other requirements specified in other Sections and that substrates are free of cracks, ridges, depressions, scale, and foreign deposits that might interfere with adhesion of resilient sheet flooring.

B. Proceed with installation only after unsatisfactory conditions have been corrected.

3.2 PREPARATION

A. Prepare substrates according to resilient sheet flooring manufacturer's written instructions to ensure adhesion of resilient sheet flooring.

B. Concrete Substrates: Prepare according to ASTM F 710.

1. Verify that substrates are dry and free of curing compounds, sealers, and hardeners.
2. Remove substrate coatings and other substances that are incompatible with adhesives and that contain soap, wax, oil, or silicone, using mechanical methods recommended by resilient sheet flooring manufacturer. Do not use solvents.
3. Alkalinity and Adhesion Testing: Perform tests recommended by resilient sheet flooring manufacturer. Proceed with installation only after substrate alkalinity falls within range on pH scale recommended by manufacturer in writing, but not less than 5 or more than 9 pH.
4. Moisture Testing: Perform tests so that each test area does not exceed 1000 sq. ft. and perform no fewer than three (3) tests in each installation area and with test areas evenly spaced in installation areas.

   a. Relative Humidity Test: Using in-situ probes, ASTM F 2170. Proceed with installation only after substrates have a maximum eighty percent (80%) relative humidity level measurement.

C. Fill cracks, holes, and depressions in substrates with trowelable leveling and patching compound; remove bumps and ridges to produce a uniform and smooth substrate.

D. Do not install resilient sheet flooring until materials are the same temperature as space where they are to be installed.

1. At least 48 hours in advance of installation, move flooring and installation materials into spaces where they will be installed.

E. Immediately before installation, sweep and vacuum clean substrates to be covered by resilient sheet flooring.

3.3 RESILIENT SHEET FLOORING INSTALLATION

A. Comply with manufacturer's written instructions for installing resilient sheet flooring.

B. Unroll resilient sheet flooring and allow it to stabilize before cutting and fitting.

C. Lay out resilient sheet flooring as follows:

1. Maintain uniformity of flooring direction.
2. Minimize number of seams; place seams in inconspicuous and low-traffic areas, at least 6 inches away from parallel joints in flooring substrates.
3. Match edges of flooring for color shading at seams.
4. Avoid cross seams.

D. Scribe and cut resilient sheet flooring to butt neatly and tightly to vertical surfaces and permanent fixtures including built-in furniture, cabinets, pipes, outlets, and door frames.

E. Extend resilient sheet flooring into toe spaces, door reveals, closets, and similar openings.

F. Maintain reference markers, holes, and openings that are in place or marked for future cutting by repeating on resilient sheet flooring as marked on substrates. Use chalk or other nonpermanent marking device.

G. Adhere resilient sheet flooring to substrates using a full spread of adhesive applied to substrate to produce a completed installation without open cracks, voids, raising and puckering at joints, telegraphing of adhesive spreader marks, and other surface imperfections.

H. Seamless Installation:

1. Heat-Welded Seams: Comply with ASTM F 1516. Rout joints and heat weld with welding bead to fuse sections permanently into a seamless flooring installation. Prepare, weld, and finish seams to produce surfaces flush with adjoining flooring surfaces.

I. Integral-Flash-Cove Base: Cove vinyl sheet flooring 6 inches up vertical surfaces. Support flooring at horizontal and vertical junction with cove strip. Butt at top against cap strip.

1. Install metal corners at inside and outside corners.

3.4 CLEANING AND PROTECTION

A. Comply with manufacturer's written instructions for cleaning and protecting resilient sheet flooring.

B. Perform the following operations immediately after completing resilient sheet flooring installation:

1. Remove adhesive and other blemishes from surfaces.
2. Sweep and vacuum surfaces thoroughly.
3. Damp-mop surfaces to remove marks and soil.

C. Protect resilient sheet flooring from mars, marks, indentations, and other damage from construction operations and placement of equipment and fixtures during remainder of construction period.

D. Cover resilient sheet flooring until Substantial Completion.

END OF SECTION 096516

SECTION 096519 - RESILIENT TILE FLOORING

PART 1 - GENERAL

1.1 RELATED DOCUMENTS

A. Drawings and general provisions of the Contract, including General and Supplementary Conditions and Division 01 Specification Sections, apply to this Section.

1.2 SUMMARY

A. Section Includes:

1. Solid vinyl floor tile.

1.3 ACTION SUBMITTALS

A. Product Data: For each type of product.

B. Shop Drawings: For each type of floor tile.

1. Include floor tile layouts, edges, columns, doorways, enclosing partitions, built-in furniture, cabinets, and cutouts.
2. Show details of special patterns.

C. Samples: Full-size units of each color and pattern of floor tile required.

D. Product Schedule: For floor tile. Use same designations indicated on Drawings.

1.4 INFORMATIONAL SUBMITTALS

A. Qualification Data: For Installer.

1.5 CLOSEOUT SUBMITTALS

A. Maintenance Data: For each type of floor tile to include in maintenance manuals.

1.6 MAINTENANCE MATERIAL SUBMITTALS

A. Furnish extra materials, from the same product run, that match products installed and that are packaged with protective covering for storage and identified with labels describing contents.

1. Floor Tile: Furnish one (1) box for every fifty (50) boxes or fraction thereof, of each type, color, and pattern of floor tile installed.

1.7 QUALITY ASSURANCE

A. Installer Qualifications: An entity that employs installers and supervisors who are competent in techniques required by manufacturer for floor tile installation and seaming method indicated.

1. Engage an installer who employs workers for this Project who are trained or certified by floor tile manufacturer for installation techniques required.

1.8 DELIVERY, STORAGE, AND HANDLING

A. Store floor tile and installation materials in dry spaces protected from the weather, with ambient temperatures maintained within range recommended by manufacturer, but not less than 50 deg F (10 deg C) or more than 90 deg F (32 deg C). Store floor tiles on flat surfaces.

1.9 FIELD CONDITIONS

A. Maintain ambient temperatures within range recommended by manufacturer, but not less than 70 deg F (21 deg C) or more than 95 deg F (35 deg C), in spaces to receive floor tile during the following time periods:

1. 48 hours before installation.
2. During installation.
3. 48 hours after installation.

B. After installation and until Substantial Completion, maintain ambient temperatures within range recommended by manufacturer, but not less than 55 deg F (13 deg C) or more than 95 deg F (35 deg C).

C. Close spaces to traffic during floor tile installation.

D. Close spaces to traffic for 48 hours after floor tile installation.

E. Install floor tile after other finishing operations, including painting, have been completed.

PART 2 - PRODUCTS

2.1 PERFORMANCE REQUIREMENTS

A. Fire-Test-Response Characteristics: For resilient floor tile, as determined by testing identical products according to ASTM E 648 or NFPA 253 by a qualified testing agency.

1. Critical Radiant Flux Classification: Class I, not less than 0.45 W/sq. cm.

2.2 SOLID VINYL FLOOR TILE

A. Basis-of-Design:

1. AHF Products; **Nod to Nature**

B. Products: Subject to compliance with requirements, available products that may be incorporated into the Work include, but are not limited to, the following:

1. Armstrong World Industries, Inc
2. Burker Flooring, a division of Burke Industries
3. Congoleum
4. Mannington Mills, Inc

5. Mohawk Group
6. Patcraft
7. Shaw Industries, Inc.
8. To Market
9. Substitutions: Under provision of Section 012500 “Substitution Procedures”.

C. Tile Standard: ASTM F 1700.

1. Class: Class III, printed film vinyl tile.
2. Type: B, embossed surface.

D. Thickness, Size, Colors, and Patterns: **LVT**, as indicated in Section 090000 “Schedule of Finishes”.

2.3 INSTALLATION MATERIALS

A. Trowelable Leveling and Patching Compounds: Latex-modified, Portland cement based or blended hydraulic-cement-based formulation provided or approved by floor tile manufacturer for applications indicated.

B. Adhesives: Water-resistant type recommended by floor tile and adhesive manufacturers to suit floor tile and substrate conditions indicated.

PART 3 - EXECUTION

3.1 EXAMINATION

A. Examine substrates, with Installer present, for compliance with requirements for maximum moisture content and other conditions affecting performance of the Work.

1. Verify that finishes of substrates comply with tolerances and other requirements specified in other Sections and that substrates are free of cracks, ridges, depressions, scale, and foreign deposits that might interfere with adhesion of floor tile.

B. Proceed with installation only after unsatisfactory conditions have been corrected.

3.2 PREPARATION

A. Prepare substrates according to floor tile manufacturer's written instructions to ensure adhesion of resilient products.

B. Concrete Substrates: Prepare according to ASTM F 710.

1. Verify that substrates are dry and free of curing compounds, sealers, and hardeners.
2. Remove substrate coatings and other substances that are incompatible with adhesives and that contain soap, wax, oil, or silicone, using mechanical methods recommended by floor tile manufacturer. Do not use solvents.
3. Alkalinity and Adhesion Testing: Perform tests recommended by floor tile manufacturer. Proceed with installation only after substrate alkalinity falls within range on pH scale recommended by manufacturer in writing, but not less than 7 or more than 10 pH.

4. Moisture Testing: Proceed with installation only after substrates pass testing according to floor tile manufacturer's written recommendations, but not less stringent than the following:

   a. Perform anhydrous calcium chloride test according to ASTM F 1869. Proceed with installation only after substrates have maximum moisture-vapor-emission rate of 3 lb. of water/1000 sq. ft. in 24 hours.
   b. Perform relative humidity test using in situ probes according to ASTM F 2170. Proceed with installation only after substrates have a maximum seventy-five percent (75%) relative humidity level.

C. Fill cracks, holes, and depressions in substrates with trowelable leveling and patching compound; remove bumps and ridges to produce a uniform and smooth substrate.

D. Do not install floor tiles until they are the same temperature as the space where they are to be installed.

   1. At least 48 hours in advance of installation, move resilient floor tile and installation materials into spaces where they will be installed.

E. Immediately before installation, sweep and vacuum clean substrates to be covered by resilient floor tile.

3.3 FLOOR TILE INSTALLATION

A. Comply with manufacturer's written instructions for installing floor tile.

B. Lay out floor tiles from center marks established with principal walls, discounting minor offsets, so tiles at opposite edges of room are of equal width. Adjust as necessary to avoid using cut widths that equal less than one-half tile at perimeter.

   1. Lay tiles in pattern of colors and sizes indicated.
   2. Lay tiles with grain running in one (1) direction.

C. Match floor tiles for color and pattern by selecting tiles from cartons in the same sequence as manufactured and packaged, if so numbered. Discard broken, cracked, chipped, or deformed tiles.

D. Scribe, cut, and fit floor tiles to butt neatly and tightly to vertical surfaces and permanent fixtures including built-in furniture, cabinets, pipes, outlets, and door frames.

E. Extend floor tiles into toe spaces, door reveals, closets, and similar openings. Extend floor tiles to center of door openings.

F. Maintain reference markers, holes, and openings that are in place or marked for future cutting by repeating on floor tiles as marked on substrates. Use chalk or other nonpermanent marking device.

G. Adhere floor tiles to flooring substrates using a full spread of adhesive applied to substrate to produce a completed installation without open cracks, voids, raising and puckering at joints, telegraphing of adhesive spreader marks, and other surface imperfections.

3.4 CLEANING AND PROTECTION

A. Comply with manufacturer's written instructions for cleaning and protecting floor tile.

B. Perform the following operations immediately after completing floor tile installation:

1. Remove adhesive and other blemishes from exposed surfaces.
2. Sweep and vacuum surfaces thoroughly.
3. Damp-mop surfaces to remove marks and soil.

C. Protect floor tile from mars, marks, indentations, and other damage from construction operations and placement of equipment and fixtures during remainder of construction period.

D. Cover floor tile until Substantial Completion.

END OF SECTION 096519

SECTION 096536 - STATIC-CONTROL RESILIENT FLOORING

PART 1 - GENERAL

1.1 RELATED DOCUMENTS

A. Drawings and general provisions of the Contract, including General and Supplementary Conditions and Division 01 Specification Sections, apply to this Section.

1.2 SUMMARY

A. Section Includes:

1. Static-dissipative, vinyl composition floor tile.

B. Related Requirements:

1. Section 096513 "Resilient Base and Accessories" for resilient base, reducer strips, and other accessories installed with static-control resilient flooring.

1.3 ACTION SUBMITTALS

A. Product Data: For each type of product.

B. Shop Drawings: For each type of static-control resilient flooring. Include floor-covering layouts, edges, columns, doorways, enclosing partitions, built-in furniture, cabinets, and cutouts.

1. Show details of special patterns.
2. Submit grounding diagram showing location of grounding strips and connections.

C. Samples: For each exposed product and for each color and texture specified in manufacturer's standard size, but not less than 6-by-9-inch sections.

D. Product Schedule: For static-control resilient flooring. Use same designations indicated on Drawings.

1.4 INFORMATIONAL SUBMITTALS

A. Qualification Data: For Installer.

B. Product Test Reports: Based on evaluation of comprehensive tests performed by a qualified testing agency, for static-control resilient flooring.

1.5 CLOSEOUT SUBMITTALS

A. Maintenance Data: For each type of static-control resilient flooring to include in maintenance manuals.

1.6 MAINTENANCE MATERIAL SUBMITTALS

A. Furnish extra materials that match products installed and that are packaged with protective covering for storage and identified with labels describing contents.

1. Floor Tile: Furnish one (1) box for every fifty (50) boxes or fraction thereof, of each type, color, and pattern of floor tile installed.

1.7 QUALITY ASSURANCE

A. Installer Qualifications: A qualified installer who employs workers for this Project who are competent in techniques required by manufacturer for static-control resilient flooring.

1. Engage an installer who employs workers for this Project who are trained or certified by manufacturer for installation techniques required.

1.8 DELIVERY, STORAGE, AND HANDLING

A. Store static-control resilient flooring and installation materials in dry spaces protected from the weather, with ambient temperatures maintained within range recommended by manufacturer but not less than 50 deg F (10 deg C) or more than 90 deg F (32 deg C).

1. Floor Tile: Store on flat surfaces.

1.9 PROJECT CONDITIONS

A. Maintain ambient temperatures within range recommended by manufacturer, but not less than 70 deg F (21 deg C) or more than 85 deg F (29 deg C), in spaces to receive static-control resilient flooring during the following time periods:

1. 48 hours before installation.
2. During installation.
3. 48 hours after installation.

B. Until Substantial Completion, maintain ambient temperatures within range recommended by manufacturer, but not less than 55 deg F (13 deg C) or more than 95 deg F (35 deg C).

C. Close spaces to traffic during static-control resilient flooring installation.

D. Close spaces to traffic for 48 hours after static-control resilient flooring installation.

E. Install static-control resilient flooring after other finishing operations, including painting, have been completed.

PART 2 - PRODUCTS

2.1 PERFORMANCE REQUIREMENTS

A. Static-Dissipative Properties: Provide static-control resilient flooring with static-control properties indicated as determined by testing identical products per test method indicated by an independent testing and inspecting agency.

1. Electrical Resistance: Test per ASTM F 150 with 100-V applied voltage.

    a. Average greater than 1 megohm and less than or equal to 1000 megohms when test specimens are tested surface to ground.
    b. Average greater than 1 megohm and less than or equal to 1000 megohms when installed floor coverings are tested surface to ground.

B. Fire-Test-Response Characteristics: As determined by testing identical products according to ASTM E 648 or NFPA 253 by a qualified testing agency.

1. Critical Radiant Flux Classification: Class I, not less than 0.45 W/sq. cm.

2.2 STATIC-DISSIPATIVE RESILIENT FLOOR COVERINGS

A. Static-Dissipative, Vinyl Composition Floor Tile: ASTM F 1066 (vinyl composition floor tile, non-asbestos formulated), Class 2 (through-pattern tile).

1. Basis of Design:

    a. Armstrong World Industries, Inc. **EXCELON SDT**

2. Products: Subject to compliance with requirements, available products that may be incorporated into the Work include, but are not limited to, the following:

    a. Johnsonite, a Tarkett company
    b. Substitutions: Under provision of Section 012500 “Substitution Procedures”.

3. Thickness, Size, Colors and Patterns: **SDF**, as indicated in Section 090000 “Schedule of Finishes”.

2.3 INSTALLATION MATERIALS

A. Trowelable Leveling and Patching Compounds: Latex-modified Portland cement or blended hydraulic-cement-based formulation provided or approved by manufacturer for applications indicated.

B. Static-Control Adhesive: Provided or approved by manufacturer; type that maintains electrical continuity of floor-covering system to ground connection.

C. Grounding Strips: Provided or approved by manufacturer; type and size that maintains electrical continuity of floor-covering system to ground connection.

D. Floor Polish: Provide protective, static-control liquid floor polish products as recommended by floor-covering manufacturer.

PART 3 - EXECUTION

3.1 EXAMINATION

A. Examine substrates, with Installer present, for compliance with requirements for maximum moisture content and other conditions affecting performance of the Work.

B. Verify that finishes of substrates comply with tolerances and other requirements specified in other Sections and that substrates are free of cracks, ridges, depressions, scale, and foreign deposits that might interfere with adhesion or static-control characteristics of floor coverings.

C. Proceed with installation only after unsatisfactory conditions have been corrected.

3.2 PREPARATION

A. Prepare substrates according to manufacturer's written instructions to ensure adhesion of static-control resilient flooring and electrical continuity of floor-covering systems.

B. Concrete Substrates: Prepare according to ASTM F 710.

1. Verify that substrates are dry and free of curing compounds, sealers, and hardeners.
2. Remove substrate coatings and other substances that are incompatible with floor-covering adhesives and that contain soap, wax, oil, or silicone, using mechanical methods recommended by manufacturer. Do not use solvents.
3. Alkalinity and Adhesion Testing: Perform tests recommended in writing by manufacturer. Proceed with installation only after substrate alkalinity is not less than 6 or more than 8 pH unless otherwise recommended in writing by flooring manufacturer.
4. Moisture Testing: Perform tests so that each test area does not exceed 200 sq. ft. and perform no fewer than three (3) tests in each installation area and with test areas evenly spaced in installation areas.

a. Perform relative humidity test using in situ probes according to ASTM F 2170. Proceed with installation only after substrates have a maximum eighty-five percent (85%) relative humidity level.

C. Fill cracks, holes, and depressions in substrates with trowelable leveling and patching compound and remove bumps and ridges to produce a uniform and smooth substrate.

D. Do not install static-control resilient flooring until it is same temperature as space where it is to be installed.

1. Move static-control resilient flooring and installation materials into spaces where they will be installed at least 48 hours in advance of installation.

E. Sweep and vacuum substrates to be covered by static-control resilient flooring immediately before installation.

3.3 INSTALLATION, GENERAL

A. Install static-control resilient flooring according to manufacturer's written instructions.

B. Extend grounding strips beyond perimeter of static-control resilient floor-covering surfaces to ground connections.

1. For adhesively installed flooring, embed grounding strips in static-control adhesive.

C. Scribe, cut, and fit static-control resilient flooring to butt neatly and tightly to vertical surfaces and permanent fixtures including built-in furniture, cabinets, pipes, outlets, and door frames.

1. Extend static-control resilient flooring below built-in items and permanent, but movable, items that allow for a flexible layout where indicated on Drawings.

D. Extend static-control resilient flooring into toe spaces, door reveals, closets, and similar openings.

E. Extend static-control resilient flooring to center of door openings where flooring or color transitions occur.

F. Maintain reference markers, holes, and openings that are in place or marked for future cutting by repeating on static-control resilient flooring as marked on substrates. Use chalk or other nonpermanent, non-staining marking device.

G. Adhesive Installation: Adhere static-control resilient flooring to substrates using a full spread of static-control adhesive applied to substrate to produce a completed installation without open cracks, voids, raising and puckering at joints, telegraphing of adhesive spreader marks, and other surface imperfections.

3.4 FLOOR-TILE INSTALLATION

A. Comply with manufacturer's written instructions for installing floor tile.

B. Lay out floor tiles from center marks established with principal walls, discounting minor offsets, so floor tiles at opposite edges of room are of equal width. Adjust as necessary to avoid using cut widths that equal less than one-half floor tile at perimeter.

1. Lay floor tiles square with room axis.

C. Match floor tiles for color and pattern by selecting floor tiles from cartons in same sequence as manufactured and packaged if so numbered. Discard broken, cracked, chipped, or deformed floor tiles.

1. Lay static-dissipative, vinyl composition floor tiles with grain direction alternating in adjacent floor tiles (basket-weave pattern).

3.5 CLEANING AND PROTECTION

A. Comply with manufacturer's written instructions for cleaning and protection of static-control resilient flooring.

B. Perform the following operations immediately after completing static-control resilient flooring:

1. Remove static-control adhesive from exposed surfaces.
2. Remove dirt and blemishes from exposed surfaces.
3. Sweep and vacuum surfaces thoroughly.
4. Damp-mop surfaces to remove marks and soil.

C. Protect static-control resilient flooring from mars, marks, indentations, and other damage from construction operations and placement of equipment and fixtures during remainder of construction period.

1. If recommended in writing by manufacturer, apply protective static-control floor polish formulated to maintain or enhance floor covering's electrical properties; ensure static-control resilient flooring surfaces are free from soil, static-control adhesive, and surface blemishes.

    a. Verify that both floor polish and its application method are approved by manufacturer and that floor polish will not leave an insulating film that reduces static-control resilient flooring's effectiveness for static control.

D. Cover static-control resilient flooring until Substantial Completion.

END OF SECTION 096536

SECTION 096566 - RESILIENT ATHLETIC FLOORING

PART 1 - GENERAL

1.1 RELATED DOCUMENTS

A. Drawings and general provisions of the Contract, including General and Supplementary Conditions and Division 01 Specification Sections, apply to this Section.

1.2 SUMMARY

A. Section Includes:

1. Rubber floor tile.

B. Related Requirements:

1. Section 096513 "Resilient Base and Accessories" for wall base and accessories installed with resilient athletic flooring.

1.3 ACTION SUBMITTALS

A. Product Data: For each type of product.

B. Samples: For each exposed product and for each type, color, and pattern specified, 6-inch-square in size and of the same thickness indicated for the Work.

1.4 CLOSEOUT SUBMITTALS

A. Maintenance Data: For resilient athletic flooring to include in maintenance manuals.

1.5 MAINTENANCE MATERIAL SUBMITTALS

A. Furnish extra materials, from the same product run, that match products installed and that are packaged with protective covering for storage and identified with labels describing contents.

1. Floor Tile: Furnish no fewer than one (1) box for each fifty (50) boxes or fraction thereof, of each type, color, pattern, and size of floor tile installed.

1.6 DELIVERY, STORAGE, AND HANDLING

A. Deliver materials in original packages and containers, with seals unbroken, bearing manufacturer's labels indicating brand name and directions for storing.

B. Store materials to prevent deterioration.

1. Store tiles on flat surfaces.

1.7 FIELD CONDITIONS

A. Adhesively Applied Products:

1. Maintain temperatures during installation within range recommended in writing by manufacturer, but not less than 65 deg F (21 deg C) or more than 95 deg F (35 deg C), in spaces to receive flooring 48 hours before installation, during installation, and 48 hours after installation unless longer period is recommended in writing by manufacturer.
2. After post-installation period, maintain temperatures within range recommended in writing by manufacturer, but not less than 65 deg F (13 deg C) or more than 95 deg F (35 deg C).
3. Close spaces to traffic during flooring installation.
4. Close spaces to traffic for 48 hours after flooring installation unless manufacturer recommends longer period in writing.

B. Install flooring after other finishing operations, including painting, have been completed.

PART 2 - PRODUCTS

2.1 RUBBER FLOOR TILE

A. Basis-of-Design:

1. Tarkett North America; **Inertial Multi-Functional & Sports Rubber Tile**

B. Products: Subject to compliance with requirement, available products that may be incorporated into the Work include, but are not limited to, the following:

1. Ecore International
2. Roppe Corporation
3. Substitutions: Under provisions of Section 012500 “Substitution Procedures”.

C. Description: Athletic flooring consisting of modular rubber tiles with smooth edges for adhered application.

D. Material: Rubber wear layer and rubber shock-absorbent layer, vulcanized together.

E. Traffic-Surface Texture: Textured.

F. Size, Thickness, Color, and Pattern: **RSF**, as indicated in Section 090000 “Schedule of Finishes”.

2.2 ACCESSORIES

A. Trowelable Leveling and Patching Compound: Latex-modified, hydraulic-cement-based formulation approved by flooring manufacturer.

B. Adhesives: Water-resistant type recommended in writing by manufacturer for substrate and conditions indicated.

PART 3 - EXECUTION

3.1 EXAMINATION

A. Examine substrates, with Installer present, for compliance with requirements for installation tolerances, moisture content, and other conditions affecting performance of the Work.

1. Verify that finishes of substrates comply with tolerances and other requirements specified in other Sections and that substrates are free of cracks, ridges, depressions, scale, and foreign deposits that might interfere with adhesion of resilient products.

B. Proceed with installation only after unsatisfactory conditions have been corrected.

3.2 PREPARATION

A. Prepare substrates according to manufacturer's written instructions to ensure adhesion of flooring.

B. Concrete Substrates: Prepare according to ASTM F710.

1. Verify that substrates are dry and free of curing compounds, sealers, and hardeners.
2. Alkalinity Testing: Perform pH testing according to ASTM F 710. Proceed with installation only if pH readings are not less than 7.0 and not greater than 8.5.
3. Moisture Testing: Perform tests so that each test area does not exceed 1000 sq. ft. and perform no fewer than three (3) tests in each installation area and with test areas evenly spaced in installation areas.

   a. Anhydrous Calcium Chloride Test: ASTM F 1869. Proceed with installation only after substrates have maximum moisture-vapor-emission rate of 7 lbs. of water/1000 sq. ft. in 24 hours.
   b. Relative Humidity Test: Using in-situ probes, ASTM F2170. Proceed with installation only after substrates have a maximum eighty-five percent (85%) relative humidity level measurement.

C. Remove substrate coatings and other substances that are incompatible with adhesives and that contain soap, wax, oil, or silicone, using mechanical methods recommended in writing by manufacturer. Do not use solvents.

D. Use trowelable leveling and patching compound to fill cracks, holes, and depressions in substrates.

E. Move flooring and installation materials into spaces where they will be installed at least 48 hours in advance of installation unless manufacturer recommends a longer period in writing.

1. Do not install flooring until it is the same temperature as space where it is to be installed.

F. Sweep and vacuum clean substrates to be covered by flooring immediately before installation. After cleaning, examine substrates for moisture, alkaline salts, carbonation, and dust. Proceed with installation only after unsatisfactory conditions have been corrected.

3.3 FLOORING INSTALLATION, GENERAL

A. Comply with manufacturer's written installation instructions.

B. Scribe, cut, and fit flooring to butt neatly and tightly to vertical surfaces, equipment anchors, floor outlets, and other interruptions of floor surface.

C. Extend flooring into toe spaces, door reveals, closets, and similar openings unless otherwise indicated.

D. Maintain reference markers, holes, and openings that are in place or marked for future cutting by repeating subfloor markings on flooring. Use nonpermanent, non-staining marking device.

3.4 FLOOR TILE INSTALLATION

A. Lay out tiles from center marks established with principal walls, discounting minor offsets, so tiles at opposite edges of room are of equal width. Adjust as necessary to avoid using cut widths that equal less than one-half tile at perimeter.

1. Lay tiles square with room axis.

B. Discard broken, cracked, chipped, or deformed tiles.

C. Tile Matching: Match tiles for color and pattern by selecting tiles from cartons in same sequence as manufactured and packaged if so numbered.

D. Adhered Floor Tile: Adhere products to substrates using a full spread of adhesive applied to substrate to comply with adhesive and flooring manufacturers' written instructions, including those for trowel notching, adhesive mixing, and adhesive open and working times.

1. Provide completed installation without open cracks, voids, raising and puckering at joints, telegraphing of adhesive spreader marks, and other surface imperfections.

3.5 CLEANING AND PROTECTION

A. Perform the following operations immediately after completing flooring installation:

1. Remove adhesive and other blemishes from flooring surfaces.
2. Sweep and vacuum flooring thoroughly.
3. Damp-mop flooring to remove marks and soil after time period recommended in writing by manufacturer.

B. Protect flooring from mars, marks, indentations, and other damage from construction operations and placement of equipment and fixtures during remainder of construction period. Use protection methods recommended in writing by manufacturer.

1. Do not move heavy and sharp objects directly over flooring. Protect flooring with plywood or hardboard panels to prevent damage from storing or moving objects over flooring.

END OF SECTION 096566

SECTION 096813 - TILE CARPETING

PART 1 - GENERAL

1.1 RELATED DOCUMENTS

A. Drawings and general provisions of the Contract, including General and Supplementary Conditions and Division 01 Specification Sections, apply to this Section.

1.2 SUMMARY

A. Section includes modular carpet tile.

B. Related Requirements:

1. Section 096513 "Resilient Base and Accessories" for resilient wall base and accessories installed with carpet tile.

1.3 PREINSTALLATION MEETINGS

A. Preinstallation Conference: Conduct conference at Project site.

1. Review methods and procedures related to carpet tile installation including, but not limited to, the following:

   a. Review delivery, storage, and handling procedures.
   b. Review ambient conditions and ventilation procedures.
   c. Review subfloor preparation procedures.

1.4 ACTION SUBMITTALS

A. Product Data: For each type of product.

1. Include manufacturer's written data on physical characteristics, durability, and fade resistance.
2. Include installation recommendations for each type of substrate.

B. Shop Drawings: For carpet tile installation, plans showing the following:

1. Columns, doorways, enclosing walls or partitions, built-in cabinets, and locations where cutouts are required in carpet tiles.
2. Carpet tile type, color, and dye lot.
3. Type of subfloor.
4. Type of installation.
5. Pattern of installation.
6. Pattern type, location, and direction.
7. Pile direction.
8. Type, color, and location of insets and borders.
9. Type, color, and location of edge, transition, and other accessory strips.
10. Transition details to other flooring materials.

C. Samples: For each of the following products and for each color and texture required. Label each Sample with manufacturer's name, material description, color, pattern, and designation indicated on Drawings and in schedules.

1. Carpet Tile: Full-size Sample.
2. Exposed Edge, Transition, and Other Accessory Stripping: 12-inch-long Samples.

D. Product Schedule: For carpet tile. Use same designations indicated on Drawings.

1.5 INFORMATIONAL SUBMITTALS

A. Qualification Data: For Installer.

B. Product Test Reports: For carpet tile, for tests performed by a qualified testing agency.

C. Sample Warranty: For special warranty.

1.6 CLOSEOUT SUBMITTALS

A. Maintenance Data: For carpet tiles to include in maintenance manuals. Include the following:

1. Methods for maintaining carpet tile, including cleaning and stain-removal products and procedures and manufacturer's recommended maintenance schedule.
2. Precautions for cleaning materials and methods that could be detrimental to carpet tile.

1.7 MAINTENANCE MATERIAL SUBMITTALS

A. Furnish extra materials, from the same product run, that match products installed and that are packaged with protective covering for storage and identified with labels describing contents.

1. Carpet Tile: Full-size units equal to five percent (5%) of amount installed for each type indicated, but not less than 10 sq. yd.

1.8 QUALITY ASSURANCE

A. Installer Qualifications: An experienced installer who is certified by the International Certified Floorcovering Installers Association at the Commercial II certification level.

1.9 DELIVERY, STORAGE, AND HANDLING

A. Comply with CRI's "CRI Carpet Installation Standard."

1.10 FIELD CONDITIONS

A. Comply with CRI's "CRI Carpet Installation Standard" for temperature, humidity, and ventilation limitations.

B. Environmental Limitations: Do not deliver or install carpet tiles until spaces are enclosed and weathertight, wet work in spaces is complete and dry, and ambient temperature and humidity conditions are maintained at occupancy levels during the remainder of the construction period.

1.11 WARRANTY

A. Special Warranty for Carpet Tiles: Manufacturer agrees to repair or replace components of carpet tile installation that fail in materials or workmanship within specified warranty period.

1. Warranty does not include deterioration or failure of carpet tile due to unusual traffic, failure of substrate, vandalism, or abuse.
2. Failures include, but are not limited to, more than ten percent (10%) edge raveling, snags, runs, dimensional stability, excess static discharge, loss of tuft bind strength, loss of face fiber, and delamination.
3. Warranty Period: Limited lifetime.

PART 2 - PRODUCTS

2.1 CARPET TILE MANUFACTURERS

A. Manufacturers: Subject to compliance with requirements, available manufacturers offering products that may be incorporated into the Work include, but are not limited to, the following:

1. FLOR
2. Forbo Flooring Systems
3. Interface, Inc.
4. Mannington Commercial
5. Patcraft
6. Shaw Contract Group
7. Substitutions: Under provisions of Section 012500 “Substitution Procedures”.

2.2 CARPET TILE

A. Basis-of-Design Product (**CPT**):

1. J&J Flooring Group, LLC; **Against The Grain, Urban Avenue Collections**
2. Material Characteristics: As indicated in Section 090000 “Schedule of Finishes”.
3. Applied Treatments:

a. Soil-Resistance Treatment: Manufacturer's standard treatment.

4. Performance Characteristics:

a. Noise Reduction Coefficient (NRC): 0.30 according to ASTM C 423.
b. Colorfastness to Crocking: Not less than 4, wet and dry, according to AATCC 165.
c. Colorfastness to Light: Not less than 4 after 60 AFU (AATCC fading units) according to AATCC 16, Option E.
d. Electrostatic Propensity: Less than 3.0 kV according to AATCC 134.
e. Slip Resistance: Complies with ADA guidelines for level surface according to ASTM C 1028.

B. Basis-of-Design Product (**WOM**):

1. Tarkett North America; **Assertive Action**

2. Material Characteristics: As indicated in Section 090000 “Schedule of Finishes”.
3. Applied Treatments:

    a. Soil-Resistance Treatment: Manufacturer's standard treatment.

4. Performance Characteristics:

    a. Colorfastness to Light: Not less than 4 after 60 AFU (AATCC fading units) according to AATCC 16, Option E.
    b. Electrostatic Propensity: Less than 3.0 kV according to AATCC 134.

2.3 INSTALLATION ACCESSORIES

A. Trowelable Leveling and Patching Compounds: Latex-modified, hydraulic-cement-based formulation provided or recommended by carpet tile manufacturer.

B. Adhesives: Water-resistant, mildew-resistant, non-staining, pressure-sensitive type to suit products and subfloor conditions indicated, that complies with flammability requirements for installed carpet tile and is recommended by carpet tile manufacturer for releasable installation.

PART 3 - EXECUTION

3.1 EXAMINATION

A. Examine substrates, areas, and conditions, with Installer present, for compliance with requirements for maximum moisture content, alkalinity range, installation tolerances, and other conditions affecting carpet tile performance.

B. Examine carpet tile for type, color, pattern, and potential defects.

C. Proceed with installation only after unsatisfactory conditions have been corrected.

3.2 PREPARATION

A. General: Comply with CRI's "Carpet Installation Standards" and with carpet tile manufacturer's written installation instructions for preparing substrates indicated to receive carpet tile.

B. Use trowelable leveling and patching compounds, according to manufacturer's written instructions, to fill cracks, holes, depressions, and protrusions in substrates. Fill or level cracks, holes, and depressions 1/8-inch-wide or wider, and protrusions more than 1/32-inch unless more stringent requirements are required by manufacturer's written instructions.

C. Substrates: Remove coatings, including curing compounds, and other substances that are incompatible with adhesives and that contain soap, wax, oil, or silicone, without using solvents. Use mechanical methods recommended in writing by adhesive and carpet tile manufacturers.

D. Broom and vacuum clean substrates to be covered immediately before installing carpet tile.

3.3 INSTALLATION

A. General: Comply with CRI's "CRI Carpet Installation Standard," Section 18, "Modular Carpet" and with carpet tile manufacturer's written installation instructions.

B. Installation Method: As indicated in Section 090000 “Schedule of Finishes” and as recommended in writing by carpet tile manufacturer.

C. Maintain dye lot integrity. Do not mix dye lots in same area.

D. Maintain pile-direction patterns recommended in writing by carpet tile manufacturer.

E. Cut and fit carpet tile to butt tightly to vertical surfaces, permanent fixtures, and built-in furniture including cabinets, pipes, outlets, edgings, thresholds, and nosings. Bind or seal cut edges as recommended by carpet tile manufacturer.

F. Extend carpet tile into toe spaces, door reveals, closets, open-bottomed obstructions, removable flanges, alcoves, and similar openings.

G. Maintain reference markers, holes, and openings that are in place or marked for future cutting by repeating on finish flooring as marked on subfloor. Use nonpermanent, non-staining marking device.

H. Install pattern parallel to walls and borders.

3.4 CLEANING AND PROTECTION

A. Perform the following operations immediately after installing carpet tile:

1. Remove excess adhesive, seam sealer, and other surface blemishes using cleaner recommended by carpet tile manufacturer.
2. Remove yarns that protrude from carpet tile surface.
3. Vacuum carpet tile using commercial machine with face-beater element.

B. Protect installed carpet tile to comply with CRI's "Carpet Installation Standard," Section 20, "Protecting Indoor Installations."

C. Protect carpet tile against damage from construction operations and placement of equipment and fixtures during the remainder of construction period. Use protection methods indicated or recommended in writing by carpet tile manufacturer.

END OF SECTION 096813

SECTION 097200 - WALL COVERINGS

PART 1 - GENERAL

1.1 RELATED DOCUMENTS

A. Drawings and general provisions of the Contract, including General and Supplementary Conditions and Division 01 Specification Sections, apply to this Section.

1.2 SUMMARY

A. Section Includes:

1. Vinyl wall covering.

1.3 PREINSTALLATION MEETINGS

A. Preinstallation Conference: Conduct conference at Project site.

1.4 ACTION SUBMITTALS

A. Product Data: For each type of product.

1. Include data on physical characteristics, durability, fade resistance and fire-test-response characteristics.

B. Shop Drawings: Show location and extent of each wall-covering type. Indicate pattern placement, seams, and termination points.

C. Samples: For each type of wall covering and for each color, pattern, texture, and finish specified, full width by 36-inch-long in size.

1. Wall-Covering Sample: From same production run to be used for the Work, with specified treatments applied. Show complete pattern repeat.

a. Show complete pattern repeat.
b. Mark top and face of fabric.

D. Product Schedule: For wall coverings. Use same designations indicated on Drawings.

1.5 INFORMATIONAL SUBMITTALS

A. Product Test Reports: For each wall covering, for tests performed by a qualified testing agency.

1.6 CLOSEOUT SUBMITTALS

A. Maintenance Data: For wall coverings to include in maintenance manuals.

1.7 MAINTENANCE MATERIAL SUBMITTALS

A. Furnish extra materials, from the same product run, that match products installed and that are packaged with protective covering for storage and identified with labels describing contents.

1. Wall-Covering Materials: For each type, color, texture and finish, full width by length to equal to five percent (5%) of amount installed.

1.8 FIELD CONDITIONS

A. Environmental Limitations: Do not deliver or install wall coverings until spaces are enclosed and weathertight, wet work in spaces is complete and dry, work above ceilings is complete, and HVAC system is operating and maintaining ambient temperature and humidity conditions at levels intended for occupants after Project completion during the remainder of the construction period.

B. Lighting: Do not install wall covering until lighting that matches conditions intended for occupants after Project completion is provided on the surfaces to receive wall covering.

C. Ventilation: Provide continuous ventilation during installation and for not less than the time recommended by wall-covering manufacturer for full drying or curing.

PART 2 - PRODUCTS

2.1 PERFORMANCE REQUIREMENTS

A. Fire-Test-Response Characteristics: As determined by testing identical wall coverings applied with identical adhesives to substrates in accordance with test method indicated below by a qualified testing agency. Identify products with appropriate markings of applicable testing agency.

1. Surface-Burning Characteristics: Comply with ASTM E 84; testing by a qualified testing agency. Identify products with appropriate markings of applicable testing agency.

a. Flame-Spread Index: 25 or less.
b. Smoke-Developed Index: 50 or less.

2.2 VINYL WALL COVERING

A. Basis-of-Design Product:

1. Koroseal Interior Products, LLC

B. Manufacturers: Subject to compliance with requirements, available manufacturers offering products that may be incorporated into the Work include, but are not limited to, the following:

1. DesignTex Inc.; a Steelcase company
2. D.L. Couch
3. Level Digital Wallcoverings
4. MDC Wallcoverings
5. Wolf-Gordon, Inc.

6. Substitutions: Under provisions of Section 012500 “Substitution Procedures”.

C. Description: Provide vinyl products in rolls from same production run and complying with the following:

1. FS CCC-W-408D and CFFA-W-101-D for Type II, Medium-Duty products.
2. ASTM F 793 for strippable wall coverings.

a. Category: V, Type II, Commercial Serviceability (Vinyl Coated).

D. Total Weight: 20 ounces per linear yard, excluding coatings.

E. Width: Per manufacturer.

F. Backing: Woven fabric.

G. Colors, Textures, and Patterns: **WC**, as indicated in Section 090000 “Schedule of Finishes”.

2.3 ACCESSORIES

A. Adhesive: Mildew-resistant, non-staining, strippable adhesive, for use with specific wall covering and substrate application indicated and as recommended in writing by wall-covering manufacturer.

B. Primer/Sealer: Mildew resistant, complying with requirements in Section 099123 "Interior Painting" and recommended in writing by primer/sealer and wall-covering manufacturers for intended substrate.

C. Seam Tape: As recommended in writing by wall-covering manufacturer.

PART 3 - EXECUTION

3.1 EXAMINATION

A. Examine substrates and conditions, with Installer present, for compliance with requirements for installation surfaces being true in plane and vertical and horizontal alignment, maximum moisture content, and other conditions affecting performance of the Work.

B. Proceed with installation only after unsatisfactory conditions have been corrected.

3.2 PREPARATION

A. Comply with manufacturer's written instructions for surface preparation.

B. Clean substrates of substances that could impair bond of wall covering, including dirt, oil, grease, mold, mildew, and incompatible primers.

C. Prepare substrates to achieve a smooth, dry, clean, structurally sound surface free of flaking, unsound coatings, cracks, and defects.

D. Remove hardware and hardware accessories, electrical plates and covers, light fixture trims, and similar items.

E. Acclimatize wall-covering materials by removing them from packaging in the installation areas not less than 24 hours before installation.

3.3 INSTALLATION OF WALL COVERING

A. Comply with wall-covering manufacturers' written installation instructions applicable to products and applications indicated.

B. Cut wall-covering strips in roll number sequence. Change the roll numbers at partition breaks and corners.

C. Install strips in same order as cut from roll.

1. For solid-color, even-texture, or random-match wall coverings, reverse every other strip.

D. Install wall covering without lifted or curling edges and without visible shrinkage.

E. Trim edges and seams for color uniformity, pattern match and tight closure. Butt seams without overlaps or gaps between strips.

F. Fully bond wall covering to substrate. Remove air bubbles, wrinkles, blisters, and other defects.

3.4 CLEANING

A. Remove excess adhesive at seams, perimeter edges, and adjacent surfaces.

B. Use cleaning methods recommended in writing by wall-covering manufacturer.

C. Replace strips that cannot be cleaned.

D. Reinstall hardware and hardware accessories, electrical plates and covers, light fixture trims, and similar items.

END OF SECTION 097200

SECTION 099113 - EXTERIOR PAINTING

PART 1 - GENERAL

1.1 RELATED DOCUMENTS

A. Drawings and general provisions of the Contract, including General and Supplementary Conditions and Division 01 Specification Sections, apply to this Section.

1.2 SUMMARY

A. Section includes surface preparation and the application of paint systems on the following exterior substrates:

1. Steel and iron.
2. Galvanized metal.

1.3 DEFINITIONS

A. Gloss Level 5: 35 to 70 units at 60 degrees, according to ASTM D 523.

1.4 ACTION SUBMITTALS

A. Product Data: For each type of product. Include preparation requirements and application instructions.

B. Samples: For each type of paint system and each color and gloss of topcoat.

1. Submit Samples on rigid backing, 8 inches square.
2. Step coats on Samples to show each coat required for system.
3. Label each coat of each Sample.
4. Label each Sample for location and application area.

C. Product List: For each product indicated, include the following:

1. Cross-reference to paint system and locations of application areas. Use same designations indicated on Drawings and in schedules.
2. Printout of current "MPI Approved Products List" for each product category specified, with the proposed product highlighted.
3. VOC content.

1.5 MAINTENANCE MATERIAL SUBMITTALS

A. Furnish extra materials, from the same product run, that match products installed and that are packaged with protective covering for storage and identified with labels describing contents.

1. Paint: Five percent, (5%) but not less than 1 gal. of each material and color applied.

1.6 DELIVERY, STORAGE, AND HANDLING

A. Store materials not in use in tightly covered containers in well-ventilated areas with ambient temperatures continuously maintained at not less than 45 deg F (7 deg C).

1. Maintain containers in clean condition, free of foreign materials and residue.
2. Remove rags and waste from storage areas daily.

1.7 FIELD CONDITIONS

A. Apply paints only when temperature of surfaces to be painted and ambient air temperatures are between 50 and 95 deg F (10 and 35 deg C).

B. Do not apply paints in snow, rain, fog, or mist; when relative humidity exceeds eighty-five percent (85%); at temperatures less than 5 deg F (3 deg C) above the dew point; or to damp or wet surfaces.

PART 2 - PRODUCTS

2.1 MANUFACTURERS

A. Manufacturers: Subject to compliance with requirements, available manufacturers offering products that may be incorporated into the Work include, but are not limited to, the following:

1. Behr Process Corporation
2. Benjamin Moore & Co.
3. Duron, Inc.
4. ICI Paints
5. PPG Architectural Finishes, Inc.
6. Sherwin-Williams Company (The)
7. Substitutions: Under provisions of Section 012500 “Substitution Procedures”.

2.2 PAINT, GENERAL

A. MPI Standards: Provide products that comply with MPI standards indicated and that are listed in its "MPI Approved Products List."

B. Material Compatibility:

1. Provide materials for use within each paint system that are compatible with one another and substrates indicated, under conditions of service and application as demonstrated by manufacturer, based on testing and field experience.
2. For each coat in a paint system, provide products recommended in writing by manufacturers of topcoat for use in paint system and on substrate indicated.

C. VOC Content: Provide materials that comply with VOC limits of authorities having jurisdiction.

D. Colors: As selected by Architect and Owner from manufacturer’s entire range.

2.3 SOURCE QUALITY CONTROL

A. Testing of Paint Materials: Owner reserves the right to invoke the following procedure:

1. Owner will engage the services of a qualified testing agency to sample paint materials. Contractor will be notified in advance and may be present when samples are taken. If paint materials have already been delivered to Project site, samples may be taken at Project site. Samples will be identified, sealed, and certified by testing agency.
2. Testing agency will perform tests for compliance with product requirements.
3. Owner may direct Contractor to stop applying paints if test results show materials being used do not comply with product requirements. Contractor shall remove noncomplying paint materials from Project site, pay for testing, and repaint surfaces painted with rejected materials. Contractor will be required to remove rejected materials from previously painted surfaces if, on repainting with complying materials, the two (2) paints are incompatible.

PART 3 - EXECUTION

3.1 EXAMINATION

A. Examine substrates and conditions, with Applicator present, for compliance with requirements for maximum moisture content and other conditions affecting performance of the Work.

B. Verify suitability of substrates, including surface conditions and compatibility with existing finishes and primers.

C. Proceed with coating application only after unsatisfactory conditions have been corrected.

1. Application of coating indicates acceptance of surfaces and conditions.

3.2 PREPARATION

A. Comply with manufacturer's written instructions and recommendations in "MPI Manual" applicable to substrates and paint systems indicated.

B. Remove hardware, covers, plates, and similar items already in place that are removable and are not to be painted. If removal is impractical or impossible because of size or weight of item, provide surface-applied protection before surface preparation and painting.

1. After completing painting operations, use workers skilled in the trades involved to reinstall items that were removed. Remove surface-applied protection.

C. Clean substrates of substances that could impair bond of paints, including dust, dirt, oil, grease, and incompatible paints and encapsulants.

1. Remove incompatible primers and reprime substrate with compatible primers or apply tie coat as required to produce paint systems indicated.

D. Steel Substrates: Remove rust, loose mill scale, and shop primer if any. Clean using methods recommended in writing by paint manufacturer but not less than the following:

1. SSPC-SP 3.

E. Galvanized-Metal Substrates: Remove grease and oil residue from galvanized sheet metal by mechanical methods to produce clean, lightly etched surfaces that promote adhesion of subsequently applied paints.

3.3 APPLICATION

A. Apply paints according to manufacturer's written instructions and recommendations in "MPI Manual."

1. Use applicators and techniques suited for paint and substrate indicated.
2. Do not paint over labels of independent testing agencies or equipment name, identification, performance rating, or nomenclature plates.
3. Primers specified in painting schedules may be omitted on items that are factory primed or factory finished if acceptable to topcoat manufacturers.

B. Tint undercoats same color as topcoat but tint each undercoat a lighter shade to facilitate identification of each coat if multiple coats of same material are to be applied. Provide sufficient difference in shade of undercoats to distinguish each separate coat.

C. If undercoats or other conditions show through topcoat, apply additional coats until cured film has a uniform paint finish, color, and appearance.

D. Apply paints to produce surface films without cloudiness, spotting, holidays, laps, brush marks, roller tracking, runs, sags, ropiness, or other surface imperfections. Cut in sharp lines and color breaks.

3.4 FIELD QUALITY CONTROL

A. Dry Film Thickness Testing: Owner may engage the services of a qualified testing and inspecting agency to inspect and test paint for dry film thickness.

1. Contractor shall touch up and restore painted surfaces damaged by testing.
2. If test results show that dry film thickness of applied paint does not comply with paint manufacturer's written recommendations, Contractor shall pay for testing and apply additional coats as needed to provide dry film thickness that complies with paint manufacturer's written recommendations.

3.5 CLEANING AND PROTECTION

A. At end of each workday, remove rubbish, empty cans, rags, and other discarded materials from Project site.

B. After completing paint application, clean spattered surfaces. Remove spattered paints by washing, scraping, or other methods. Do not scratch or damage adjacent finished surfaces.

C. Protect work of other trades against damage from paint application. Correct damage to work of other trades by cleaning, repairing, replacing, and refinishing, as approved by Architect, and leave in an undamaged condition.

D. At completion of construction activities of other trades, touch up and restore damaged or defaced painted surfaces.

3.6 EXTERIOR PAINTING SCHEDULE

A. Steel and Iron Substrates:

1. Water-Based Light Industrial Coating System:

a. Prime Coat: Primer, zinc rich, inorganic, **MPI #19**.
b. Intermediate Coat: Light industrial coating, exterior, water based, matching topcoat.
c. Topcoat: Light industrial coating, exterior, water based, semi-gloss (Gloss Level 5), **MPI #163**.

B. Galvanized-Metal Substrates:

1. Water-Based Light Industrial Coating System:

a. Prime Coat: Primer, galvanized, water based**, MPI #134**.
b. Intermediate Coat: Light industrial coating, exterior, water based, matching topcoat.
c. Topcoat: Light industrial coating, exterior, water based, semi-gloss (Gloss Level 5), **MPI #163**.

END OF SECTION 099113

SECTION 099123 - INTERIOR PAINTING

PART 1 - GENERAL

1.1 RELATED DOCUMENTS

A. Drawings and general provisions of the Contract, including General and Supplementary Conditions and Division 01 Specification Sections, apply to this Section.

1.2 SUMMARY

A. Section includes surface preparation and the application of paint systems on the following interior substrates:

1. Concrete.
2. Steel and iron.
3. Galvanized metal.
4. Wood.
5. Gypsum board.

B. Related Requirements:

1. Section 099113 "Exterior Painting" for surface preparation and the application of paint systems on exterior substrates.
2. Section 099600 "High-Performance Coatings" for high-performance and special-use coatings.

1.3 DEFINITIONS

A. Gloss Level 1: Not more than 5 units at 60 degrees and 10 units at 85 degrees, according to ASTM D 523.

B. Gloss Level 3: 10 to 25 units at 60 degrees and 10 to 35 units at 85 degrees, according to ASTM D 523.

C. Gloss Level 5: 35 to 70 units at 60 degrees, according to ASTM D 523.

1.4 ACTION SUBMITTALS

A. Product Data: For each type of product. Include preparation requirements and application instructions.

1. Include Printout of current "MPI Approved Products List" for each product category specified, with the proposed product highlighted.
2. Indicate VOC content.

B. Samples: For each type of paint system and in each color and gloss of topcoat.

1. Submit Samples on rigid backing, 8 inches square.
2. Apply coats on Samples to show each coat required for system.

3. Label each coat of each Sample.
4. Label each Sample for location and application area.

C. Product List: Cross-reference to paint system and locations of application areas. Use same designations indicated on Drawings and in schedules. Include color designations.

1.5 MAINTENANCE MATERIAL SUBMITTALS

A. Furnish extra materials, from the same product run, that match products installed and that are packaged with protective covering for storage and identified with labels describing contents.

1. Paint: Five percent (5%), but not less than 1 gal. of each material and color applied.

1.6 DELIVERY, STORAGE, AND HANDLING

A. Store materials not in use in tightly covered containers in well-ventilated areas with ambient temperatures continuously maintained at not less than 45 deg F (7 deg C).

1. Maintain containers in clean condition, free of foreign materials and residue.
2. Remove rags and waste from storage areas daily.

1.7 FIELD CONDITIONS

A. Apply paints only when temperature of surfaces to be painted and ambient air temperatures are between 50 and 95 deg F (10 and 35 deg C).

B. Do not apply paints when relative humidity exceeds eighty-five percent (85%); at temperatures less than 5 deg F (3 deg C) above the dew point; or to damp or wet surfaces.

PART 2 - PRODUCTS

2.1 MANUFACTURERS

A. Manufacturers: Subject to compliance with requirements, available manufacturers offering products that may be incorporated into the Work include, but are not limited to, the following:

1. Benjamin Moore & Co.
2. ICI Paints
3. Sherwin-Williams Company (The)
4. Substitutions: Under provisions of Section 012500 “Substitution Procedures”.

2.2 PAINT, GENERAL

A. MPI Standards: Provide products that comply with MPI standards indicated and that are listed in its "MPI Approved Products List."

B. Material Compatibility:

1. Provide materials for use within each paint system that are compatible with one another and substrates indicated, under conditions of service and application as demonstrated by manufacturer, based on testing and field experience.

2. For each coat in a paint system, provide products recommended in writing by manufacturers of topcoat for use in paint system and on substrate indicated.

C. VOC Content: Products shall comply with VOC limits of authorities having jurisdiction and, for interior paints and coatings applied at Project site, the following VOC limits, exclusive of colorants added to a tint base, when calculated according to 40 CFR 59, Subpart D (EPA Method 24).

1. Flat Paints and Coatings: 50 g/L.
2. Non-Flat Paints and Coatings: 150 g/L.
3. Primers, Sealers, and Undercoaters: 200 g/L.
4. Anticorrosive and Antirust Paints Applied to Ferrous Metals: 250 g/L.
5. Zinc-Rich Industrial Maintenance Primers: 340 g/L.
6. Pretreatment Wash Primers: 420 g/L.

D. Colors: As selected by Architect and Owner from manufacturer's entire range if not specified as **PT** or **SC** in Section 090000 "Schedule of Finishes".

2.3 SOURCE QUALITY CONTROL

A. Testing of Paint Materials: Owner reserves the right to invoke the following procedure:

1. Owner will engage the services of a qualified testing agency to sample paint materials. Contractor will be notified in advance and may be present when samples are taken. If paint materials have already been delivered to Project site, samples may be taken at Project site. Samples will be identified, sealed, and certified by testing agency.
2. Testing agency will perform tests for compliance with product requirements.
3. Owner may direct Contractor to stop applying coatings if test results show materials being used do not comply with product requirements. Contractor shall remove noncomplying paint materials from Project site, pay for testing, and repaint surfaces painted with rejected materials. Contractor will be required to remove rejected materials from previously painted surfaces if, on repainting with complying materials, the two (2) paints are incompatible.

PART 3 - EXECUTION

3.1 EXAMINATION

A. Examine substrates and conditions, with Applicator present, for compliance with requirements for maximum moisture content and other conditions affecting performance of the Work.

B. Maximum Moisture Content of Substrates: When measured with an electronic moisture meter as follows:

1. Concrete: Twelve percent (12%).
2. Wood: Fifteen percent (15%).
3. Gypsum Board: Twelve percent (12%).

C. Gypsum Board Substrates: Verify that finishing compound is sanded smooth.

D. Verify suitability of substrates, including surface conditions and compatibility with existing finishes and primers.

E. Proceed with coating application only after unsatisfactory conditions have been corrected.

1. Application of coating indicates acceptance of surfaces and conditions.

3.2 PREPARATION

A. Comply with manufacturer's written instructions and recommendations in "MPI Manual" applicable to substrates indicated.

B. Remove hardware, covers, plates, and similar items already in place that are removable and are not to be painted. If removal is impractical or impossible because of size or weight of item, provide surface-applied protection before surface preparation and painting.

1. After completing painting operations, use workers skilled in the trades involved to reinstall items that were removed. Remove surface-applied protection if any.

C. Clean substrates of substances that could impair bond of paints, including dust, dirt, oil, grease, and incompatible paints and encapsulants.

1. Remove incompatible primers and reprime substrate with compatible primers or apply tie coat as required to produce paint systems indicated.

D. Concrete Substrates: Remove release agents, curing compounds, efflorescence, and chalk. Do not paint surfaces if moisture content or alkalinity of surfaces to be painted exceeds that permitted in manufacturer's written instructions.

E. Steel Substrates: Remove rust, loose mill scale, and shop primer, if any. Clean using methods recommended in writing by paint manufacturer but not less than the following:

1. SSPC-SP 3, "Power Tool Cleaning."

F. Shop-Primed Steel Substrates: Clean field welds, bolted connections, and abraded areas of shop paint, and paint exposed areas with the same material as used for shop priming to comply with SSPC-PA 1 for touching up shop-primed surfaces.

G. Galvanized-Metal Substrates: Remove grease and oil residue from galvanized sheet metal by mechanical methods to produce clean, lightly etched surfaces that promote adhesion of subsequently applied paints.

H. Wood Substrates:

1. Sand surfaces that will be exposed to view and dust off.
2. Prime edges, ends, faces, undersides, and backsides of wood.

3.3 APPLICATION

A. Apply paints according to manufacturer's written instructions and to recommendations in "MPI Manual."

1. Use applicators and techniques suited for paint and substrate indicated.
2. Paint surfaces behind movable equipment and furniture same as similar exposed surfaces. Before final installation, paint surfaces behind permanently fixed equipment or furniture with prime coat only.
3. Paint front and backsides of access panels, removable or hinged covers, and similar hinged items to match exposed surfaces.
4. Do not paint over labels of independent testing agencies or equipment name, identification, performance rating, or nomenclature plates.
5. Primers specified in painting schedules may be omitted on items that are factory primed or factory finished if acceptable to topcoat manufacturers.

B. Tint each undercoat a lighter shade to facilitate identification of each coat if multiple coats of same material are to be applied. Tint undercoats to match color of topcoat, but provide sufficient difference in shade of undercoats to distinguish each separate coat.

C. If undercoats or other conditions show through topcoat, apply additional coats until cured film has a uniform paint finish, color, and appearance.

D. Apply paints to produce surface films without cloudiness, spotting, holidays, laps, brush marks, roller tracking, runs, sags, ropiness, or other surface imperfections. Cut in sharp lines and color breaks.

E. Painting Fire Suppression, Plumbing, HVAC, Electrical, Communication, and Electronic Safety and Security Work:

1. Paint the following work where exposed in equipment rooms, unless factory-finished:

   a. Equipment, including panelboards.
   b. Uninsulated metal piping.
   c. Uninsulated plastic piping.
   d. Pipe hangers and supports.
   e. Metal conduit.
   f. Plastic conduit.
   g. Tanks that do not have factory-applied final finishes.
   h. Duct, equipment, and pipe insulation having cotton or canvas insulation covering or other paintable jacket material.

2. Paint the following work where exposed in occupied spaces, unless factory-finished:

   a. Equipment, including panelboards.
   b. Uninsulated metal piping.
   c. Uninsulated plastic piping.
   d. Pipe hangers and supports.
   e. Metal conduit.
   f. Plastic conduit.
   g. Duct, equipment, and pipe insulation having cotton or canvas insulation covering or other paintable jacket material.
   h. Other items as directed by Architect.

3. Paint portions of internal surfaces of metal ducts, without liner, behind air inlets and outlets that are visible from occupied spaces.

3.4 FIELD QUALITY CONTROL

A. Dry Film Thickness Testing: Owner may engage the services of a qualified testing and inspecting agency to inspect and test paint for dry film thickness.

1. Contractor shall touch up and restore painted surfaces damaged by testing.
2. If test results show that dry film thickness of applied paint does not comply with paint manufacturer's written recommendations, Contractor shall pay for testing and apply additional coats as needed to provide dry film thickness that complies with paint manufacturer's written recommendations.

3.5 CLEANING AND PROTECTION

A. At end of each workday, remove rubbish, empty cans, rags, and other discarded materials from Project site.

B. After completing paint application, clean spattered surfaces. Remove spattered paints by washing, scraping, or other methods. Do not scratch or damage adjacent finished surfaces.

C. Protect work of other trades against damage from paint application. Correct damage to work of other trades by cleaning, repairing, replacing, and refinishing, as approved by Architect, and leave in an undamaged condition.

D. At completion of construction activities of other trades, touch up and restore damaged or defaced painted surfaces.

3.6 INTERIOR PAINTING SCHEDULE

A. Concrete Substrates, Traffic Surfaces:

1. Water-Based Concrete Floor Sealer System:

a. First Coat: Sealer, water based, for concrete floors, matching topcoat.
b. Topcoat: Sealer, water based, for concrete floors, **MPI #99**.

B. Steel Substrates:

1. Latex System, Alkyd Primer:

a. Prime Coat: Primer, alkyd, quick dry, for metal, **MPI #76**.
b. Intermediate Coat: Latex, interior, matching topcoat.
c. Topcoat: Latex, interior, semi-gloss (Gloss Level 5), **MPI #54**.

C. Galvanized-Metal Substrates:

1. Latex System:

a. Prime Coat: Primer, galvanized, water based, **MPI #134**.
b. Intermediate Coat: Latex, interior, matching topcoat.
c. Topcoat: Latex, interior, semi-gloss (Gloss Level 5), **MPI #54**.

D. Wood Substrates:

1. Latex over Latex Primer System:

    a. Prime Coat: Primer, latex, for interior wood, **MPI #39**.
    b. Topcoat: Latex, interior, semi-gloss (Gloss Level 5), **MPI #54**.

E. Gypsum Board Substrates:

1. Latex System:

    a. Prime Coat: Primer sealer, latex, interior, **MPI #50**.
    b. Intermediate Coat: Latex, interior, matching topcoat.
    c. Topcoat: Latex, interior, flat, (Gloss Level 1), **MPI #53**, at ceilings.
    d. Topcoat: Latex, interior, eggshell, (Gloss Level 3), **MPI #52**.

END OF SECTION 099123

SECTION 099300 - STAINING AND TRANSPARENT FINISHING

PART 1 - GENERAL

1.1 RELATED DOCUMENTS

A. Drawings and general provisions of the Contract, including General and Supplementary Conditions and Division 01 Specification Sections, apply to this Section.

1.2 SUMMARY

A. Section includes surface preparation and application of wood finishes.

1.3 DEFINITIONS

A. Gloss Level 4: 20 to 35 units at 60 degrees and not less than 35 units at 85 degrees, according to ASTM D 523.

1.4 ACTION SUBMITTALS

A. Product Data: For each type of product. Include preparation requirements and application instructions.

1. Include printout of current "MPI Approved Products List" for each product category specified in Part 2, with the product proposed for use highlighted.
2. Indicate VOC content.

B. Samples: For each type of finish system and in each color and gloss of finish indicated.

1. Submit Samples on representative samples of actual wood substrates, 8 inches long.
2. Label each Sample for location and application area.

C. Product List: Cross-reference to finish system and locations of application areas. Use same designations indicated on Drawings and in schedules.

1.5 MAINTENANCE MATERIAL SUBMITTALS

A. Furnish extra materials, from the same product run, that match products installed and that are packaged with protective covering for storage and identified with labels describing contents.

1. Stains and Transparent Finishes: Five percent (5%), but not less than 1 gallon of each material and color applied.

1.6 DELIVERY, STORAGE, AND HANDLING

A. Store materials not in use in tightly covered containers in well-ventilated areas with ambient temperatures continuously maintained at not less than 45 deg F (7 deg C).

1. Maintain containers in clean condition, free of foreign materials and residue.
2. Remove rags and waste from storage areas daily.

1.7 FIELD CONDITIONS

A. Apply finishes only when temperature of surfaces to be finished and ambient air temperatures are between 50 and 95 deg F (10 and 35 deg C).

B. Do not apply finishes when relative humidity exceeds eighty-five percent (85%); at temperatures less than 5 deg F (3 deg C) above the dew point; or to damp or wet surfaces.

C. Do not apply exterior finishes in snow, rain, fog, or mist.

PART 2 - PRODUCTS

2.1 MANUFACTURERS

A. Manufacturers: available manufacturers offering products that may be incorporated into the Work include, but are not limited to, the following:

1. Benjamin Moore & Co.
2. Cabot
3. Pratt & Lambert
4. Sherwin-Williams Company (The)
5. Substitutions: Under provisions of Section 012500 “Substitution Procedures”.

2.2 MATERIALS, GENERAL

A. MPI Standards: Provide products that comply with MPI standards indicated and that are listed in its "MPI Approved Products List."

B. Material Compatibility:

1. Materials for use within each finish system that are compatible with one another and substrates indicated, under conditions of service and application as demonstrated by manufacturer, based on testing and field experience.
2. For each coat in a finish system, provide products recommended in writing by manufacturers of topcoat for use in finish system and on substrate indicated.

PART 3 - EXECUTION

3.1 EXAMINATION

A. Examine substrates and conditions, with Applicator present, for compliance with requirements for maximum moisture content and other conditions affecting performance of the Work.

B. Maximum Moisture Content of Exterior Wood Substrates: Fifteen percent (15%), when measured with an electronic moisture meter.

C. Maximum Moisture Content of Interior Wood Substrates: Fifteen percent (15%), when measured with an electronic moisture meter.

D. Verify suitability of substrates, including surface conditions and compatibility with existing finishes and primers.

E. Proceed with finish application only after unsatisfactory conditions have been corrected.

1. Beginning finish application constitutes Contractor's acceptance of substrates and conditions.

3.2 PREPARATION

A. Comply with manufacturer's written instructions and recommendations in "MPI Architectural Painting Specification Manual" applicable to substrates indicated.

B. Remove hardware, covers, plates, and similar items already in place that are removable. If removal is impractical or impossible because of size or weight of item, provide surface-applied protection before surface preparation and finishing.

1. After completing finishing operations, use workers skilled in the trades involved to reinstall items that were removed. Remove surface-applied protection if any.

C. Clean and prepare surfaces to be finished according to manufacturer's written instructions for each particular substrate condition and as specified.

1. Remove dust, dirt, oil, and grease by washing with a detergent solution; rinse thoroughly with clean water and allow to dry. Remove grade stamps and pencil marks by sanding lightly. Remove loose wood fibers by brushing.
2. Remove mildew by scrubbing with a commercial wash formulated for mildew removal and as recommended by stain manufacturer.

D. Exterior Wood Substrates:

1. Scrape and clean knots and apply coat of knot sealer before applying primer.
2. Prime edges, ends, faces, undersides, and backsides of wood.

a. For varnish-coated stained wood, stain edges and ends and prime with varnish. Prime undersides and backsides with varnish.

3. Countersink steel nails, if used, and fill with putty or plastic wood filler tinted to final color. Sand smooth when dried.

E. Interior Wood Substrates:

1. Refer to AWI recommendations.
2. Scrape and clean knots and apply coat of knot sealer before applying primer.
3. Sand surfaces that will be exposed to view and dust off.
4. After priming, fill holes and imperfections in the finish surfaces with putty or plastic wood filler. Sand smooth when dry.

3.3 APPLICATION

A. Apply finishes according to manufacturer's written instructions and recommendations in "MPI Architectural Painting Specification Manual."

1. Use applicators and techniques suited for finish and substrate indicated.
2. Finish surfaces behind movable equipment and furniture same as similar exposed surfaces.
3. Do not apply finishes over labels of independent testing agencies or equipment name, identification, performance rating, or nomenclature plates.

B. Apply finishes to produce surface films without cloudiness, holidays, lap marks, brush marks, runs, ropiness, or other surface imperfections.

3.4 CLEANING AND PROTECTION

A. At end of each workday, remove rubbish, empty cans, rags, and other discarded materials from Project site.

B. After completing finish application, clean spattered surfaces. Remove spattered materials by washing, scraping, or other methods. Do not scratch or damage adjacent finished surfaces.

C. Protect work of other trades against damage from finish application. Correct damage by cleaning, repairing, replacing, and refinishing, as approved by Architect, and leave in an undamaged condition.

D. At completion of construction activities of other trades, touch up and restore damaged or defaced finished wood surfaces.

3.5 EXTERIOR WOOD-FINISH-SYSTEM SCHEDULE

A. Wood Substrates, Wood Soffit:

1. Clear, Two-Component Polyurethane Varnish System:

a. Prime Coat: Varnish, aliphatic polyurethane, two-component, matching topcoat.
b. Topcoat: Varnish, aliphatic polyurethane, two-component gloss.

3.6 INTERIOR WOOD-FINISH-SYSTEM SCHEDULE

A. Wood Substrates, Non-Traffic Surfaces.

1. Polyurethane Varnish System:

a. Prime Coat: Polyurethane varnish matching topcoat.
b. Intermediate Coat: Polyurethane varnish matching topcoat.
c. Topcoat: Varnish, interior, polyurethane, oil modified, satin (Gloss Level 4), **MPI #57**.

END OF SECTION 099300

SECTION 099600 - HIGH-PERFORMANCE COATINGS

PART 1 - GENERAL

1.1 RELATED DOCUMENTS

A. Drawings and general provisions of the Contract, including General and Supplementary Conditions and Division 01 Specification Sections, apply to this Section.

1.2 SUMMARY

A. Section includes surface preparation and the application of high-performance coating systems on the following substrates:

1. Interior Substrates:

a. Wood.
b. Gypsum board.

B. Related Requirements:

1. Section 099113 "Exterior Painting" for general field painting.
2. Section 099123 "Interior Painting" for general field painting.

1.3 DEFINITIONS

A. Gloss Level 3: 10 to 25 units at 60 degrees and 10 to 35 units at 85 degrees, according to ASTM D 523.

B. Gloss Level 5: 35 to 70 units at 60 degrees, according to ASTM D 523.

1.4 ACTION SUBMITTALS

A. Product Data: For each type of product. Include preparation requirements and application instructions.

1. Include printout of current "MPI Approved Products List" for each product category specified, with the proposed product highlighted.
2. Indicate VOC content.

B. Samples: For each type of coating system and in each color and gloss of topcoat indicated.

1. Submit Samples on rigid backing, 8 inches square.
2. Apply coats on Samples to show each coat required for system.
3. Label each coat of each Sample.
4. Label each Sample for location and application area.

C. Product List: Cross-reference to coating system and locations of application areas. Use same designations indicated on Drawings and in schedules. Include color designations.

1.5 MAINTENANCE MATERIAL SUBMITTALS

A. Furnish extra materials, from the same product run, that match products installed and that are packaged with protective covering for storage and identified with labels describing contents.

1. Coatings: Five percent (5%), but not less than 1 gallon of each material and color applied.

1.6 DELIVERY, STORAGE, AND HANDLING

A. Store materials not in use in tightly covered containers in well-ventilated areas with ambient temperatures continuously maintained at not less than 45 deg F (7 deg C).

1. Maintain containers in clean condition, free of foreign materials and residue.
2. Remove rags and waste from storage areas daily.

1.7 FIELD CONDITIONS

A. Apply coatings only when temperature of surfaces to be coated and ambient air temperatures are between 50 and 95 deg F (10 and 35 deg C).

B. Do not apply coatings when relative humidity exceeds eighty-five percent (85%); at temperatures less than 5 deg F (3 deg C) above the dew point; or to damp or wet surfaces.

C. Do not apply exterior coatings in snow, rain, fog, or mist.

PART 2 - PRODUCTS

2.1 MANUFACTURERS

A. Basis-of-Design:

1. Benjamin Moore & Co.
2. Sherwin-Williams Company (The)

B. Manufacturers: Subject to compliance with requirements, available manufacturers offering products that may be incorporated into the Work include, but are not limited to, the following:

1. Behr Process Corporation
2. ICI Paints
3. Sumter Coatings, Inc.
4. Substitutions: Under provisions of Section 012500 “Substitution Procedures”.

2.2 HIGH-PERFORMANCE COATINGS, GENERAL

A. MPI Standards: Provide products that comply with MPI standards indicated and are listed in "MPI Approved Products List."

B. Material Compatibility:

1. Materials for use within each coating system that are compatible with one another and substrates indicated, under conditions of service and application as demonstrated by manufacturer, based on testing and field experience.
2. For each coat in a coating system, provide products recommended in writing by manufacturers of topcoat for use in coating system and on substrate indicated.
3. Products shall be of same manufacturer for each coat in a coating system.

C. Colors: **EP**, as indicated in Section 090000 “Schedule of Finishes”.

2.3 SOURCE QUALITY CONTROL

A. Testing of Coating Materials: Owner reserves the right to invoke the following procedure:

1. Owner will engage the services of a qualified testing agency to sample coating materials. Contractor will be notified in advance and may be present when samples are taken. If coating materials have already been delivered to Project site, samples may be taken at Project site. Samples will be identified, sealed, and certified by testing agency.
2. Testing agency will perform tests for compliance with product requirements.
3. Owner may direct Contractor to stop applying coatings if test results show materials being used do not comply with product requirements. Contractor shall remove noncomplying coating materials from Project site, pay for testing, and recoat surfaces coated with rejected materials. Contractor will be required to remove rejected materials from previously coated surfaces if, on recoating with complying materials, the two (2) coatings are incompatible.

PART 3 - EXECUTION

3.1 EXAMINATION

A. Examine substrates and conditions, with Applicator present, for compliance with requirements for maximum moisture content and other conditions affecting performance of the Work.

B. Maximum Moisture Content of Substrates: When measured with an electronic moisture meter as follows:

1. Wood: Fifteen percent (15%).
2. Gypsum Board: Twelve percent (12%).

C. Gypsum Board Substrates: Verify that finishing compound is sanded smooth.

D. Verify suitability of substrates, including surface conditions and compatibility with existing finishes and primers.

E. Proceed with coating application only after unsatisfactory conditions have been corrected.

1. Application of coating indicates acceptance of surfaces and conditions.

3.2 PREPARATION

A. Comply with manufacturer's written instructions and recommendations in "MPI Architectural Painting Specification Manual" applicable to substrates and coating systems indicated.

B. Remove hardware, covers, plates, and similar items already in place that are removable and are not to be painted. If removal is impractical or impossible because of size or weight of item, provide surface-applied protection before surface preparation and painting.

1. After completing painting operations, use workers skilled in the trades involved to reinstall items that were removed. Remove surface-applied protection.

C. Clean substrates of substances that could impair bond of coatings, including dust, dirt, oil, grease, and incompatible paints and encapsulants.

1. Remove incompatible primers and reprime substrate with compatible primers or apply tie coat as required to produce coating systems indicated.

D. Wood Substrates:

1. Scrape and clean knots. Before applying primer, apply coat of knot sealer that is recommended in writing by topcoat manufacturer for coating system indicated.
2. Sand surfaces that will be exposed to view and dust off.
3. Prime edges, ends, faces, undersides, and backsides of wood.
4. After priming, fill holes and imperfections in the finish surfaces with filler that is recommended in writing by topcoat manufacturer for coating system indicated. Sand smooth when dried.

3.3 APPLICATION

A. Apply high-performance coatings according to manufacturer's written instructions and recommendations in "MPI Architectural Painting Specification Manual."

1. Use applicators and techniques suited for coating and substrate indicated.
2. Coat surfaces behind movable equipment and furniture same as similar exposed surfaces. Before final installation, coat surfaces behind permanently fixed equipment or furniture with prime coat only.
3. Coat back sides of access panels, removable or hinged covers, and similar hinged items to match exposed surfaces.
4. Do not apply coatings over labels of independent testing agencies or equipment name, identification, performance rating, or nomenclature plates.

B. Tint each undercoat a lighter shade to facilitate identification of each coat if multiple coats of the same material are to be applied. Tint undercoats to match color of finish coat, but provide sufficient difference in shade of undercoats to distinguish each separate coat.

C. If undercoats or other conditions show through final coat, apply additional coats until cured film has a uniform coating finish, color, and appearance.

D. Apply coatings to produce surface films without cloudiness, spotting, holidays, laps, brush marks, runs, sags, ropiness, or other surface imperfections. Produce sharp glass lines and color breaks.

3.4 FIELD QUALITY CONTROL

A. Dry Film Thickness Testing: Owner will engage the services of a qualified testing and inspecting agency to inspect and test coatings for dry film thickness.

1. Contractor shall touch up and restore coated surfaces damaged by testing.
2. If test results show that dry film thickness of applied coating does not comply with coating manufacturer's written recommendations, Contractor shall pay for testing and apply additional coats as needed to provide dry film thickness that complies with coating manufacturer's written recommendations.

3.5 CLEANING AND PROTECTION

A. At end of each workday, remove rubbish, empty cans, rags, and other discarded materials from Project site.

B. After completing coating application, clean spattered surfaces. Remove spattered coatings by washing, scraping, or other methods. Do not scratch or damage adjacent finished surfaces.

C. Protect work of other trades against damage from coating operation. Correct damage to work of other trades by cleaning, repairing, replacing, and recoating, as approved by Architect, and leave in an undamaged condition.

D. At completion of construction activities of other trades, touch up and restore damaged or defaced coated surfaces.

3.6 INTERIOR HIGH-PERFORMANCE COATING SCHEDULE

B. Wood Substrates: Wood trim.

1. Epoxy System, **MPI INT 6.3L**:

a. Prime Coat: Epoxy, matching topcoat.
b. Intermediate Coat: Epoxy, matching topcoat.
c. Topcoat: Epoxy, semi-gloss (Gloss Level 5), **MPI #77**.

C. Gypsum Board/Plaster Substrates:

1. Epoxy System, **MPI INT 9.2E**:

a. Prime Coat: Primer sealer, latex, interior, **MPI #50**.
b. Intermediate Coat: Epoxy, matching topcoat.
c. Topcoat: Epoxy, interior, eggshell (Gloss Level 3), **MPI #77**.

END OF SECTION 099600

SECTION 101100 - VISUAL DISPLAY UNITS

PART 1 - GENERAL

1.1 RELATED DOCUMENTS

A. Drawings and general provisions of the Contract, including General and Supplementary Conditions and Division 01 Specification Sections, apply to this Section.

1.2 SUMMARY

A. Section Includes:

1. Markerboards.
2. Tackboards.
3. Support systems for visual display boards.

1.3 DEFINITIONS

A. Tackboard: Framed or unframed, tackable, visual display board assembly.

B. Visual Display Board Assembly: Visual display surface that is factory fabricated into composite panel form, either with or without a perimeter frame; includes chalkboards, markerboards, and tackboards.

1.4 ACTION SUBMITTALS

A. Product Data: For each type of product.

1. Include construction details, material descriptions, dimensions of individual components and profiles, finishes, and accessories for visual display units.

B. Shop Drawings: For visual display units.

1. Include plans, elevations, sections, details, and attachments to other work.
2. Show locations of panel joints.
3. Include sections of typical trim members.

C. Samples: For each type of visual display unit indicated, for units with factory-applied color finishes, and as follows:

1. Actual sections of porcelain-enamel face sheet and tackboard assembly surface.
2. Include accessory Samples to verify color selected.

D. Product Schedule: For visual display units. Use same designations indicated on Drawings.

1.5 INFORMATIONAL SUBMITTALS

A. Product Test Reports: Based on evaluation of comprehensive tests performed by a qualified testing agency, for surface-burning characteristics of fabrics.

B. Sample Warranties: For special warranties.

1.6 CLOSEOUT SUBMITTALS

A. Maintenance Data: For visual display units to include in maintenance manuals.

1.7 DELIVERY, STORAGE, AND HANDLING

A. Deliver factory-fabricated visual display units completely assembled in one (1) piece. If dimensions exceed maximum manufactured unit size, or if unit size is impracticable to ship in one (1) piece, provide two (2) or more pieces with joints in locations indicated on approved Shop Drawings.

B. Store visual display surfaces vertically with packing materials between each unit.

1.8 FIELD CONDITIONS

A. Environmental Limitations: Do not deliver or install visual display surfaces until spaces are enclosed and weathertight, wet work in spaces is complete and dry, work above ceilings is complete, and temporary HVAC system is operating and maintaining ambient temperature and humidity conditions at occupancy levels during the remainder of the construction period.

1.9 WARRANTY

A. Special Warranty for Porcelain-Enamel Face Sheets: Manufacturer agrees to repair or replace porcelain-enamel face sheets that fail in materials or workmanship within specified warranty period.

1. Failures include, but are not limited to, the following:

a. Surfaces lose original writing and erasing qualities.
b. Surfaces exhibit crazing, cracking, or flaking.

2. Warranty Period: Life of the building.

PART 2 - PRODUCTS

2.1 MANUFACTURERS

A. Source Limitations: Obtain each type of visual display unit from single source from single manufacturer.

2.2 PERFORMANCE REQUIREMENTS

A. Surface-Burning Characteristics: Comply with ASTM E 84; testing by a qualified testing agency. Identify products with appropriate markings of applicable testing agency.

1. Flame-Spread Index: 25 or less.
2. Smoke-Developed Index: 50 or less.

2.3 MARKERBOARD ASSEMBLIES

A. Porcelain-Enamel Markerboards: Balanced, high-pressure, factory-laminated markerboard assembly of three-ply construction consisting of moisture-barrier backing, core material, and 0.021-inch-thick, porcelain-enamel face sheet with high or low-gloss finish.

1. Basis-of-Design:

   a. Claridge Products and Equipment, Inc.; **LCS Deluxe**

2. Manufacturers: Subject to compliance with requirements, available manufacturers offering products that may be incorporated into the Work include, but are not limited to, the following:

   a. AARCO Products, Inc.
   b. ADP Lemco, Inc.
   c. Substitutions: Under provisions of Section 012500 “Substitution Procedures”.

3. MDF Core: 7/16-inch-thick; with manufacturer's standard moisture-barrier backing.
4. Laminating Adhesive: Manufacturer's standard, moisture-resistant thermoplastic type.

2.4 TACKBOARD PANELS

A. Plastic-Impregnated-Cork Tackboard Surface: ¼-inch-thick, plastic-impregnated cork factory laminated to ¼-inch-thick hardboard backing.

1. Basis-of-Design:

   a. Forbo Flooring Systems; **Bulletin Board**

2. Manufacturers: Subject to compliance with requirements, available manufacturers offering products that may be incorporated into the Work include, but are not limited to, the following:

   a. AARCO Products, Inc.
   b. Substitutions: Under provisions of Section 012500 “Substitution Procedures”.

B. Fabric-Wrapped-Cork Tackboard Surface: Polyester fabric factory laminated to ¼-inch-thick cork sheet laminated to ¼-inch-thick hardboard backing.

1. Basis-of-Design:

   a. Claridge Products and Equipment, Inc.; **Guilford of Maine Fabric Bulletin Board**

2. Manufacturers: Subject to compliance with requirements, available manufacturers offering products that may be incorporated into the Work include, but are not limited to, the following:

   a. AARCO Products, Inc.
   b. Substitutions: Under provisions of Section 012500 “Substitution Procedures”.

2.5 MARKERBOARD AND TACKBOARD ACCESSORIES

A. Aluminum Frames and Trim: Fabricated from not less than 0.062-inch-thick, extruded aluminum; of size and shape indicated on Drawings.

1. Factory-Applied Trim: Manufacturer's standard.

B. Field-Applied Wood Trim: Comply with requirements specified in Section 064023 "Interior Architectural Woodwork."

C. Chalktray: Manufacturer's standard, continuous.

1. Box Type: Extruded aluminum with slanted front, grooved tray, and cast-aluminum end closures.

2.6 MATERIALS, GENERAL

A. Porcelain-Enamel Face Sheet: Manufacturer's standard steel sheet with porcelain-enamel coating fused to steel; uncoated thickness indicated.

1. Matte Finish: Low reflective; chalk wipes clean with dry cloth or standard eraser.

B. Natural-Cork Sheet: Seamless, single-layer, compressed fine-grain cork sheet; bulletin board quality; face sanded for natural finish; with surface-burning characteristics indicated.

C. Plastic-Impregnated-Cork Sheet: Seamless, homogeneous, self-sealing sheet consisting of granulated cork, linseed oil, resin binders, and dry pigments that are mixed and calendared onto fabric backing; with washable vinyl finish and integral color throughout with surface-burning characteristics indicated.

D. Polyester Fabric: Nondirectional weave, one hundred percent (100%) polyester; weighing not less than 15 oz./sq. yd.; with surface-burning characteristics indicated.

E. MDF: ANSI A208.2, Grade 130.

F. Hardboard: ANSI A135.4, tempered.

G. Extruded Aluminum: ASTM B 221, Alloy 6063.

2.7 FABRICATION

A. Porcelain-Enamel Visual Display Assemblies: Laminate porcelain-enamel face sheet and backing sheet to core material under heat and pressure with manufacturer's standard flexible, waterproof adhesive.

B. Visual Display Boards: Factory assemble visual display boards unless otherwise indicated.

1. Where factory-applied trim is indicated, trim shall be assembled and attached to visual display boards at manufacturer's factory before shipment.

C. Factory-Assembled Visual Display Units: Coordinate factory-assembled units with trim and accessories indicated. Join parts with a neat, precision fit.

1. Make joints only where total length exceeds maximum manufactured length. Fabricate with minimum number of joints, balanced around center of board, as acceptable to Architect.
2. Provide manufacturer's standard vertical-joint spline system between abutting sections of markerboards.
3. Where size of visual display boards or other conditions require support in addition to normal trim, provide structural supports or modify trim as indicated or as selected by Architect from manufacturer's standard structural support accessories to suit conditions indicated.

D. Aluminum Frames and Trim: Fabricate units straight and of single lengths, keeping joints to a minimum. Miter corners to a neat, hairline closure.

1. Where factory-applied trim is indicated, trim shall be assembled and attached to visual display units at manufacturer's factory before shipment.

2.8 GENERAL FINISH REQUIREMENTS

A. Comply with NAAMM's "Metal Finishes Manual for Architectural and Metal Products" for recommendations for applying and designating finishes.

B. Protect mechanical finishes on exposed surfaces from damage by applying a strippable, temporary protective covering before shipping.

C. Appearance of Finished Work: Noticeable variations in same piece are not acceptable. Variations in appearance of adjoining components are acceptable if they are within the range of approved Samples and are assembled or installed to minimize contrast.

2.9 ALUMINUM FINISHES

A. Clear Anodic Finish: AAMA 611, AA-M12C22A31, Class II, 0.010-mm or thicker.

2.10 VISUAL DISPLAY SCHEDULE

A. Visual Display Board: Factory assembled.

1. Markerboard: Porcelain-enamel markerboard assembly.

a. Color: **WB**, as indicated in Section 090000 “Schedule of Finishes”.

2. Corners: Square.
3. Size and Mounting Height: As indicated on Drawings.
4. Mounting: Wall.
5. Factory-Applied Aluminum Trim: Manufacturer's standard with clear anodic finish.
6. Accessories:

a. Chalktray: Box type.

B. Visual Display Board: Factory assembled.

1. Tackboard: Plastic-impregnated-cork tackboard assembly.

a. Color: **TB-1**, as indicated in Section 090000 “Schedule of Finishes”.

2. Corners: Square.
3. Size and Mounting Height: As indicated on Drawings.
4. Mounting: Wall.
5. Edges: Concealed by trim.

a. Factory-Applied Aluminum Trim: Manufacturer's standard style, with clear anodic finish.

C. Visual Display Board: Factory assembled.

1. Tackboard: Polyester-fabric faced tackboard assembly.

a. Color: **TB-2**, as indicated in Section 090000 “Schedule of Finishes”.

2. Corners: Square.
3. Size and Mounting Height: As indicated on Drawings.
4. Mounting: Wall.
5. Edges: Concealed by trim.

PART 3 - EXECUTION

3.1 EXAMINATION

A. Examine substrates and conditions, with Installer present, for compliance with requirements for installation tolerances, surface conditions of wall, and other conditions affecting performance of the Work.

B. Examine walls and partitions for proper preparation and backing for visual display surfaces.

C. Proceed with installation only after unsatisfactory conditions have been corrected.

3.2 PREPARATION

A. Comply with manufacturer's written instructions for surface preparation.

B. Clean substrates of substances, such as dirt, mold, and mildew, that could impair the performance of and affect the smooth, finished surfaces of visual display boards.

C. Prepare surfaces to achieve a smooth, dry, clean surface free of flaking, unsound coatings, cracks, defects, projections, depressions, and substances that will impair bond between visual display surfaces and wall surfaces.

3.3 INSTALLATION

A. General: Install visual display surfaces in locations and at mounting heights indicated on Drawings. Keep perimeter lines straight, level, and plumb. Provide grounds, clips, backing materials, adhesives, brackets, anchors, trim, and accessories necessary for complete installation.

B. Factory-Fabricated Visual Display Board Assemblies: Attach concealed clips, hangers, and grounds to wall surfaces and to visual display boards with fasteners at not more than 16 inches o.c. Secure both top and bottom of boards to walls.

3.4 CLEANING AND PROTECTION

A. Clean visual display units in accordance with manufacturer's written instructions. Attach one (1) removable cleaning instructions label to visual display unit in each room.

B. Touch up factory-applied finishes to restore damaged or soiled areas.

C. Cover and protect visual display surfaces after installation and cleaning.

END OF SECTION 101100

SECTION 101400 - SIGNAGE

PART 1 - GENERAL

1.1 RELATED DOCUMENTS

A. Drawings and general provisions of the Contract, including General and Supplementary Conditions and Division 01 Specification Sections, apply to this Section.

1.2 SUMMARY

A. This Section includes the following:

1. Panel signs.

B. Related Sections include the following:

1. Section 015000 "Temporary Facilities and Controls" for temporary information and directional signs.
2. Section 220553 "Identification for Plumbing Piping and Equipment" for labels, tags, and nameplates for plumbing systems and equipment.
3. Section 230553 "Identification for HVAC Piping and Equipment" for labels, tags, and nameplates for HVAC systems and equipment.
4. Section 260553 "Identification for Electrical Systems" for labels, tags, and nameplates for electrical equipment.
5. Section 265119 “LED Interior Lighting” for illuminated Exit signs.
6. Section 265219 "Emergency and Exit Lighting" for illuminated Exit signs.

1.3 ACTION SUBMITTALS

A. Product Data: For each type of product indicated.

B. Shop Drawings: For panel signs.

1. Include fabrication and installation details and attachments to other work.
2. Show sign mounting heights, locations of supplementary supports to be provided by other installers, and accessories.
3. Show message list, typestyles, graphic elements, including raised characters and Braille, and layout for each sign.

C. Samples: Manufacturer's color charts consisting of actual units or sections of units showing the full range of colors available for the following:

1. Acrylic Sheet: Full-size Sample for each color required.

D. Sign Schedule: Use same designations indicated on Drawings or as listed in special schedule.

1.4 INFORMATIONAL SUBMITTALS

A. Qualification Data: For manufacturer.

B. Sample Warranty: For special warranty.

1.5 CLOSEOUT SUBMITTALS

A. Maintenance Data: For signs to include in maintenance manuals.

1.6 QUALITY ASSURANCE

A. Manufacturer Qualifications: Shop that employs skilled workers who custom-fabricate products similar to those required for this Project and whose products have a record of successful in-service performance.

1.7 WARRANTY

A. Special Warranty: Manufacturer agrees to repair or replace components of signs that fail in materials or workmanship within specified warranty period.

1. Failures include, but are not limited to, the following:

a. Deterioration of finishes beyond normal weathering.
b. Deterioration of embedded graphic image
c. Separation or delamination of sheet material and components.

2. Warranty Period: Five (5) years from date of Substantial Completion.

PART 2 - PRODUCTS

2.1 PERFORMANCE REQUIREMENTS

A. Accessibility Standard: Comply with applicable provisions in the ABA standards of the Federal agency having jurisdiction and ICC/ANSI A117.1.

B. Source Limitations for Signs: Obtain each sign type indicated from one (1) source from a single manufacturer.

2.2 PANEL SIGNS

A. Manufacturers: Subject to compliance with requirements, provide products by one (1) of the following:

1. ASE, Inc.
2. Best Sign Systems, Inc.
3. Bayuk Graphic Systems, Inc.
4. Intelligent Signage, Inc.
5. Seton Identification Products
6. Substitutions: Under provisions of Section 012500 “Substitution Procedures”.

B. Interior Panel Signs: Provide smooth sign panel surfaces constructed to remain flat under installed conditions within a tolerance of plus or minus 1/16-inch measured diagonally from corner to corner.

C. Interior Signs: Provide matte finish plaques in sizes to accommodate the message indicated in the Signage Schedule on the Door Schedule and the Signage Details drawing in the Construction Documents. Fabricate of thermoformed acrylic plastic conforming to ASTM D 709, Type NDP minimum 1/8-inch. Provide with square corners.

1. Graphics Application:

a. Raised Letters: Minimum 1/32-inch-thick acrylic message letters. These shall comply with Section 703.2.3 (not italic, oblique, script or decorative) and 703.2.5 (1-inch character height) of the ICC/ANSI A117.1 Code.
b. Pictogram: Each sign shall be provided with an international symbol of accessibility per Section 4.30.7 (Figure 43 a and b) of the Americans with Disabilities Act. The raised image pictogram shall have a field height of 6 inches minimum. Text and braille shall not be located in the pictogram field.
c. Messages:

1) Typeface: Helvetica Medium, with accompanying Grade 2 Braille message.
2) Type Size: 1-inch large and small case, with width, height and stroke complying with the requirements of Section 703.2.6 (maximum stroke width fifteen percent (15%) of the height of each letter at the top surface of the character and thirty percent (30%) maximum of the height of each letter at the base, Section 703.2.7 (character spacing 1/8-inch minimum and four (4) times the tactile character stroke width maximum), and Section 703.2.8 (spacing between lines shall be between one hundred thirty-five percent (135%) and one hundred seventy percent (170%) of the tactile character height) of the ICC/ANSI A117.1 Code.
3) Background Color: In color selected by Architect and Owner from manufacturer's entire range, . Message Color: In contrasting color of background.

2.3 MATERIALS

A. Acrylic Sheet: ASTM D 4802, Category A-1 (cell-cast sheet), Type UVA (UV absorbing).

2.4 ACCESSORIES

A. Adhesive: As recommended by sign manufacturer.

1. Adhesive shall have a VOC content of 70 g/L or less when calculated according to 40 CFR 59, Subpart D (EPA Method 24).

2.5 FABRICATION

A. General: Provide manufacturer's standard sign assemblies according to requirements indicated.

1. Preassemble signs in the shop to greatest extent possible. Disassemble signs and assemblies only as necessary for shipping and handling limitations. Clearly mark units for reassembly and installation; apply markings in locations concealed from view after final assembly.
2. Mill joints to tight, hairline fit. Form assemblies and joints exposed to weather to exclude water penetration and retention.

3. Provide rabbets, lugs, and tabs necessary to assemble components and to attach to existing work. Drill and tap for required fasteners. Use concealed fasteners where possible; use exposed fasteners that match sign finish.

B. Signs with Changeable Message Capability: Fabricate signs to allow insertion of changeable messages as follows:

1. For slide-in changeable inserts, fabricate slot without burrs or constrictions that inhibit function. Furnish initial changeable insert. Subsequent changeable inserts are by Owner.

2.6 GENERAL FINISH REQUIREMENTS

A. Appearance of Finished Work: Noticeable variations in the same piece are not acceptable. Variations in appearance of other components are acceptable if they are within the range of approved Samples and are assembled or installed to minimize contrast.

2.7 ACRYLIC SHEET FINISHES

A. Colored Coatings for Acrylic Sheet: For copy and background colors, provide colored coatings, including inks, dyes, and paints, that are recommended by acrylic manufacturers for optimum adherence to acrylic surface and that are UV and water resistant for five (5) years for application intended.

PART 3 - EXECUTION

3.1 EXAMINATION

A. Examine substrates, areas, and conditions, with Installer present, for compliance with requirements for installation tolerances and other conditions affecting performance of work.

B. Verify that sign-support surfaces are within tolerances to accommodate signs without gaps or irregularities between backs of signs and support surfaces unless otherwise indicated.

C. Proceed with installation only after unsatisfactory conditions have been corrected.

3.2 INSTALLATION

A. General: Install signs using mounting methods indicated and according to manufacturer's written instructions.

1. Install signs level, plumb, true to line, and at locations and heights indicated, with sign surfaces free of distortion and other defects in appearance.
2. Install signs so they do not protrude or obstruct according to the accessibility standard.
3. Before installation, verify that sign surfaces are clean and free of materials or debris that would impair installation.

B. Accessible Signage: Install in locations on walls as indicated on Drawings and according to the accessibility standard.

1. Interior Wall Signs: Install signs on walls adjacent to latch side of door where applicable. Where not indicated or possible, such as double doors, install signs on nearest adjacent

walls. Locate to allow approach within 3 inches of sign without encountering protruding objects or standing within swing of door.

C. Mounting Methods:

1. Silicone-Adhesive Mounting: Clean bond-breaking materials from substrate surface and remove loose debris. Apply linear beads or spots of adhesive symmetrically to back of sign and of suitable quantity to support weight of sign after cure without slippage. Keep adhesive away from edges to prevent adhesive extrusion as sign is applied and to prevent visibility of cured adhesive at sign edges. Place sign in position and push to engage adhesive. Temporarily support sign in position until adhesive fully sets.

3.3 ADJUSTING AND CLEANING

A. Remove and replace damaged or deformed signs and signs that do not comply with specified requirements. Replace signs with damaged or deteriorated finishes or components that cannot be successfully repaired by finish touchup or similar minor repair procedures.

B. Remove temporary protective coverings and strippable films as signs are installed.

C. On completion of installation, clean exposed surfaces of signs according to manufacturer's written instructions and touch up minor nicks and abrasions in finish. Maintain signs in a clean condition during construction and protect from damage until acceptance by Owner.

END OF SECTION 101400

SECTION 101401 - SITE SIGNAGE

PART 1 - GENERAL

1.1 RELATED DOCUMENTS

A. Drawings and general provisions of the Contract, including General and Supplementary Conditions and Division 01 Specification Sections, apply to this Section.

1.2 SUMMARY

A. This Section includes the following:

1. 'Stop' signs
2. 'Handicapped Parking' signs
3. ‘Do Not Enter’ signs
4. ‘One Way’ signs
5. Any other signs identified on Sheets C006 “Site Plan – Signage and Pavement Markings”

1.3 DEFINITIONS

A. ADA-ABA Accessibility Guidelines: U.S. Architectural & Transportation Barriers Compliance Board's "Americans with Disabilities Act (ADA) Accessibility Guidelines for Buildings and Facilities; Architectural Barriers Act (ABA) Accessibility Guidelines."

1.4 SUBMITTALS

A. Product Data: For each type of product.

B. Shop Drawings: Show fabrication and installation details for signs and posts.

1.5 QUALITY ASSURANCE

A. Regulatory Requirements: Comply with applicable provisions of the Standard Specifications Form 818.

PART 2 - PRODUCTS

2.1 MATERIALS

A. 'Stop' Signs: Shall conform to "State of Connecticut Department of Transportation "Standard Specification for Road, Bridges, and Incidental Construction" 2020 edition and latest supplements, Form 818 Article M.18.09.2.

B. Manual on Uniform Traffic Control Devices (MUTCD).

C. Metal Sign Posts: Shall conform to "State of Connecticut Department of Transportation "Standard Specification for Road, Bridges, and Incidental Construction" 2020 edition and latest supplements, Form 818 Article M.18.14.

D. Square Metal Sign Posts: Shall be as indicated on the Contract Drawings.

E. Sign Mounting Bolts: Shall conform to "State of Connecticut Department of Transportation "Standard Specification for Road, Bridges, and Incidental Construction" 2020 edition and latest supplements, Form 818, Article M.18.15.

F. Sign Post Foundations: Shall be as indicated on the Contract Drawings and in conformance with Section 32 13 16 "Cast-In-Place Concrete."

G. Wayfinding Signs: Shall be as detailed on the contract drawings.

PART 3 - EXECUTION

3.1 INSTALLATION

A. Locate signs and accessories where indicated and complying with the "State of Connecticut Department of Transportation "Standard Specification for Road, Bridges, and Incidental Construction" 2020 edition and latest supplements, Form 818, Sections 12.07 and 12.08.

B. Install signs level, plumb, and at heights indicated with sign surfaces free of distortion and other defects in appearance.

C. Install square posts as indicated on the Contract Drawings and per the manufacturer's recommendations.

D. Sign Posts with Concrete Foundation: Drill holes in firm, undisturbed or compacted soil to the dimensions indicated on the Contract Drawings. Excavate deeper as required for adequate support in soft and loose soils and for posts with heavy lateral loads. Place concrete around posts in a continuous pour. Trowel finish around post. Slope to direct water away from posts.

END OF SECTION 101401

13373.00108.jn1322-spec 101401 site signage.docx

SECTION 101419 - DIMENSIONAL LETTER SIGNAGE

PART 1 - GENERAL

1.1 RELATED DOCUMENTS

A. Drawings and general provisions of the Contract, including General and Supplementary Conditions and Division 01 Specification Sections, apply to this Section.

1.2 SUMMARY

A. Section Includes:

1. Fabricated channel dimensional characters.

1.3 ACTION SUBMITTALS

A. Product Data: For each type of product.

B. Shop Drawings: For signs.

1. Include fabrication and installation details and attachments to other work.
2. Show sign mounting heights, locations of supplementary supports to be provided by other installers, and accessories.
3. Show message list, typestyles, graphic elements, and layout for each sign at least half size.

C. Samples: For each type of sign assembly showing all components and with the required finish(es), in manufacturer's standard size unless otherwise indicated and as follows:

1. Dimensional Characters: Full-size Sample of each type of dimensional character.
2. Exposed Accessories: Full-size Sample of each accessory type.

D. Product Schedule: For dimensional letter signs. Use same designations indicated on Drawings or specified.

1.4 INFORMATIONAL SUBMITTALS

A. Qualification Data: For manufacturer.

B. Sample Warranty: For special warranty.

1.5 CLOSEOUT SUBMITTALS

A. Maintenance Data: For signs to include in maintenance manuals.

1.6 QUALITY ASSURANCE

A. Installer Qualifications: Manufacturer of products.

1.7 WARRANTY

A. Special Warranty: Manufacturer agrees to repair or replace components of signs that fail in materials or workmanship within specified warranty period.

1. Failures include, but are not limited to, the following:

a. Deterioration of finishes beyond normal weathering.
b. Separation or delamination of sheet materials and components.

2. Warranty Period: Five (5) years from date of Substantial Completion.

PART 2 - PRODUCTS

2.1 PERFORMANCE REQUIREMENTS

A. Thermal Movements: For exterior fabricated channel dimensional characters, allow for thermal movements from ambient and surface temperature changes.

1. Temperature Change: 120 deg F (67 deg C), ambient; 180 deg F (100 deg C), material surfaces.

2.2 DIMENSIONAL CHARACTERS

A. Fabricated Channel Characters: Metal face and side returns, formed free from warp and distortion; with uniform faces, sharp corners, and precisely formed lines and profiles; internally braced for stability, to meet structural performance loading without oil-canning or other surface deformation, and for securing fasteners; and as follows.

1. Manufacturers: Subject to compliance with requirements, available manufacturers offering products that may be incorporated into the Work include, but are not limited to, the following:

a. ASI Sign Systems, Inc.
b. Gemini Incorporated
c. Seton Identification Products
d. Substitution Procedures: Under provisions of Section 012500 “Substitution Procedures”.

2. Character Material: Sheet or plate stainless-steel.
3. Material Thickness: Manufacturer's standard for size and design of character.
5. Character Height: As indicated on Drawings.
6. Character Depth: As indicated on Drawings.
7. Finishes:

a. Integral Stainless-Steel Finish: No. 4.

8. Mounting: Projecting studs.

a. Hold characters at 1-inch distance from wall surface.

9. Typeface: As indicated on Drawings.

2.3 DIMENSIONAL CHARACTER MATERIALS

A. Stainless-Steel Sheet: ASTM A 240 or ASTM A 666, Type 304, stretcher-leveled standard of flatness.

2.4 ACCESSORIES

A. Fasteners and Anchors: Manufacturer's standard as required for secure anchorage of signage, noncorrosive and compatible with each material joined, and complying with the following:

1. Use concealed fasteners and anchors unless indicated to be exposed.
2. For exterior exposure, furnish stainless-steel devices unless otherwise indicated.
3. Sign Mounting Fasteners:

a. Projecting Studs: Threaded studs with sleeve spacer, welded or brazed to back of sign material, screwed into back of sign assembly, or screwed into tapped lugs cast integrally into back of cast sign material, unless otherwise indicated.

2.5 FABRICATION

A. General: Provide manufacturer's standard sign assemblies according to requirements indicated.

1. Preassemble signs and assemblies in the shop to greatest extent possible. Disassemble signs and assemblies only as necessary for shipping and handling limitations. Clearly mark units for reassembly and installation; apply markings in locations concealed from view after final assembly.
2. Mill joints to a tight, hairline fit. Form assemblies and joints exposed to weather to resist water penetration and retention.
3. Comply with AWS for recommended practices in welding and brazing. Provide welds and brazes behind finished surfaces without distorting or discoloring exposed side. Clean exposed welded and brazed connections of flux, and dress exposed and contact surfaces.
4. Conceal connections if possible; otherwise, locate connections where they are inconspicuous.
5. Internally brace dimensional characters for stability and for securing fasteners.
6. Provide rebates, lugs, and brackets necessary to assemble components and to attach to existing work. Drill and tap for required fasteners. Use concealed fasteners where possible; use exposed fasteners that match sign finish.

2.6 GENERAL FINISH REQUIREMENTS

A. Protect mechanical finishes on exposed surfaces from damage by applying a strippable, temporary protective covering before shipping.

B. Appearance of Finished Work: Noticeable variations in same piece are not acceptable. Variations in appearance of adjoining components are acceptable if they are within the range of approved Samples and are assembled or installed to minimize contrast.

C. Directional Finishes: Run grain with long dimension of each piece and perpendicular to long dimension of finished trim or border surface unless otherwise indicated.

2.7 STAINLESS-STEEL FINISHES

A. Surface Preparation: Remove tool and die marks and stretch lines, or blend into finish.

B. Polished Finishes: Grind and polish surfaces to produce uniform finish, free of cross scratches.

1. When polishing is completed, passivate and rinse surfaces. Remove embedded foreign matter and leave surfaces chemically clean.
2. Directional Satin Finish: No. 4.

PART 3 - EXECUTION

3.1 EXAMINATION

A. Examine substrates, areas, and conditions, with Installer present, for compliance with requirements for installation tolerances and other conditions affecting performance.

B. Verify that sign-support surfaces are within tolerances to accommodate signs without gaps or irregularities between backs of signs and support surfaces unless otherwise indicated.

C. Proceed with installation only after unsatisfactory conditions have been corrected.

3.2 INSTALLATION OF DIMENSIONAL CHARACTERS

A. General: Install signs using mounting methods indicated and according to manufacturer's written instructions.

1. Install signs level, plumb, true to line, and at locations and heights indicated, with sign surfaces free of distortion and other defects in appearance.
2. Before installation, verify that sign surfaces are clean and free of materials or debris that would impair installation.

B. Mounting Methods:

1. Projecting Studs: Using a template, drill holes in substrate aligning with studs on back of sign. Remove loose debris from hole and substrate surface.

a. Masonry Substrates: Fill holes with adhesive. Leave recess space in hole for displaced adhesive. Place spacers on studs, place sign in position, and push until spacers are pinched between sign and substrate, embedding the stud ends in holes. Temporarily support sign in position until adhesive fully sets.

3.3 ADJUSTING AND CLEANING

A. Remove and replace damaged or deformed characters and signs that do not comply with specified requirements. Replace characters with damaged or deteriorated finishes or components that cannot be successfully repaired by finish touchup or similar minor repair procedures.

B. Remove temporary protective coverings and strippable films as signs are installed.

C. On completion of installation, clean exposed surfaces of signs according to manufacturer's written instructions and touch up minor nicks and abrasions in finish. Maintain signs in a clean condition during construction and protect from damage until acceptance by Owner.

END OF SECTION 101419

SECTION 102113.19 - PLASTIC TOILET COMPARTMENTS

PART 1 - GENERAL

1.1 RELATED DOCUMENTS

A. Drawings and general provisions of the Contract, including General and Supplementary Conditions and Division 01 Specification Sections, apply to this Section.

1.2 SUMMARY

A. Section Includes:

1. Solid-plastic toilet compartments.

B. Related Requirements:

1. Section 102800 "Toilet, Bath, and Laundry Accessories" for accessories mounted on toilet compartments.

1.3 COORDINATION

A. Coordinate requirements for blocking, reinforcing, and other supports concealed within wall to ensure that toilet compartments can be supported and installed as indicated.

1.4 ACTION SUBMITTALS

A. Product Data:

1. Solid-plastic toilet compartments:

a. Include construction details, material descriptions, dimensions of individual components and profiles, and finishes for toilet compartments.

B. Shop Drawings: For toilet compartments.

1. Include plans, elevations, sections, details, and attachment details.
2. Show locations of cutouts for compartment-mounted toilet accessories.
3. Show locations of centerlines of toilet fixtures.
4. Show locations of floor drains.
5. Show overhead support or bracing locations.

C. Samples: Manufacturer's standard color sheets, showing full range of available colors for each type of toilet compartment.

1. Include Samples of hardware and accessories involving material and color selection.

D. Product Schedule: For toilet compartments, prepared by or under the supervision of supplier, detailing location and selected colors for toilet compartment material.

E. Delegated Design Submittals: For grab bars mounted on toilet compartment panels, including analysis data signed and sealed by the qualified professional engineer responsible for their preparation.

1. Include structural design calculations indicating compliance with specified structural-performance requirements.

1.5 CLOSEOUT SUBMITTALS

A. Operation and Maintenance Data: For toilet compartments.

1.6 MAINTENANCE MATERIAL SUBMITTALS

A. Extra Stock Materials: Furnish extra materials to Owner that match products installed and that are packaged with protective covering for storage and identified with labels describing contents.

1. Door Hinges: One (1) hinge with associated fasteners.
2. Latch and Keeper: One (1) latch and keeper with associated fasteners.
3. Door Bumper: One (1) bumper with associated fasteners.
4. Door Pull: One (1) door pull with associated fasteners.
5. Fasteners: Ten (10) fasteners of each size and type.

1.7 FIELD CONDITIONS

A. Field Measurements: Verify actual locations of toilet fixtures, walls, columns, ceilings, and other construction contiguous with toilet compartments by field measurements, and coordinate before fabrication.

1.8 WARRANTY

A. Special Warranty: Manufacturer agrees to repair or replace components of compartments that fail in materials or workmanship within specified warranty period.

1. Failures include, but are not limited to, the following:

a. Deterioration of finishes beyond normal weathering.
b. Separation or delamination of materials and components.

2. Warranty Period: Fifteen (15) years from date of Substantial Completion.

PART 2 - PRODUCTS

2.1 SOURCE LIMITATIONS

A. Obtain plastic toilet compartments from single source from single manufacturer.

2.2 PERFORMANCE REQUIREMENTS

A. Fire Performance: Tested in accordance with, and pass the acceptance criteria of, NFPA 286.

B. Structural Performance: Where grab bars are mounted on toilet compartments, design panels to comply with the following requirements:

1. Panels are able to withstand a concentrated load on grab bar of at least 250 lbf applied at any direction and at any point, without deformation of panel.

C. Regulatory Requirements: Comply with applicable provisions in ICC A117.1 for toilet compartments designated as accessible.

2.3 SOLID-PLASTIC TOILET COMPARTMENTS

A. Basis-of-Design Product:

1. Scranton Products; **Hiny Hiders**

B. Manufacturers: Subject to compliance with requirements, available manufacturers offering products that may be incorporated into the Work include, but are not limited to, the following:

1. Accurate Partitions Corp.; an ASI Group Company
2. Metpar Corporation
3. PSiSC Columbia Partitions, a division of CSiSC
4. Substitutions: Under provisions of Section 012500 “Substitution Procedures”.

C. Toilet-Enclosure Style: Overhead braced**.**

D. Urinal-Screen Style: Wall hung.

E. Door, Panel, and Pilaster Construction: Solid, high-density polyethylene (HDPE) material, not less than 1-inch-thick, seamless, with eased edges, and with homogenous color and pattern throughout thickness of material.

1. Heat-Sink Strip: Manufacturer's standard continuous, extruded-aluminum or stainless-steel strip fastened to exposed bottom edges of solid-plastic components to hinder malicious combustion.
2. Color and Pattern: **TP**, as indicated in Section 090000 “Schedule of Finishes”.

F. Urinal-Screen Construction: Matching panel construction.

G. Pilaster Shoes and Sleeves (Caps): Manufacturer's standard design; stainless-steel.

H. Urinal-Screen Post: Manufacturer's standard post design of 1¾-inch-square, aluminum tube with satin finish; with shoe and sleeve (cap) matching that on the pilaster.

I. Brackets (Fittings):

1. Stirrup Type: Heavy-duty ear or U-brackets; stainless-steel.

2.4 HARDWARE AND ACCESSORIES

A. Hardware and Accessories, Heavy-Duty: Manufacturer's heavy-duty institutional operating hardware and accessories.

1. Hinges: Manufacturer's minimum 0.062-inch-thick stainless-steel self-closing, continuous, cam type that swings to a closed or partially open position, allowing emergency access by lifting door. Mount with through-bolts.
2. Latch and Keeper: Manufacturer's heavy-duty surface-mounted cast-stainless-steel latch unit designed to resist damage due to slamming, with combination rubber-faced door strike and keeper, and with provision for emergency access. Provide units that comply with regulatory requirements for accessibility at toilet enclosures designated as accessible. Mount with through-bolts.
3. Coat Hook: Manufacturer's heavy-duty combination cast-stainless-steel hook and rubber-tipped bumper, sized to prevent in-swinging door from hitting compartment-mounted accessories. Mount with through-bolts.
4. Door Bumper: Manufacturer's heavy-duty rubber-tipped cast-stainless-steel bumper at out-swinging doors. Mount with through-bolts.
5. Door Pull: Manufacturer's heavy-duty cast-stainless-steel pull at out-swinging doors that complies with regulatory requirements for accessibility. Provide units on both sides of doors at compartments designated as accessible. Mount with through-bolts.

B. Overhead Bracing: Manufacturer's standard continuous, extruded-aluminum head rail with anti-grip profile and in manufacturer's standard finish.

C. Anchorages and Fasteners: Manufacturer's standard exposed fasteners of stainless steel, finished to match the items they are securing, with theft-resistant-type heads. Provide barrel bolts for through-bolt applications. For concealed anchors, use stainless-steel, hot-dip galvanized-steel, or other rust-resistant, protective-coated steel compatible with related materials.

2.5 MATERIALS

A. Aluminum Castings: ASTM B 26.

B. Aluminum Extrusions: ASTM B 221.

C. Stainless-Steel Sheet: ASTM A 666, Type 304, stretcher-leveled standard of flatness.

D. Stainless-Steel Castings: ASTM A 743.

2.6 FABRICATION

A. Fabricate toilet compartment components to sizes indicated. Coordinate requirements and provide cutouts for through-partition toilet accessories where required for attachment of toilet accessories.

B. Overhead-Braced Units: Provide manufacturer's standard corrosion-resistant supports, leveling mechanism, and anchors at pilasters and walls to suit floor and wall conditions. Provide shoes at pilasters to conceal supports and leveling mechanism.

C. Urinal-Screen Posts: Manufacturer's standard corrosion-resistant anchoring assemblies at posts and walls, with leveling adjustment nuts at bottoms of posts. Provide shoes and sleeves (caps) at posts to conceal anchorage.

D. Door Size and Swings: Unless otherwise indicated, provide 24-inch-wide, in-swinging doors for standard toilet enclosures and 36-inch-wide, out-swinging doors with a minimum 32-inch-wide, clear opening for toilet enclosures designated as accessible.

PART 3 - EXECUTION

3.1 EXAMINATION

A. Examine areas and conditions, with Installer present, for compliance with requirements for fastening, support, alignment, operating clearances, and other conditions affecting performance of the Work.

1. Confirm location and adequacy of blocking and supports required for installation.

B. Proceed with installation only after unsatisfactory conditions have been corrected.

3.2 INSTALLATION

A. General: Comply with manufacturer's written installation instructions. Install units rigid, straight, level, and plumb. Secure units in position with manufacturer's recommended anchoring devices.

1. Maximum Clearances:

a. Pilasters and Panels or Screens: ½-inch.
b. Panels or Screens and Walls: 1-inch.

2. Stirrup Brackets: Secure panels or screens to walls and to pilasters with no fewer than three (3) brackets attached at midpoint and near top and bottom of panel.

a. Locate wall brackets so holes for wall anchors occur in masonry or tile joints.
b. Align brackets at pilasters with brackets at walls.

B. Overhead-Braced Units: Secure pilasters to floor and level, plumb, and tighten. Set pilasters with anchors penetrating not less than 1¾ inches into structural floor unless otherwise indicated in manufacturer's written instructions. Secure continuous head rail to each pilaster with no fewer than two (2) fasteners. Hang doors to align tops of doors with tops of panels and adjust so tops of doors are parallel with overhead brace when doors are in closed position.

1. All escutcheon seams to not be visible from the outside of the stall.

C. Urinal Screens: Attach with anchoring devices to suit supporting structure. Set units level and plumb, rigid, and secured to resist lateral impact.

3.3 ADJUSTING

A. Hardware Adjustment: Adjust and lubricate hardware in accordance with hardware manufacturer's written instructions for proper operation. Set hinges on in-swinging doors to hold doors open approximately 30 degrees from closed position when unlatched, unless the compartment is designated as accessible, where the doors are to return to fully closed position. Set hinges on out-swinging doors to return doors to fully closed position.

END OF SECTION 102113.19

SECTION 102239 - FOLDING PANEL PARTITIONS

PART 1 - GENERAL

1.1 RELATED DOCUMENTS

A. Drawings and general provisions of the Contract, including General and Supplementary Conditions and Division 01 Specification Sections, apply to this Section.

1.2 SUMMARY

A. Section Includes:

1. Electrically operated, acoustical panel partitions.

B. Related Requirements:

1. Section 055000 "Metal Fabrications" for supports that attach supporting tracks to overhead structural system.
2. Electrical and communications Sections for electrical service and connections for motor operators, controls, and limit switches and for system disconnect switches.

1.3 DEFINITIONS

A. STC: Sound Transmission Class.

1.4 PREINSTALLATION MEETINGS

A. Preinstallation Conference: Conduct conference at Project site.

1.5 ACTION SUBMITTALS

A. Product Data: For each type of product.

B. Shop Drawings: For operable panel partitions.

1. Include plans, elevations, sections, attachment details, and numbered panel installation sequence.
2. Indicate stacking and operating clearances. Indicate location and installation requirements for hardware and track, blocking, and direction of travel.
3. Include diagrams for power, signal, and control wiring.

C. Samples: For each type of exposed material, finish, covering, or facing.

1. Include Samples of accessories involving color selection.

D. Delegated-Design Submittal: For operable panel partitions.

1. Include design calculations for seismic restraints that brace tracks to structure above.

1.6 INFORMATIONAL SUBMITTALS

A. Coordination Drawings: Reflected ceiling plans, drawn to scale, on which the following items are shown and coordinated with each other, using input from installers of the items involved:

1. Partition track, track supports and bracing, switches, turning space, and storage layout.
2. Suspended ceiling components.
3. Structural members to which suspension systems will be attached.
4. Size and location of initial access modules for acoustical tile.
5. Items penetrating finished ceiling including the following:

a. Lighting fixtures.
b. HVAC ductwork, outlets, and inlets.
c. Speakers.
d. Sprinklers.
e. Smoke detectors.
f. Access panels.

B. Setting Drawings: For embedded items and cutouts required in other work, including support-beam, mounting-hole template.

C. Qualification Data: For Installer.

D. Seismic Qualification Certificates: For operable panel partitions, tracks, accessories, and components, from manufacturer. Include seismic capacity of partition assemblies to remain in vertical position during a seismic event and the following:

1. Basis for Certification: Indicate whether certification is based on analysis, testing, or experience data, according to ASCE/SEI 7.
2. Detailed description of partition anchorage devices on which the certification is based and their installation requirements.

E. Product Certificates: For each type of operable panel partition.

F. Product Test Reports: For each operable panel partition, for tests performed by a qualified testing agency.

G. Sample Warranty: For manufacturer's special warranty.

1.7 CLOSEOUT SUBMITTALS

A. Operation and Maintenance Data: For operable panel partitions to include in maintenance manuals.

1. In addition to items specified in Section 017823 "Operation and Maintenance Data," include the following:

a. Panel finish facings and finishes for exposed trim and accessories. Include precautions for cleaning materials and methods that could be detrimental to finishes and performance.
b. Seals, hardware, track, track switches, carriers, and other operating components.

c. Electric operator and controls.

1.8 MAINTENANCE MATERIAL SUBMITTALS

A. Furnish extra materials, from the same production run, that match products installed and that are packaged with protective covering for storage and identified with labels describing contents.

1. Panel Finish-Facing Material: Furnish full width in quantity to cover both sides of two (2) panels when installed.

1.9 QUALITY ASSURANCE

A. Installer Qualifications: An entity that employs installers and supervisors who are trained and approved by manufacturer.

1.10 DELIVERY, STORAGE, AND HANDLING

A. Protectively package and sequence panels in order for installation. Clearly mark packages and panels with numbering system used on Shop Drawings. Do not use permanent markings on panels.

1.11 WARRANTY

A. Special Warranty: Manufacturer agrees to repair or replace components of operable panel partitions that fail in materials or workmanship within specified warranty period.

1. Failures include, but are not limited to, the following:

a. Faulty operation of operable panel partitions.
b. Deterioration of metals, metal finishes, and other materials beyond normal use.

2. Warranty Period:

a. Partitions System: Two (2) years from date of Substantial Completion.
b. Suspension System: Ten (10) years from date of Substantial Completion.
c. Standard Hinges: Lifetime from date of Substantial Completion.

PART 2 - PRODUCTS

2.1 PERFORMANCE REQUIREMENTS

A. Delegated Design: Engage a qualified professional engineer, as defined in Section 014000 "Quality Requirements," to design seismic bracing of tracks to structure above.

B. Seismic Performance: Operable panel partitions shall withstand the effects of earthquake motions determined according to ASCE/SEI 7.

1. The term "withstand" means "the partition panels will remain in place without separation of any parts when subjected to the seismic forces specified."

C. Acoustical Performance: Provide operable panel partitions tested by a qualified testing agency for the following acoustical properties according to test methods indicated:

1. Sound-Transmission Requirements: Operable panel partition assembly tested for laboratory sound-transmission loss performance according to ASTM E 90, determined by ASTM E 413, and rated for not less than the STC indicated.

D. Fire-Test-Response Characteristics: Provide panels with finishes complying with one (1) of the following as determined by testing identical products by a testing and inspecting agency acceptable to authorities having jurisdiction:

1. Surface-Burning Characteristics: Comply with ASTM E 84; testing by a qualified testing agency. Identify products with appropriate markings of applicable testing agency.

a. Flame-Spread Index: 25 or less.
b. Smoke-Developed Index: 450 or less.

2. Fire Growth Contribution: Complying with acceptance criteria of local code and authorities having jurisdiction when tested according to NFPA 265 Method B Protocol or NFPA 286.

E. Electrical Components, Devices, and Accessories: Listed and labeled as defined in NFPA 70, by a qualified testing agency, and marked for intended location and application.

2.2 OPERABLE ACOUSTICAL PANELS

A. Operable Acoustical Panels: Partition system, including panels, seals, finish facing, suspension system, operators, and accessories.

1. Basis-of-Design Product:

a. Modernfold, Inc.; a dormakaba Group company; **Acousti-Seal Legacy Electric**

2. Manufacturers: Subject to compliance with requirements, available manufacturers offering products that may be incorporated into the Work include, but are not limited to, the following:

a. Hufcor Inc.
b. KWIK-WALL Company
c. Moderco Inc.
d. Panelfold Inc.
e. Substitution: Under provisions of Section 012500 “Substitution Procedures”.

B. Panel Operation: Electrically operated, continuously hinged panels.

C. Panel Construction: As required to support panel from suspension components and with reinforcement for hardware attachment. Fabricate panels with tight hairline joints and concealed fasteners. Fabricate panels so finished in-place partition is rigid; level; plumb; aligned, with tight joints and uniform appearance; and free of bow, warp, twist, deformation, and surface and finish irregularities.

D. Dimensions: Fabricate operable acoustical panel partitions to form an assembled system of dimensions indicated and verified by field measurements.

1. Panel Width: Standard widths.

E. STC: Not less than 52.

F. Panel Weight: 11 lbs./sq. ft. maximum.

G. Panel Thickness: Nominal dimension of 3 inches.

H. Panel Materials:

1. Steel Frame: Steel sheet, 16-gauge nominal minimum thickness for uncoated steel.
2. Steel Face/Liner Sheets: Tension-leveled steel sheet, 21-gauge minimum nominal thickness for uncoated steel.

I. Panel Closure: Manufacturer's standard unless otherwise indicated.

J. Hardware: Manufacturer's standard as required to operate operable panel partition and accessories; with decorative, protective finish.

1. Hinges: Manufacturer's standard.

K. Finish Facing: Fabric wall covering.

2.3 SEALS

A. Description: Seals that produce operable panel partitions complying with performance requirements and the following:

1. Manufacturer's standard seals unless otherwise indicated.
2. Seals made from materials and in profiles that minimize sound leakage.
3. Seals fitting tight at contact surfaces and sealing continuously between adjacent panels and between operable panel partition perimeter and adjacent surfaces, when operable panel partition is extended and closed.

B. Vertical Seals: Deep-nesting, interlocking astragals mounted on each edge of panel, with continuous, resilient acoustical seal.

C. Horizontal Top Seals: Continuous-contact, resilient seal exerting uniform constant pressure on track.

D. Horizontal Bottom Seals: Resilient, mechanical, retractable, constant-force-contact seal exerting uniform constant pressure on floor when extended, ensuring horizontal and vertical sealing and resisting panel movement.

1. Automatically Operated for Acoustical Panels: Extension and retraction of bottom seal automatically operated by movement of partition, with operating range not less than 1½ inches between retracted seal and floor finish.

2.4 PANEL FINISH FACINGS

A. Description: Finish facings for panels that comply with indicated fire-test-response characteristics and that are factory applied to operable panel partitions with appropriate backing, using mildew-resistant non-staining adhesive as recommended by facing manufacturer's written instructions.

1. Apply one-piece, seamless facings free of air bubbles, wrinkles, blisters, and other defects, with invisible seams complying with Shop Drawings for location, and with no gaps or overlaps. Horizontal seams are not permitted. Tightly secure and conceal raw and selvage edges of facing for finished appearance.
2. Where facings with directional or repeating patterns or directional weave are indicated, mark facing top and attach facing in same direction.
3. Match facing pattern 72 inches above finished floor.

B. Fabric Wall Covering: Manufacturer's standard fabric, from same dye lot, treated to resist stains.

1. Color/Pattern: **WC-2**, as indicated in Section 090000 “Schedule of Finishes”.

C. Cap-Trimmed Edges: Protective perimeter-edge trim with tight hairline joints concealing edges of panel and finish facing, finished as follows:

1. Steel, Painted: Finished with manufacturer's color as selected by Architect and Owner from manufacturer's entire range.

2.5 SUSPENSION SYSTEMS

A. Tracks: Steel mounted directly to overhead structural support, with adjustable steel hanger rods for overhead support, designed for operation, size, and weight of operable panel partition indicated. Size track to support partition operation and storage without damage to suspension system, operable panel partitions, or adjacent construction. Limit track deflection to no more than 0.10-inch between bracket supports. Provide a continuous system of track sections and accessories to accommodate configuration and layout indicated for partition operation and storage.

1. Panel Guide: Aluminum guide on both sides of the track to facilitate straightening of the panels; finished with factory-applied, decorative, protective finish.
2. Head Closure Trim: As required for acoustical performance; with factory-applied, decorative, protective finish.

B. Carriers: Trolley system as required for configuration type, size, and weight of partition and for easy operation; with ball-bearing wheels.

1. Multidirectional Carriers: Capable of negotiating intersections without track switches.

C. Track Intersections, Switches, and Accessories: As required for operation, storage, track configuration, and layout indicated for operable panel partitions, and compatible with partition assembly specified. Fabricate track intersections and switches from steel.

D. Steel Finish: Manufacturer's standard, factory-applied, corrosion-resistant, protective coating unless otherwise indicated.

2.6 ELECTRIC OPERATORS

A. Factory-assembled electric operation system of size and capacity recommended and provided by operable panel partition manufacturer for partition specified; with electric motor and factory-prewired motor controls, speed reducer, chain drive, control stations, control devices, and accessories required for operation. Include wiring from control stations to motor. Coordinate operator wiring requirements and electrical characteristics with building electrical system.

B. Comply with NFPA 70.

C. Control Equipment: Comply with NEMA ICS 1, NEMA ICS 2, and NEMA ICS 6.

D. Motor Electrical Characteristics:

1. Horsepower: 1½.
2. Volts: 208.
3. Phase: Polyphase.
4. Hertz: 60.

E. Control Stations: Two (2) single-key-operated, constant-pressure control stations located remotely from each other on opposite sides and opposite ends of partition run. Wire in series to require simultaneous activation of both key stations to operate partition. Each three-position control station labeled "Open," "Close," and "Stop." Furnish two (2) keys per station.

F. Obstruction-Detection Devices: Equip each motorized operable panel partition with indicated automatic safety sensor that causes operator to immediately stop and reverse direction.

1. Sensor Edge: Contact-pressure-sensitive safety edge along partition's leading edge.
2. Sensor Mat: Electrically operated, contact-weight-sensitive safety mat in storage pocket area.

G. Limit Switches: Adjustable switches, interlocked with motor controls and set to automatically stop operable panel partition at fully extended and fully stacked positions.

H. Emergency Release Mechanism: Quick disconnect-release of electric-motor drive system, permitting manual operation in event of operating failure.

I. Electric Interlock: Equip each motorized operable panel partition with electric interlocks at locations indicated, to prevent operation of operable panel partition under the following conditions:

1. On storage pocket door, to prevent operation if door is not in fully open position.

2.7 ACCESSORIES

A. Storage Pocket Door: Full height at end of partition runs to conceal stacked partition; of same materials, finish, construction, thickness, and acoustical qualities as panels; complete with operating hardware and acoustical seals at soffit, floor, and jambs. Hinges in finish to match other exposed hardware.

1. Manufacturer's standard method to secure storage pocket door in closed position.

PART 3 - EXECUTION

3.1 EXAMINATION

A. Examine flooring, floor levelness, structural support, and opening, with Installer present, for compliance with requirements for installation tolerances and other conditions affecting performance of operable panel partitions.

B. Proceed with installation only after unsatisfactory conditions have been corrected.

3.2 INSTALLATION

A. Install operable panel partitions and accessories after other finishing operations, including painting, have been completed in area of partition installation.

B. Install panels in numbered sequence indicated on Shop Drawings.

C. Broken, cracked, chipped, deformed, or unmatched panels are not acceptable.

D. Broken, cracked, deformed, or unmatched gasketing or gasketing with gaps at butted ends is not acceptable.

E. Light-Leakage Test: Illuminate one (1) side of partition installation and observe vertical joints and top and bottom seals for voids. Adjust partitions for alignment and full closure of vertical joints and full closure along top and bottom seals.

3.3 ADJUSTING

A. Adjust operable panel partitions, hardware, and other moving parts to function smoothly, and lubricate as recommended by manufacturer.

B. Adjust storage pocket doors to operate smoothly and easily, without binding or warping.

C. Verify that safety devices are properly functioning.

3.4 DEMONSTRATION

A. Engage a factory-authorized service representative to train Owner's maintenance personnel to adjust, operate, and maintain operable panel partitions.

END OF SECTION 102239

SECTION 102600 - WALL AND DOOR PROTECTION

PART 1 - GENERAL

1.1 RELATED DOCUMENTS

A. Drawings and general provisions of the Contract, including General and Supplementary Conditions and Division 01 Specification Sections, apply to this Section.

1.2 SUMMARY

A. Section Includes:

1. Impact-resistant handrails.
2. Impact-resistant wall coverings.

B. Related Requirements:

1. Section 087100 "Door Hardware" for metal armor, kick, mop, and push plates.

1.3 ACTION SUBMITTALS

A. Product Data: For each type of product.

1. Include construction details, material descriptions, impact strength, dimensions of individual components and profiles, and finishes.

B. Shop Drawings: For each type of wall protection showing locations and extent.

1. Include plans, elevations, sections, and attachment details. Show handrail design and support spacing required to withstand structural loads.

C. Samples: For each type of exposed finish on the following products, prepared on Samples of size indicated below.

1. Handrails: 12 inches long. Include examples of joinery, corners, and field splices.
2. Impact-Resistant Wall Covering: 6 by 6 inches square.

1.4 INFORMATIONAL SUBMITTALS

A. Qualifications: For Installer and Manufacturer.

B. Product Certificates: For each type of handrail.

C. Material Certificates: For each type of exposed plastic material.

D. Sample Warranty: For special warranty.

1.5 CLOSEOUT SUBMITTALS

A. Maintenance Data: For each type of wall protection product to include in maintenance manuals.

1. Include recommended methods and frequency of maintenance for maintaining best condition under anticipated traffic and use conditions. Include precautions against using cleaning materials and methods that may be detrimental to finishes and performance.

1.6 MAINTENANCE MATERIAL SUBMITTALS

A. Furnish extra materials, from the same product run, that match products installed and that are packaged with protective covering for storage and identified with labels describing contents.

1. Mounting and Accessory Components: Amounts proportional to the quantities of extra materials. Package mounting and accessory components with each extra material.

1.7 QUALITY ASSURANCE

A. Installer Qualifications: Engage an installer who has no less than three (3) years' experience in installation of systems similar in complexity to those required for this project.

B. Manufacturer's Qualifications: Not less than five (5) years' experience in the production of specified products and a record of successful in-service performance.

1.8 DELIVERY, STORAGE, AND HANDLING

A. Store wall protection in original undamaged packages and containers inside well-ventilated area protected from weather, moisture, soiling, extreme temperatures, and humidity.

1. Maintain room temperature within storage area at not less than 50 70 deg F (21 deg C) during the period plastic materials are stored.
2. Keep plastic materials out of direct sunlight.
3. Store plastic wall protection components for a minimum of 48 72 hours, or until plastic material attains a minimum room temperature of 50 70 deg F (21 deg C).

a. Store handrail and wall coverings in a horizontal position.

4. Do not install if relative humidity is greater than eighty percent (80%)

1.9 WARRANTY

A. Special Warranty: Manufacturer agrees to repair or replace components of impact-resistant wall protection units that fail in materials or workmanship within specified warranty period.

1. Failures include, but are not limited to, the following:

a. Structural failures including detachment of components from each other or from the substrates, delamination, and permanent deformation beyond normal use.
b. Deterioration of metals, metal finishes, plastics, and other materials beyond normal use.

2. Warranty Period: One (1) year from date of Substantial Completion.

PART 2 - PRODUCTS

2.1 MANUFACTURERS

A. Manufacturers: Subject to compliance with requirements, available manufacturers offering products that may be incorporated into the Work include, but are not limited to, the following:

1. Altro USA
2. Commercial Corner Guards
3. Construction Specialties, Inc.
4. IPC Door and Wall Protection Systems; Division of InPro Corporation
5. Korogard Wall Protection Systems; a division of RJF International Corporation
6. Level Digital Wallcoverngs
7. Marlite, Inc., a division of Nudo Products, Inc.
8. Pawling Corporation
9. Substitutions: Under provisions of Section 012500 “Substitution Procedures”.

B. Source Limitations: Obtain wall protection products of each type from single source from single manufacturer.

2.2 PERFORMANCE REQUIREMENTS

A. Surface Burning Characteristics: Comply with ASTM E 84 or UL 723; testing by a qualified testing agency. Identify products with appropriate markings of applicable testing agency.

1. Flame-Spread Index: 25 or less.
2. Smoke-Developed Index: 450 or less.

B. Regulatory Requirements: Comply with applicable provisions in ICC A117.1.

2.3 IMPACT-RESISTANT HANDRAILS

A. Structural Performance: Handrails, including attachment to building construction, shall withstand the effects of gravity loads and the following loads and stresses within limits and under conditions indicated:

1. Uniform load of 50 lbf./ft. applied in any direction.
2. Concentrated load of 200 lbf. applied in any direction.
3. Uniform and concentrated loads need not be assumed to act concurrently.

B. Wood Handrail with Bumper: Manufacturer's standard assembly consisting of continuous sculpted, solid-wood handrail, with bumper insert installed in continuous retainer recessed into the face of the wood.

1. Basis-of-Design: **Construction Specialties HRW-20**
2. Wood Handrail: As indicated on Drawings with 1½-inch-diameter gripping surface.

a. End Caps, Returns, Corners, and Mounting Brackets: Solid wood that matches rail.
b. Wood Species: Maple.
c. Finish: ainted.
d. Color: **WDC**, as indicated in Section 090000 “Schedule of Finishes”.

3. Retainer: Minimum 0.0625-inch-thick, one-piece, extruded aluminum.

   a. Finish: Mill.

4. Accessories: Concealed splices and mounting hardware.

2.4 IMPACT-RESISTANT WALL COVERINGS

A. Impact-Resistant Sheet Wall Covering: Fabricated from pre-finished polyester glass reinforced plastic sheets.

1. Basis-of-Design: **Marlite Standard FRP, Symmetrix SmartSeam FRP**
2. Height: Full wall, unless otherwise indicated.
3. Trim and Joint Moldings: Extruded rigid plastic that matches sheet wall covering color.
4. Mounting: Adhesive.
5. Size, Sheet Thickness, Color, and Texture: **FRP**, as indicated in Section 090000 "Schedule of Finishes".

B. Impact-Resistant Sheet Wall Covering: Fabricated from PVC plastic sheet material.

1. Basis-of-Design: **Altro Puraguard**
2. Sheet Thickness: Minimum 0.08-inch.
3. Height: Full wall, unless otherwise indicated.
4. Trim and Joint Moldings: Extruded rigid plastic that matches sheet wall covering color.
5. Mounting: Adhesive.
6. Size, Color, and Texture: **WP-1**, as indicated in Section 090000 "Schedule of Finishes".

2.5 MATERIALS

A. Plastic Materials: Chemical- and stain-resistant, fiberglass reinforced thermosetting polyester panel sheets complying with ASTM D 5319, thickness as indicated. Resistant to rot, corrosion, staining, denting, peeling, and splintering. Coated with sanitary sealer with water-based coatings and controlled, low-temperature inline curing.

1. Flexural Strength: 0.9×10^4 psi per ASTM D 790.
2. Flexural Modulus: 6.0×10^6 psi per ASTM D 790.
3. Tensile Strength: 11.5×10^3 psi per ASTM D 638.
4. Tensile Modulus: 0.45×10^6 psi per ASTM D 638.
5. Water Absorption: 0.15% per ASTM D 570.
6. Barcol Hardness (Scratch Resistance): 28 as per ASTM D 2583.
7. Izod Impact Strength: 6 ft. lbs./in ASTM D 256.
8. Mold and Mildew: Pass per ASTM D 3273.

B. PVC Plastic: ASTM D 1784, Class 1, textured, chemical- and stain-resistant, high-impact-resistant PVC or acrylic-modified vinyl plastic with integral color throughout; extruded and sheet material, thickness as indicated.

1. Impact Resistance: Minimum 25.4 ft-lbf/in. of notch when tested according to ASTM D 256, Test Method A.
2. Chemical and Stain Resistance: Tested according to ASTM D 543 or ASTM D 1308.
3. Self-extinguishing when tested according to ASTM D 635.

4. Flame-Spread Index: 25 or less.
5. Smoke-Developed Index: 450 or less.

C. Solid Wood: Clear hardwood lumber of species indicated, free of appearance defects, and selected for compatible grain and color.

D. Fasteners: Aluminum, nonmagnetic stainless-steel, or other noncorrosive metal screws, bolts, and other fasteners compatible with items being fastened. Use security-type fasteners where exposed to view.

E. Adhesive: As recommended by protection product manufacturer and with a VOC content of 70 g/L or less when calculated according to 40 CFR 59, Subpart D (EPA Method 24).

F. Sealants: As recommended by protection product manufacturer and as specified in Section 079200 "Joint Sealants".

2.6 FABRICATION

A. Fabricate wall protection according to requirements indicated for design, performance, dimensions, and member sizes, including thicknesses of components.

B. Factory Assembly: Assemble components in factory to greatest extent possible to minimize field assembly. Disassemble only as necessary for shipping and handling.

C. Quality: Fabricate components with uniformly tight seams and joints and with exposed edges rolled. Provide surfaces free of wrinkles, chips, dents, uneven coloration, and other imperfections. Fabricate members and fittings to produce flush, smooth, and rigid hairline joints.

D. Wood Handrails: Miter corners and ends of wood handrails for returns.

PART 3 - EXECUTION

3.1 EXAMINATION

A. Examine substrates and wall areas, with Installer present, for compliance with requirements for installation tolerances and other conditions affecting performance of work.

B. Examine walls to which wall protection will be attached for blocking, grounds, and other solid backing that have been installed in the locations required for secure attachment of support fasteners.

1. For wall protection attached with adhesive, verify compatibility with and suitability of substrates, including compatibility with existing finishes or primers.

C. Proceed with installation only after unsatisfactory conditions have been corrected.

3.2 PREPARATION

A. Complete finishing operations, including painting, before installing wall protection.

B. Before installation, clean substrate to remove dust, debris, and loose particles.

C. Allow wall protection and adhesive to precondition for a minimum of 24 hours at a temperature between 65 deg F and 75 deg F before installation.

3.3 INSTALLATION

A. Installation Quality: Install wall protection according to manufacturer's written instructions, level, plumb, and true to line without distortions. Do not use materials with chips, cracks, voids, stains, or other defects that might be visible in the finished Work.

B. Mounting Heights: Install wall protection in locations and at mounting heights indicated on Drawings.

C. Accessories: Provide splices, mounting hardware, anchors, trim, joint moldings, and other accessories required for a complete installation.

1. Provide anchoring devices and suitable locations to withstand imposed loads.
2. Adjust end and top caps as required to ensure tight seams.

D. Impact-Resistant Wall Covering: Install top and edge moldings, corners, and divider bars as required for a complete installation.

3.4 CLEANING

A. Immediately after completion of installation, clean in accordance with manufacturer’s instructions.

B. Remove excess adhesive using methods and materials recommended in writing by manufacturer.

END OF SECTION 102600

SECTION 102800 - TOILET, BATH, AND LAUNDRY ACCESSORIES

PART 1 - GENERAL

1.1 RELATED DOCUMENTS

A. Drawings and general provisions of the Contract, including General and Supplementary Conditions and Division 01 Specification Sections, apply to this Section.

1.2 SUMMARY

A. Section Includes:

1. Public-use washroom accessories.
2. Private-use bathroom accessories.
3. Hand dryers.
4. Childcare accessories.
5. Custodial accessories.

B. Related Sections:

1. Section 061000 “Rough Carpentry” for blocking coordination.
2. Section 088300 "Mirrors" for frameless mirrors.

1.3 COORDINATION

A. Coordinate accessory locations with other work to prevent interference with clearances required for access by people with disabilities, and for proper installation, adjustment, operation, cleaning, and servicing of accessories.

B. Deliver inserts and anchoring devices set into concrete or masonry as required to prevent delaying the Work.

1.4 ACTION SUBMITTALS

A. Product Data: For each type of product.

1. Include construction details, material descriptions, dimensions of individual components and profiles, and finishes.
2. Include anchoring and mounting requirements, including requirements for cutouts in other work and substrate preparation.
3. Include electrical characteristics.

B. Samples: Full size, for each exposed product and for each finish specified.

1. Approved full-size Samples will be returned and may be used in the Work.

C. Product Schedule: Indicating types, quantities, sizes, and installation locations by room of each accessory required.

1. Identify locations using room designations indicated.

1.5 INFORMATIONAL SUBMITTALS

A. Sample Warranty: For manufacturer's special warranties.

1.6 CLOSEOUT SUBMITTALS

A. Maintenance Data: For accessories to include in maintenance manuals.

1.7 WARRANTY

A. Manufacturer's Special Warranty for Mirrors: Manufacturer agrees to repair or replace mirrors that fail in materials or workmanship within specified warranty period.

1. Failures include, but are not limited to, visible silver spoilage defects.
2. Warranty Period: Fifteen (15) years from date of Substantial Completion.

B. Manufacturer's Special Warranty for Hand Dryers: Manufacturer agrees to repair or replace hand dryers that fail in materials or workmanship within specified warranty period.

1. Warranty Period: Limited, ten (10) years from date of Substantial Completion.

C. Manufacturer's Special Warranty for Childcare Accessories: Manufacturer agrees to repair or replace childcare accessories that fail in materials or workmanship within specified warranty period.

1. Warranty Period: Five (5) years from date of Substantial Completion.

PART 2 - PRODUCTS

2.1 MANUFACTURERS

A. Manufacturers: Subject to compliance with requirements, available manufacturers offering products that may be incorporated into the Work include, but are not limited to, the following:

1. A & J Washroom Accessories, Inc.
2. American Specialties, Inc.
3. Bobrick Washroom Equipment, Inc.
4. Bradley Corporation
5. Diaper Deck & Company, Inc.
6. Koala Kare Products; a division of Bobrick Washroom Equipment, Inc.
7. World Dryer Corporation
8. Substitutions: Under provisions of Section 012500 "Substitution Procedures".

B. Source Limitations: Obtain accessories from single source from single manufacturer.

2.2 PERFORMANCE REQUIREMENTS

A. Electrical Components, Devices, and Accessories: Listed and labeled as defined in NFPA 70, by a qualified testing agency, and marked for intended location and application.

B. Structural Performance: Design accessories and fasteners to comply with the following requirements:

1. Grab Bars: Installed units are able to resist 250-lbf concentrated load applied in any direction and at any point.

2.3 PUBLIC-USE WASHROOM ACCESSORIES

A. Toilet Tissue (Roll) Dispenser:

1. Basis-of-Design Product: **Bobrick #B-3588**
2. Description: Double roll dispenser.
3. Mounting: Surface mounted, where indicated.
4. Operation: Non-control delivery with theft-resistant spindle.
5. Capacity: Designed for 5-1/8-inch-diameter tissue rolls.
6. Material and Finish: Stainless-steel, No. 4 finish (satin).
7. Lockset: Tumbler type.

B. Combination Toilet Tissue Dispenser:

1. Basis-of-Design Product: **Bobrick #B-3094**
2. Description: Combination unit with double-roll toilet tissue dispenser and the following:

   a. Removable sanitary-napkin waste receptacle with self-closing, disposal-opening cover.

3. Mounting: Recessed.
4. Toilet Tissue Dispenser Capacity: 5¼-inch-diameter tissue rolls.
5. Toilet Tissue Dispenser Operation: Non-control delivery with theft-resistant spindles.
6. Material and Finish: Stainless-steel, No. 4 finish (satin).
7. Lockset: Tumbler type.

C. Paper Towel (Folded) Dispenser:

1. Basis-of-Design Product: **Bobrick #B-2621**
2. Mounting: Surface mounted.
3. Minimum Capacity: 200 C-fold or 275 multifold towels.
4. Material and Finish: Stainless-steel, No. 4 finish (satin).
5. Lockset: Tumbler type.
6. Refill Indicators: Pierced slots at sides or front.

E. Liquid-Soap Dispenser:

1. Basis-of-Design Product: **Bobrick #B-4112**
2. Description: Designed for dispensing soap in liquid or lotion form.
3. Mounting: Surface mounted.
4. Capacity: 40 oz.
5. Materials: Stainless-steel, No. 4 finish (satin) container and black molded plastic push button and spout.
6. Lockset: Special key provided.
7. Refill Indicator: Window type.

F. Grab Bar:

1. Basis-of-Design Product: **Bobrick #B-6806.99x18, x36 and x42**
2. Mounting: Flanges with concealed fasteners.
3. Material: Stainless-steel, 0.05-inch-thick.

   a. Finish: Smooth, No. 4 finish (satin) on ends and slip-resistant texture in grip area.

4. Outside Diameter: 1½ inches.
5. Configuration and Length: As indicated in the Drawings.

G. Sanitary-Napkin Disposal Unit:

1. Basis-of-Design Product: **Bobrick #B-270**
2. Mounting: Surface mounted.
3. Door or Cover: Self-closing, disposal-opening cover.
4. Receptacle: Removable.
5. Material and Finish: Stainless-steel, No. 4 finish (satin).
6. Locations: Female gang restrooms only.

H. Mirror Unit:

1. Basis-of-Design Product: **Bobrick #B-290-1836**
2. Frame: Stainless-steel angle, 0.05-inch-thick.

   a. Corners: Manufacturer's standard.

3. Size: 18x36.
4. Hangers: Manufacturer’s standard rigid, tamper- and theft-resistant installation.

I. Hook:

1. Basis-of-Design Product: **Bobrick #B-76717**
2. Description: Single-prong unit.
3. Mounting: Concealed.
4. Material and Finish: Stainless-steel, No. 4 finish (satin).
5. Location: On back of single use restroom doors.

2.4 HAND DRYERS

A. Warm-Air Dryer:

1. Basis-of-Design Product: **Bobrick #B-7128**
2. Description: Standard-speed, warm-air hand dryer.
3. Mounting: Surface mounted, with low-profile design.

   a. Protrusion Limit: Installed unit protrudes maximum 4 inches from wall surface.

4. Operation: Electronic-sensor activated with timed power cut-off switch.

   a. Automatic Shutoff: At 60 seconds, maximum.

5. Cover Material and Finish: Polycarbonate casing with anti-microbial additive in paint or stainless-steel; sprayed nickel finish or stainless-steel, No. 4 finish (satin).
6. Electrical Requirements: 110-120 V, 7-15 A, 770-1725 W, 50/60 Hz.

2.5 CHILDCARE ACCESSORIES

A. Diaper-Changing Station:

1. Basis-of-Design Product: **Koala #KB310-SSWM**
2. Description: Horizontal unit that opens by folding down from stored position and with child-protection strap.

   a. Engineered to support minimum of 200-lb. static load when opened.

3. Mounting: Surface mounted, with unit projecting not more than 4 inches from wall when closed.
4. Operation: By pneumatic shock-absorbing mechanism.
5. Material and Finish: Stainless-steel, ASTM A480 No. 4 finish (satin), exterior shell with rounded plastic corners; HDPE interior in manufacturer's standard color.
6. Liner Dispenser: Provide built-in dispenser for disposable sanitary liners.

2.6 CUSTODIAL ACCESSORIES

A. Custodial Mop and Broom Holder:

1. Basis-of-Design Product: **Bobrick #B-223x36**
2. Description: Unit with holders.
3. Length: 36 inches.
5. Mop/Broom Holders: Three (3), spring-loaded, rubber hat, cam type.
6. Material and Finish: Stainless-steel, ASTM A480 No. 4 finish (satin).

B. Hook:

1. Basis-of-Design Product: **Bobrick #B-2116**
2. Description: Single-prong unit.
3. Mounting: Concealed.
4. Material and Finish: Satin nickel-plated one-piece brass.
5. Location: Storage 141.

C. Hook:

1. Basis-of-Design Product: **Bobrick #B-6827**
2. Description: Combination hat and coat hook.
3. Mounting: Concealed.
4. Material and Finish: Stainless-steel, ASTM A 480 No. 4 finish (satin).
5. Location: Fitness Center 107 and Fitness Room 108.

2.7 MATERIALS

A. Stainless-Steel: ASTM A 240 or ASTM A 666, Type 304, 0.031-inch minimum nominal thickness unless otherwise indicated.

B. Brass: ASTM B 19, flat products; ASTM B 16, rods, shapes, forgings, and flat products with finished edges; or ASTM B 30, castings.

C. Steel Sheet: ASTM A 1008, Designation CS (cold rolled, commercial steel), 0.036-inch-minimum nominal thickness.

D. Galvanized-Steel Mounting Devices: ASTM A 153, hot-dip galvanized after fabrication.

E. Fasteners: Screws, bolts, and other devices of same material as accessory unit, unless otherwise recommended by manufacturer or specified in this Section, and tamper-and-theft resistant where exposed, and of galvanized steel where concealed.

F. Mirrors: ASTM C 1503, Mirror Glazing Quality, clear-glass mirrors, nominal ¼-inch-thick.

2.8 FABRICATION

A. General: Fabricate units with tight seams and joints, and exposed edges rolled. Hang doors and access panels with full-length, continuous hinges. Equip units for concealed anchorage and with corrosion-resistant backing plates.

PART 3 - EXECUTION

3.1 INSTALLATION

A. Install accessories in accordance with manufacturers' written instructions, using fasteners appropriate to substrate indicated and recommended by unit manufacturer. Install units level, plumb, and firmly anchored in locations and at heights indicated.

1. Remove temporary labels and protective coatings.

B. Grab Bars: Install to comply with specified structural-performance requirements.

3.2 ADJUSTING AND CLEANING

A. Adjust accessories for unencumbered, smooth operation. Replace damaged or defective items.

B. Clean and polish exposed surfaces according to manufacturer's written recommendations.

END OF SECTION 102800

SECTION 104413 - FIRE PROTECTION CABINETS

PART 1 - GENERAL

1.1 RELATED DOCUMENTS

A. Drawings and general provisions of the Contract, including General and Supplementary Conditions and Division 01 Specification Sections, apply to this Section.

1.2 SUMMARY

A. Section Includes:

1. Fire-protection cabinets for the following:

a. Portable fire extinguishers.

B. Related Requirements:

1. Section 104416 "Fire Extinguishers."

1.3 ACTION SUBMITTALS

A. Product Data: For each type of product.

1. Show door hardware, cabinet type, trim style, and panel style. Include roughing-in dimensions and details showing recessed-, semi-recessed-, or surface-mounting method and relationships of box and trim to surrounding construction.

B. Shop Drawings: For fire-protection cabinets.

1. Include plans, elevations, sections, details, and attachments to other work.

C. Samples: For each type of exposed finish required.

D. Product Schedule: For fire-protection cabinets. Indicate whether recessed, semi-recessed, or surface mounted. Coordinate final fire-protection cabinet schedule with fire-extinguisher schedule to ensure proper fit and function. Use same designations indicated on Drawings.

1.4 CLOSEOUT SUBMITTALS

A. Maintenance Data: For fire-protection cabinets to include in maintenance manuals.

1.5 COORDINATION

A. Coordinate size of fire-protection cabinets to ensure that type and capacity of fire extinguishers indicated are accommodated.

B. Coordinate sizes and locations of fire-protection cabinets with wall depths.

PART 2 - PRODUCTS

2.1 MANUFACTURERS

A. Source Limitations: Obtain fire-protection cabinets, accessories, and fire extinguishers from single source from single manufacturer.

2.2 FIRE-PROTECTION CABINET

A. Cabinet Type: Suitable for fire extinguisher.

1. Products: Subject to compliance with requirements, available products that may be incorporated into the Work include, but are not limited to, the following:

a. J. L. Industries, Inc., a division of Activar Construction Products Group; **Ambassador 1016**
b. Larsen's Manufacturing Company; **2409-R7**
c. Substitutions: Under provisions of Section 012500 “Substitution Procedures”.

B. Cabinet Construction: Nonrated.

C. Cabinet Material: Cold-rolled steel sheet.

D. Semi-Recessed Cabinet: One-piece combination trim and perimeter door frame overlapping surrounding wall surface with exposed trim face and wall return at outer edge (backbend).

1. Square-Edge Trim: 1¼- to 1½-inch backbend depth.

E. Cabinet Trim Material: Same material and finish as door.

F. Door Material: Steel sheet.

G. Door Style: Solid opaque panel with frame.

H. Door Hardware: Manufacturer's standard door-operating hardware of proper type for cabinet type, trim style, and door material and style indicated.

1. Provide projecting door pull and friction latch.
2. Provide continuous hinge, of same material and finish as trim, permitting door to open 180 degrees.

I. Accessories:

1. Mounting Bracket: Manufacturer's standard steel, designed to secure fire extinguisher to fire-protection cabinet, of sizes required for types and capacities of fire extinguishers indicated, with plated or baked-enamel finish.
2. Identification: Lettering complying with authorities having jurisdiction for letter style, size, spacing, and location. Locate as directed by Architect.

a. Identify fire extinguisher in fire-protection cabinet with the words "FIRE EXTINGUISHER."

1) Location: Applied to cabinet door.
2) Application Process: Pressure-sensitive vinyl letters.
3) Lettering Color: Black.
4) Orientation: Vertical.

3. Alarm: Manufacturer's standard alarm that actuates when fire-protection cabinet door is opened and that is powered by batteries.

J. Materials:

1. Cold-Rolled Steel: ASTM A 1008, Commercial Steel (CS), Type B.

a. Finish: Baked enamel or powder coat.
b. Color: As selected by Architect and Owner from manufacturer’s entire range.

2.3 FABRICATION

A. Fire-Protection Cabinets: Provide manufacturer's standard box (tub) with trim, frame, door, and hardware to suit cabinet type, trim style, and door style indicated.

1. Weld joints and grind smooth.
2. Provide factory-drilled mounting holes.
3. Prepare doors and frames to receive locks.

B. Cabinet Doors: Fabricate doors according to manufacturer's standards, from materials indicated and coordinated with cabinet types and trim styles.

1. Fabricate door frames with tubular stiles and rails and hollow-metal design, minimum ½-inch thick.
2. Miter and weld perimeter door frames and grind smooth.

C. Cabinet Trim: Fabricate cabinet trim in one (1) piece with corners mitered, welded, and ground smooth.

2.4 GENERAL FINISH REQUIREMENTS

A. Comply with NAAMM's AMP 500, "Metal Finishes Manual for Architectural and Metal Products," for recommendations for applying and designating finishes.

B. Protect mechanical finishes on exposed surfaces of fire-protection cabinets from damage by applying a strippable, temporary protective covering before shipping.

C. Finish fire-protection cabinets after assembly.

D. Appearance of Finished Work: Noticeable variations in same piece are unacceptable. Variations in appearance of adjoining components are acceptable if they are within the range of approved Samples and are assembled or installed to minimize contrast.

PART 3 - EXECUTION

3.1 EXAMINATION

A. Examine walls and partitions for suitable framing depth and blocking where semi-recessed cabinets will be installed.

B. Proceed with installation only after unsatisfactory conditions have been corrected.

3.2 PREPARATION

A. Prepare recesses for semi-recessed fire-protection cabinets as required by type and size of cabinet and trim style.

3.3 INSTALLATION

A. General: Install fire-protection cabinets in locations and at mounting heights indicated or, if not indicated, at heights acceptable to authorities having jurisdiction.

B. Fire-Protection Cabinets: Fasten cabinets to structure, square and plumb.

1. Fasten mounting brackets to inside surface of fire-protection cabinets, square and plumb.

C. Identification:

1. Apply vinyl lettering at locations indicated.
2. Apply vinyl lettering on field-painted fire-protection cabinets after painting is complete.

3.4 ADJUSTING AND CLEANING

A. Remove temporary protective coverings and strippable films, if any, as fire-protection cabinets are installed unless otherwise indicated in manufacturer's written installation instructions.

B. Adjust fire-protection cabinet doors to operate easily without binding. Verify that integral locking devices operate properly.

C. On completion of fire-protection cabinet installation, clean interior and exterior surfaces as recommended by manufacturer.

D. Touch up marred finishes or replace fire-protection cabinets that cannot be restored to factory-finished appearance. Use only materials and procedures recommended or furnished by fire-protection cabinet and mounting bracket manufacturers.

E. Replace fire-protection cabinets that have been damaged or have deteriorated beyond successful repair by finish touchup or similar minor repair procedures.

END OF SECTION 104413

SECTION 104416 - FIRE EXTINGUISHERS

PART 1 - GENERAL

1.1 RELATED DOCUMENTS

A. Drawings and general provisions of the Contract, including General and Supplementary Conditions and Division 01 Specification Sections, apply to this Section.

1.2 SUMMARY

A. Section includes portable, hand-carried fire extinguishers and mounting brackets for fire extinguishers.

B. Related Requirements:

1. Section 104413 "Fire Protection Cabinets."

1.3 ACTION SUBMITTALS

A. Product Data: For each type of product indicated. Include rating and classification, material descriptions, dimensions of individual components and profiles, and finishes for fire extinguisher and mounting brackets.

1.4 INFORMATIONAL SUBMITTALS

A. Warranty: Sample of special warranty.

1.5 CLOSEOUT SUBMITTALS

A. Operation and Maintenance Data: For fire extinguishers to include in maintenance manuals.

1.6 COORDINATION

A. Coordinate type and capacity of fire extinguishers with fire-protection cabinets to ensure fit and function.

1.7 WARRANTY

A. Special Warranty: Manufacturer's standard form in which manufacturer agrees to repair or replace fire extinguishers that fail in materials or workmanship within specified warranty period.

1. Failures include, but are not limited to, the following:

a. Failure of hydrostatic test according to NFPA 10.
b. Faulty operation of valves or release levers.

2. Warranty Period: Six (6) years from date of Substantial Completion.

PART 2 - PRODUCTS

2.1 PERFORMANCE REQUIREMENTS

A. NFPA Compliance: Fabricate and label fire extinguishers to comply with NFPA 10, "Portable Fire Extinguishers."

B. Fire Extinguishers: Listed and labeled for type, rating, and classification by an independent testing agency acceptable to authorities having jurisdiction.

1. Provide fire extinguishers approved, listed, and labeled by FMG.

2.2 PORTABLE, HAND-CARRIED FIRE EXTINGUISHERS

A. Fire Extinguishers: Type, size, and capacity for each fire-protection cabinet and mounted bracket indicated.

1. Manufacturers: Subject to compliance with requirements, available manufacturers offering products that may be incorporated into the Work include, but are not limited to, the following:

a. J. L. Industries, Inc.; a division of Activar Construction Products Group; **Cosmic 10E**
b. Larsen's Manufacturing Company; **MP10**
c. Substitutions: Under provisions of Section 012500 “Substitution Procedures”.

2. Source Limitations: Obtain fire extinguishers, fire-protection cabinets, and accessories, from single source from single manufacturer.
3. Valves: Manufacturer's standard.
4. Handles and Levers: Manufacturer's standard.
5. Instruction Labels: Include pictorial marking system complying with NFPA 10, Appendix B.

B. Multipurpose Dry-Chemical Type in Steel Container: UL-rated 4-A:80-B:C, 10-lb nominal capacity, with monoammonium phosphate-based dry chemical in enameled-steel container.

C. Saponifying-Agent Type (Class K) in Steel Container: UL-rated 2-A:1-B:C:K, 1.6-gal. nominal capacity, with saponifying alkaline agent such as potassium acetate, potassium citrate, or potassium carbonate. Saponifying agents combine with oils and fats to create a soapy foam on the surface, which holds in the vapors and extinguishes the fire.

1. Provide manual portable Class K fire extinguishers where indicated in Food Service Drawings, per the requirements of NFPA 96 to augment the kitchen hood fire suppression system, and in addition to other fire extinguishers required in accordance with NFPA 10, Standard for Portable Fire Extinguishers.

2.3 MOUNTING BRACKETS

A. Mounting Brackets: Manufacturer's standard steel, designed to secure fire extinguisher to wall or structure, of sizes required for types and capacities of fire extinguishers indicated, with plated or red baked-enamel finish.

PART 3 - EXECUTION

3.1 EXAMINATION

A. Examine fire extinguishers for proper charging and tagging.

1. Remove and replace damaged, defective, or undercharged fire extinguishers.

B. Proceed with installation only after unsatisfactory conditions have been corrected.

3.2 INSTALLATION

A. General: Install fire extinguishers and mounting brackets in locations indicated and in compliance with requirements of authorities having jurisdiction.

1. Mounting Brackets: 48 inches above finished floor to top of fire extinguisher.

B. Mounting Brackets: Fasten mounting brackets to surfaces, square and plumb, at locations indicated.

END OF SECTION 104416

SECTION 104513 - PHOTOLUMINESCENT EGRESS PATH MARKINGS

PART 1 - GENERAL

1.1 RELATED DOCUMENTS

A. Drawings and general provisions of the Contract, including General and Supplementary Conditions and Division 01 Specification Sections, apply to this Section.

1.2 SUMMARY

A. Section includes photoluminescent egress path markings.

1.3 ACTION SUBMITTALS

A. Product Data: For each type of product.

B. Shop Drawings: For photoluminescent egress path markings.

1. Include plans, elevations, and details.

C. Samples: For each exposed product and for each color and texture specified, 6 inches long or full size.

1.4 INFORMATIONAL SUBMITTALS

A. Product Test Reports: Based on evaluation of comprehensive tests performed by a qualified testing agency, for luminance level of photoluminescent egress path markings.

B. Sample Warranties: For special warranties.

1.5 WARRANTY

A. Manufacturer's Warranty: Manufacturer agrees to replace photoluminescent egress path markings that fail in materials or workmanship within specified warranty period.

1. Failure includes, but is not limited to, decline in luminance below specified brightness level.
2. Warranty Period: One (1) year from date of Substantial Completion.

PART 2 - PRODUCTS

2.1 PERFORMANCE REQUIREMENTS

A. Luminance: Comply with one (1) of the following; testing by a qualified testing agency:

1. UL 1994.

2. ASTM E 2072; except that the charging source is to be 1 foot-candle of fluorescent illumination for 60 minutes, and the minimum luminance is to be 30 millicandelas/sq. m after 10 minutes and 5 millicandelas/sq. m after 90 minutes.

2.2 PHOTOLUMINESCENT EGRESS PATH MARKINGS

A. Photoluminescent Egress Path Markings: Photoluminescent products containing no radioactive materials and requiring no electrical power.

1. Basis-of-Design:

a. Balco, a CSW Industrials Company; **Demarcation 4211C Series**

2. Manufacturers: Subject to compliance with requirements, available manufacturers offering products that may be incorporated into the Work include, but are not limited to, the following:

a. American PERMALIGHT, Inc.
b. Ecoglo USA
c. Everglow NA, Inc.
d. Jessup Manufacturing Company
e. Substitutions: Under provisions of Section 012500 “Substitution Procedures”.

B. Wall-Mounted Perimeter Markings:

1. 1-inch-wide stripes mounted to aluminum retainer.

C. Extruded Aluminum: ASTM B 221, Alloy 6063.

D. Adhesive: As recommended by manufacturer.

PART 3 - EXECUTION

3.1 PREPARATION

A. Comply with manufacturer's written instructions for surface preparation.

B. Clean and prepare surfaces to achieve a smooth, dry, clean surface free of flaking, unsound coatings, cracks, defects, projections, depressions, and substances that could impair bond between photoluminescent egress path markings and wall or floor surfaces.

3.2 INSTALLATION

A. General: Install photoluminescent egress path markings according to manufacturer's written instructions.

END OF SECTION 104513

SECTION 113300 - RETRACTABLE STAIRS

PART 1 - GENERAL

1.1 SECTION INCLUDES

A. Manual disappearing stairways.

1.2 ACTION SUBMITTALS

A. Manufacturer's data sheets on each product to be used, including:

1. Preparation instructions and recommendations.
2. Storage and handling requirements and recommendations.
3. Installation methods.

B. Shop Drawings:

1. Plan and section of stair installation.
2. Indicate rough opening dimensions for openings.

1.3 DELIVERY, STORAGE, AND HANDLING

A. Store stairway until installation inside under cover in manufacturer's unopened packaging. If stored outside, under a tarp or suitable cover.

1.4 WARRANTY

A. Limited Warranty: One (1) year against defective material and workmanship, covering parts only. Defective parts, as deemed by the manufacturer, will be replaced at no charge, freight excluded, upon inspection at manufacturer's plant.

PART 2 - PRODUCTS

2.1 MANUFACTURERS

A. Basis-of-Design:

1. Precision Ladders, LLC; **Super Simplex**

B. Manufacturers: Subject to compliance with requirements, available manufacturers offering products that may be incorporated into the Work include, but are not limited to, the following:

1. Marwin Company, Inc. (The)
2. Werner Co.
3. Substitutions: Under provisions of Section 012500 “Substitution Procedures”.

2.2 MANUAL DISAPPEARING STAIRWAY

A. Performance Standard:

1. Unit shall comply with ANSI A14.9, Commercial Type, for rough openings between 27 inches to 39 inches and Residential Type, for rough openings between 22 inches to 27 inches.
2. Stairway capacity shall be rated at 500 lbs.

B. Accessories:

1. Steel pole to aid opening and closing stairways.
2. Fold assist to aid in folding and unfolding of sections.

C. Components:

1. Stairway Stringer: 6005-T5 extruded aluminum channel 5 inches by 1-inch by 1/8-inch; tri-fold design; steel blade type hinges; adjustable feet with plastic mar-guard. Pitch shall be 63°.
2. Stairway Tread: 6005-T5 extruded aluminum channel 5-3/16 inches by 1¼ inches by 1/8-inch. Depth is 5-3/16 inches. Deeply serrated top surface. Riser Height: 9½ inches. Clear Tread Width for Standard Width: 19½ inches.
3. Railing: Aluminum bar handrail riveted to stringers, upper section only.
4. Frame: 1/8-inch steel formed channel, box; 6 inches deep.
5. Door Panel: Standard door shall be constructed of 1/8-inch aluminum sheet attached to stairway frame with a steel piano hinge. Door overlaps bottom flange of frame. Eye bolt accommodates pole for opening and closing door.
6. Hardware:

    a. Steel blade type hinge connecting stringer sections. Zinc plated and chromate sealed.
    b. Steel operating arms, both sides. Zinc plated and chromate sealed.
    c. Double acting steel springs and cable, both sides.
    d. Rivets rated at 1100 lb shear strength each.
    e. Steel section alignment clips at stringer section joints.
    f. Molded rubber guards at corners of aluminum door panel.

7. Finishes: Mill finish on aluminum stairway components. Prime coat on frame.

2.3 FABRICATION

A. Completely fabricate ladder ready for installation before shipment to the site.

PART 3 - EXECUTION

3.1 EXAMINATION

A. Do not begin installation until rough opening and structural support have been properly prepared.

B. If substrate preparation is the responsibility of another installer, notify Architect of unsatisfactory preparation before proceeding.

C. Examine materials upon arrival at site. Notify the carrier and manufacturer of any damage.

3.2 INSTALLATION

A. Install in accordance with manufacturer's instructions.

3.3 PROTECTION

A. Protect installed products until completion of project.

B. Touch-up, repair or replace damaged products before Substantial Completion.

END OF SECTION 113300

SECTION 114000 – FOODSERVICE SPECIFICATIONS

PART 1 - GENERAL

1.01 SECTION INCLUDES: Foodservice Equipment

1.02 RELATED SECTIONS:

A. Refer to General Conditions, Supplementary Conditions, and applicable provisions of Division 1 for additional instructions as may be applicable.

B. Refer to Division's 5, 6, and 9 - Interior Design; for applicable provisions and sections regarding interior design finish, applications, details, and special instructions relating to items specified in this Section. Kitchen Equipment Contractor (KEC) (KEC) shall be responsible for obtaining these Sections and any associated drawings, and coordinating the pertinent information contained in them, with the applicable manufacturers and fabricators.

C. Refer to Division 15 - Mechanical; for applicable provisions and sections regarding mechanical services, including, but not limited to, rough-ins, grease traps, steam traps, drain traps, atmospheric vents, valves, pipes and pipe fittings, ductwork, and other materials necessary to complete final connections to individual items as specified in this Section; not work of this Section.

D. Refer to Division 16 - Electrical; for applicable provisions and sections regarding electrical services, including, but not limited to, rough-ins, wiring, disconnects and other materials necessary to complete final connections to individual items as specified in this Section; not work of this Section.

E. Work included in other Sections - Provision of all wall, floor, and/or ceiling/roof openings, recesses, sleeves, and/or conduits; and equipment pads, as required for installation of items included in this section. Also sealing of these openings, recesses, sleeves, etc., after installation of the equipment items, as required. Not work of this Section.

F. Work included in other Sections - Disconnection of existing equipment to be relocated and/or reused; and disconnection and removal of existing equipment which will not be reused, shall be as determined and designated by RJS+ASSOCIATES, LLC,. in other Sections; not work of this Section. (Applicable to Projects with existing equipment.)

1.03 DEFINITIONS:

A. Furnish - Supply and deliver to Project Site, ready for unloading, unpacking, assembly, installation, and similar operations.

B. Install (set in place) - Work at Project Site including actual unloading, unpacking, assembly, erecting, rigging, placing, anchoring, applying, finishing, curing, protecting, cleaning, and similar operations; ready for final utility connections by other Sections as appropriate.

C. Coordinate – Relay requested information, by other trades, which is required to ensure the other trades correctly perform their work related to the food service or laundry equipment installation

D. Provide - Furnish and install complete, ready for intended use.

E. Kitchen Equipment Contractor (KEC) - All references to the Kitchen Equipment Contractor (KEC) (KEC) in this Section 114001 shall refer to the Kitchen Equipment Kitchen Equipment Contractor (KEC) (KEC). Reference to any other Kitchen Equipment Contractor (KEC), shall be specific; such as General, Plumbing (Sub-)

Kitchen Equipment Contractor (KEC), Electrical (Sub-) Kitchen Equipment Contractor (KEC), Architect designated, etc.

1.04 SPECIFIER IDENTIFICATION SYSTEM: Not Applicable.

1.05 LAWS, ORDINANCES AND STANDARDS:

A. STANDARDS: Except as otherwise indicated, comply with the following standards as applicable to the manufacture, fabrication, and installation of the work of this Section:

1. Air Conditioning and Refrigeration Institute (A.R.I): Comply with the applicable regulations and references of the latest edition of standards for remote refrigeration system(s), components and installation.

2. American Gas Association (A.G.A.): Comply with A.G.A. standards for gas heated equipment, and provide equipment with the A.G.A. seal. Automatic safety pilots to be provided on all equipment, where available. (Canadian Gas Association or alternate testing lab's seals may be accepted if acceptable to local code jurisdictions.)

3. American National Standards Institute (A.N.S.I.): Comply with A.N.S.I. Z21-Series standards for gas-burning equipment, and provide labels indicating name of testing agency.

4. American National Standards Institute (A.N.S.I.): Comply with A.N.S.I. B57.1 for compressed gas cylinder connections, and with applicable standards of the Compressed Gas Association for compressed gas piping.

5. American National Standards Institute (A.N.S.I.): Comply with A.N.S.I. A40.4 and A40.6 for water connection air gaps and vacuum breakers.

6. American Society of Heating, Refrigeration and Air Conditioning Engineers (A.S.H.R.A.E.): Comply with the applicable regulations and references of the latest edition of standards for remote refrigeration system(s), components and installation.

7. American Society of Mechanical Engineers (A.S.M.E.): Comply with A.S.M.E. Boiler Code requirements for steam generating and steam heated equipment; provide A.S.M.E. inspection, stamp and registration with National Board.

8. American Society for Testing and Materials (A.S.T.M.): Comply with A.S.T.M. C1036 for flat glass.

9. American Society for Testing and Materials (A.S.T.M.): Comply with A.S.T.M. C1048 for heat-treated flat glass – Kind HS, Kind FT coated and uncoated glass.

10. American Welding Society (A.W.S.): Comply with A.W.S. D1.1 structural welding code.

11. National Electric Code (N.E.C.): Comply with N.F.P.A. Volume 5 for electrical wiring and devices included with foodservice equipment, A.N.S.I. C2 and C73, and applicable N.E.M.A. and N.E.C.A. standards.

12. National Electrical Manufacturers Association (N.E.M.A.): Comply with N.E.M.A. LD3 for high-pressure decorative laminates.

13. National Fire Protection Association (N.F.P.A.): Comply with the applicable sections of the N.F.P.A. for exhaust hood, ventilators, duct and fan materials; hoods fire suppression systems, construction and installation; as well as, local codes and standards.

14. National Sanitation Foundation (N.S.F.): Comply with the latest Standards and Revisions established by N.S.F. for equipment and installation. Provide N.S.F. Seal of Approval on each applicable manufactured item, and on items of custom fabricated work. (UL Sanitation approval and seal may be accepted if acceptable to local code jurisdictions.)

15. Sheet Metal and Air Conditioning Kitchen Equipment Contractor (KEC)'s National Association (S.M.A.C.N.A.): Comply with the latest edition of S.M.A.C.N.A. guidelines for seismic restraint of kitchen equipment, and the applicable local regulatory agencies requirements.

16. Underwriters Laboratories (U.L.): For electrical components and assemblies provide either U.L. labeled products or, where no labeling service is available, "recognized markings" to indicate listing in the UL "Recognized Component Index". (Canadian Standards Association or alternate testing lab's seals may be accepted if acceptable to local code jurisdictions.)

17. UL 300 Standard: Wet chemical fire suppression systems for exhaust hoods/ventilators shall comply with these requirements.

18. American with Disabilities Act (ADA): Comply with requirements, as applicable to this Project.

19. Refrigeration Service Engineers Society (R.S.E.S.): Comply with the applicable regulations and references of the latest edition of standards for remote refrigeration system(s), components and installation; and the 1995 requirements of the Montreal Protocol Agreement.

20. All refrigerants used for any purpose shall comply with the 1995 requirements of the Montreal Protocol Agreement, and subsequent revisions and amendments. No CFC refrigerants shall be allowed on this Project.

21. All refrigeration components installation, repairs, and/or associated work on any refrigeration system, self-contained or remote, shall be performed by a Certified Refrigeration Mechanic.

22. Comply with all applicable local codes, standards and regulations, and any special local conditions (example only: City of Los Angeles Testing Lab requirements or seismic standards compliance).

23. Jails, prisons, and all detention facilities shall comply with Correctional Standards as applicable to the specific Project. Verify the level of security and construction required with the Project Architect, and provide all items in compliance. As a minimum, no part or component of any item provided shall be easily removable and used as a weapon.

24. Subway grating installed in floor drain troughs must meet UBC 1104.3.1 standards for maximum opening sizes in grates.

25. Confirm all drawings, specifications, and project documentation meet all federal, state, and local codes and regulations.

1.06 KITCHEN EQUIPMENT CONTRACTOR (KEC) QUALIFICATIONS:

In addition to requirements of Related Sections 1.02. A, submit evidence of compliance with the following qualifications and conditions.

1. Five (5) years minimum continuous operation under the same company name and ownership.

2. Evidence of Company financial stability, and financial ability to complete this Project without endangering that stability.

3. List a minimum of comparable size and scope projects completed in the last five (5) years, with Owner's contact name and telephone number.

4. Have manufacturer's authorization to purchase, distribute, and install all items specified with this Project.

5. Maintain a staff or have access to personnel with a minimum of five (5) years experience in the installation of comparable size and scope projects, and meeting NSF standards and requirements. (UL Sanitation standards and requirements may be accepted if acceptable to local code jurisdictions.)

6. Maintain or have access to a fabrication shop meeting NSF standards and labeling requirements. (UL Sanitation approval and seal may be accepted if acceptable to local code jurisdictions.) If other than the Kitchen Equipment Contractor (KEC)'s own fabrication shop, they shall have five (5) years minimum experience in the fabrication of comparable size, scope, and level of quality projects; and the Kitchen Equipment Contractor (KEC) shall submit their company name and credentials to the Architect, which shall have the right of approval or disapproval

7. Maintain a staff or have access to personnel experienced in the preparation of professional style shop drawings and submittals.

8. Maintain or have access to manufacturer's authorized service personnel together with readily available stock of repair and replacement parts.

9. Any sub-Kitchen Equipment Contractor (KEC) employed by Kitchen Equipment Contractor (KEC), for this Project, shall comply with the same qualification requirements.

1.07 SUBSTITUTIONS:

A. Submit itemized bids for the specific manufacturer and model specified. Any substitutions submitted shall be itemized at the end of the bid proposal as an "add" or "deduct' 'amount.

B. Requests for substitutions must be submitted in writing a minimum of two weeks prior to Bid due date to allow time for written approvals by RJS+ASSOCIATES, LLC,. All substitutions and request for substitutions shall comply with conditions and requirements as stated in article 1.08.

C. If custom fabricated items are submitted and accepted as a substitute to standard manufactured items, these items shall be manufactured to NSF standards and meet the specifications of the specified manufactured items, and in general, the fabrication sections which follows.

1.08 APPROVED SUBSTITUTIONS AND/OR LISTED ALTERNATES:

Substitutions approved as noted in article 1.07, and/or any Listed Alternate Manufacturers listed in these Itemized Specifications, or added by Addendum, may be utilized, in lieu of the primary specified manufacturer with the following conditions and understanding.

1. The Project Documents are designed and engineered using the primary specified manufacturer and model. The Kitchen Equipment Contractor (KEC) shall assume total responsibility for any deviations required, due to the utilization of a substitution/alternate manufacturer or model; including, but not limited to, fitting alternates into the available space, providing directions for required changes, and assuming any and all associated costs for utility, building, food service design, architectural, or engineering changes directly or indirectly related to the substitution.

2. The Kitchen Equipment Contractor (KEC) shall be responsible for supplying the model, which is equal to the primary specified model in regards to general function, features, options, sizes, accessories, utility requirements, finish, operation, and listing approvals. If it is determined by the Owner or their appointed representative at any time during the construction and installation, and prior to the final acceptance of the Project, that the substitution/alternate model submitted is not equal to the primary specified model, the Kitchen Equipment Contractor (KEC) shall assume all associated cost and implications required to replace the model submitted, with the correct model.

3. The bid proposal shall clearly state any substitutions/alternates, which will be utilized including the manufacturer and model number. The proposal shall also include a data sheet for each substitution/alternate, with any and

all deviations between the primary specified manufacturer and the substitution/alternate manufacturer, itemized and listed on the data sheet. Submittal of the manufacturers' cut sheets only shall not be acceptable as the data sheet. Complex alternates such as utility distribution systems, exhaust hoods, ventilators, etc. shall include a shop drawing specific to the Project.

4. Inclusion of an alternate manufacturer in the Itemized Specifications is not intended to indicate that there is an equal alternate unit to match every primary specified unit. It shall be the responsibility of the Kitchen Equipment Contractor (KEC) to insure that the alternate unit submitted matches the primary specified unit; and meets the other conditions, as stated above.

5. Manufacturers not approved as substitutions, or listed as a Listed Alternate will not be permitted, unless submitted for prior approval, as described above and in the General and Supplementary Conditions, and applicable Division-1 Specifications Sections.

6. Submittal of a substitution/alternate manufacturer or model shall indicate agreement to the above stated conditions. Solely at the Owner's discretion, failure to comply with any of these conditions, or to supply complete and correct data information, shall result in the Kitchen Equipment Contractor (KEC) being required to provide the primary specified manufacturer, at no additional cost to the Owner; or to adjust the Contract cost.

1.09 DISCREPANCIES:

Where discrepancies are discovered between the drawings and the specifications, regarding quality or quantity, the higher quality or the greater quantity shall be included in the Bid Proposal. Notify RJS+ASSOCIATES, LLC, in writing, of any discrepancies discovered; and await clarification prior to proceeding with the items or areas in question.

1.10 SUBMITTALS:

A. The Kitchen Equipment Contractor (KEC) shall review all submittals for basic compliance with the Contract Documents, and correct as required; prior to submitting to the Design Team (Architects/Engineers/ Consultants/Owner) for review. Failure to comply with this requirement, and submission of submittal(s) which are significantly inconsistent with the Contract Documents, and which inconsistencies are discovered during review by a Design Team member, shall be justification for reimbursement by the Kitchen Equipment Contractor (KEC) to the Design Team member's company, for the "lost" time; or for the time required for a second review.

B. Kitchen Equipment Contractor (KEC)'s use of any Design Team's AutoCAD contract drawing(s) for basis of producing their submittals, shall be with the following conditions and understanding:

1. Kitchen Equipment Contractor (KEC) assumes total liability and responsibility for accuracy, and for conformance and verification with Architectural, Food Service and Engineering drawings, actual field conditions, and all equipment provided.

2. Kitchen Equipment Contractor (KEC) further assumes responsibility for coordination of their submittals with those of other Contractors and Sub- Contractors, as required.

3. Submittal(s) shall have Kitchen Equipment Contractor (KEC)'s title block and information

4. AutoCAD drawing(s) obtained from the Design Team, or from an alternative source, may require payment of a fee for their use, signing of an Agreement or Release Form, or written permission. Contact Team member responsible for producing desired contract drawing(s).

5. Failure to comply with any of these conditions could result in rejection of the submittal(s), and possible le gal action.

C. Rough-In Drawings:

1. Submit one (1) set in reproducible transparency form for approval. After approval, reproduce and supply the required number of distribution prints for record and construction purposes.

2. Submit 1/4 inch (1:50) scale rough-in drawings for approval. These drawings shall be dimensioned from grid lines; showing location of ducts, stubs, floor and wall sleeves, for ventilation, plumbing, steam, electrical, refrigeration lines, beverage lines, concrete base and curb dimensions as required for equipment so supported.

3. Site-verify mechanical, electrical and ventilating rough-in and sleeve locations.

4. The Kitchen Equipment Contractor (KEC) shall be responsible for the accuracy of the information on their submittals.

5. In the event rough-ins have been accomplished before award of this contract, the Kitchen Equipment Contractor (KEC) shall check the existing facility and make adjustments to their equipment to suit building conditions and utilities, where possible. If not possible, so state in a letter with reasons, and an alternate method and pricing, to the Owner and RJS+ASSOCIATES, LLC,

D. Shop Drawings:

1. Submit one (1) set in reproducible transparency form for approval. After approval, reproduce and supply the required number of distribution prints for record and construction purposes.

2. Submit shop drawings for items of custom fabrication included in this contract. Shop drawings shall be submitted at 3/4 inch (1:20) and/or 1-1/2 inch (1:10) scale and shall show dimensions, materials, details of construction, features and options, installation and relation of adjoining work requiring cutting or close fitting. Shop drawings shall also indicate reinforcements, anchorage and related work required for the complete installation of fixtures.

3. Before proceeding with the fabrication of any item, the Kitchen Equipment Contractor (KEC) shall be responsible for verifying and coordinating all dimensions and details, with site dimensions and conditions.

E. Product Data Submittal Manuals:

1. Submit six (6) bound sets of Product Data Submittal Manuals with a cover sheet and detailed information on every item included in this Section. Detailed information shall include, but not be limited to, item number, description, quantity, model numbers, options and accessories provided, exact utility requirements, manufacturer's cut-sheets, reference to specific shop drawings, and etc. Distribute one additional copy of installation and start-up instructions to the Installer. Mark each data sheet with the applicable project equipment item number. Each data sheet to include N.E.M.A. plug and receptacle configuration for applicable items, where applicable. Every cover sheet and associated detailed submittal shall provide sufficient and complete information to verify that the Kitchen Equipment Contractor (KEC) is providing each item in compliance with the Contract documents.

2. RJS+ASSOCIATES, LLC, review of drawings, shop details, product data brochures, and service and parts manuals is for general conformance with the design concept and contract documents. Markings or comments shall not be construed as relieving the Kitchen Equipment Contractor (KEC) from compliance with the contract documents, or departures there from. The Kitchen Equipment Contractor (KEC) remains responsible for details and accuracy, for confirming and correlating all quantities and dimensions, for selecting fabrication processes, for techniques of assembly, and for performing their work in a safe, satisfactory, and professional manner.

1.11 OPERATION AND MAINTENANCE DATA MANUALS:

A. Operation And Maintenance Manuals (Service And Parts Manuals): Three (3) bound sets of manuals shall be furnished for items of standard manufacture on/or before the date of the first event to occur of the following:

demo/start-up, start-up for intended use by the Owner/Operator, completion of installation of kitchen equipment contract package, or final acceptance of installation by Owner. Manuals to be in alphabetical order according to manufacturer include item numbers and include utility option provided of the equipment installed.

B. Service Agency List: Submit, with the service and parts manuals, a complete list of local service agencies for included manufacturers, complete with telephone numbers for all buy-out equipment installed.

C. Provide video tapes for maintenance, training, operation, etc where available from the manufacturer.

1.12 AS-BUILT/ RECORD DOCUMENTS:

A. Maintain one record set of Foodservice Equipment Plans with any related corrections, revisions, additions, deletions, changes, etc. noted during construction and installation. Provide an "as-built" set in reproducible transparency form and electronic computer disk form.

B. Provide one (1) final set of Product Data Submittal Manual with any related corrections, revisions, additions, deletions, changes, etc. noted during construction and installation as a specifications record set.

C. These documents shall be provided on/or before the date of the first event to occur of the following: demo/start-up, start-up for intended use by the Owner/Operator, completion of installation of kitchen equipment contract package, or final acceptance of installation by Owner.

D. Provide one (1) final complete set of Submittals to be retained by RJS+ASSOCIATES, LLC, as a Record Set.

1.13 SCHEDULE:

A. General: Time is of the essence in this agreement and acceptance constitutes a guarantee that the Kitchen Equipment Contractor (KEC) can and will obtain materials, equipment and manpower, upon notice to proceed, to permit overall completion of the entire building project on schedule. The Kitchen Equipment Contractor (KEC) shall coordinate their work with the progress schedule, as prepared and updated periodically by the General Kitchen Equipment Contractor (KEC) or Construction Manager.

B. Anticipated delays, not within the realm of control of the Kitchen Equipment Contractor (KEC), shall be noted in a written notification to the Foodservice Consultant and the Architect, immediately upon the Kitchen Equipment Contractor (KEC)'s realization that delays are imminent.

C. Failure of manufacturers to, meet promised delivery dates will not grant relief to the Kitchen Equipment Contractor (KEC) for failure to meet schedules; unless the Kitchen Equipment Contractor (KEC) can establish, in writing, that orders were received by the manufacturer, with reasonable lead times.

D. Extra charges resulting from special handling or air shipment in order to meet the schedule will be paid by the Kitchen Equipment Contractor (KEC) if insufficient time was allowed in placing factory orders.

1.14 PRODUCT HANDLING:

A. Delivery Of Materials: Deliver materials (except bulk materials) in manufacturer's containers fully identified with manufacturer's name, trade name, type, class, grade, size, color, power requirement, if any and item number.

B. Storage of Materials, Equipment and Fixtures: Kitchen Equipment Contractor (KEC) is responsible for receiving and warehousing of equipment and fixtures, until ready for installation. Store materials, equipment and fixtures in sealed containers. Store off the ground and under cover, protected from damage.

C. Handling Materials and Equipment: Verify and coordinate conditions at the building site, particularly door and/or wall openings, and passages, to assure access for all equipment. Pieces too bulky for existing facilities

shall be hoisted or otherwise handled with apparatus as required. All special handling equipment charges shall be arranged for and paid for by the Kitchen Equipment Contractor (KEC).

1.15 PRODUCT PROTECTION:

A. The Kitchen Equipment Contractor (KEC) is responsible, during the progress of the project, to protect their equipment against theft or damage, until final acceptance by the Owner. Items delivered to the job site at the Owner's or Contract Manager's request before the site is ready for installation; should be signed for, as delivered by the Owner or Contract Manager.

B. Use all means reasonable to protect the materials of this Section before, during, and after installation; and to protect the associated work and materials of the other trades.

C. Pre-fabricated walk-in boxes, on-site and installed in advance of the rest of the equipment, are not to be available for or used as general storage by other trades; and should be locked before leaving the site. Damage and theft resulting from the failure to secure boxes shall be repaired or replaced at Kitchen Equipment Contractor (KEC)'s own expense. Kitchen Equipment Contractor (KEC) to be available as required to open and secure walk-in boxes as needed for the other trades to perform their work related to these walk-in boxes, with-in the other trades schedules, as not to delay the other trades work.

D. Kitchen Equipment Contractor (KEC) to verify if the flooring is to be acid washed. In the event of this type of cleansing, do not deliver any equipment constructed of stainless steel until a minimum of 24 hours after the final cleansing is completed.

1.16 WARRANTY:

A. Unless otherwise noted in Related Sections 1.02.A, items furnished shall be fully guaranteed against defects in workmanship and material(s) for one full year from the date of the first event to occur of the following: date of issue of Certificate Of Occupancy (or the equivalent), start-up for intended use by the Owner/Operator, completion of installation of kitchen equipment contract package, or final acceptance of installation by Owner. Should a Temporary Certificate of Occupancy be issued for partial completion of work, the items furnished within that designated area shall be under warranty from the date of issue of that Certificate. The Kitchen Equipment Contractor (KEC) or their service agent will make repairs and replacements without charge to the Owner, and within a reasonable time.

B. Additional Warranty: Refrigeration systems shall include start-up and one-year service and maintenance contract, in addition to the regular one-year warranty as stated above; plus additional four-year warranty on sealed portions of condensing units, including refrigerant lost. This shall include all refrigerators, ice cream makers and cabinets, ice makers, freezers, dispensers, walk-in coolers/freezers compressors, and/or any other items with refrigeration system(s).

PART 2 – PRODUCTS

2.01 EQUIPMENT:

Equipment schedule: Refer to schedule on Foodservice Drawings and Part 5 Itemized Specifications for equipment included in this Section.

2.02 MATERIALS:

A. Metals:

1. Stainless Steel: AISI Type 302/304, hardest workable temper, and No.4 directional polish. Standard gauges are noted in these specifications under Heading 2.04; Section B.1.

2. Galvanized Steel Sheet: ASTM A526, except ASTM A527 for extensive forming; ASTM A525, G90 zinc coating, chemical treatment.

   Note: Where painted finish is indicated, provide mill phosphates treatment in lieu of chemical treatment.

3. Steel Sheet: ASTM A569 hot-rolled carbon steel.

4. Galvanized Steel Pipe: ASTM A53 or ASTM A120, welded or seamless, schedule 40, galvanized.

5. Steel Structural Members: Hot rolled or cold formed, carbon steel unless stainless steel is indicated.

   Note: Galvanized Finish (G.I.): ASTM A123 hot-dipped zinc coating, applied after fabrication.

6. Aluminum: ASTM B209B221 sheet, plate and extrusions (as indicated); alloy, temper and finish as determined by manufacture / fabricator, except 0.40-mil natural anodized finish on exposed work unless another finish is indicated.

B. Plastic Laminate: NEMA LD3, Type 2, 0.050" thick, except Type 3, 0.042" for post-forming smooth (non-textured). Color and texture as selected by the Architect/ Interior Designer.

1. Comply with N.S.F. Standard No. 35.

2. Veneered with approved waterproof and heat proof cement. Rubber base adhesives are not acceptable.

3. Applied directly over close grained plywood, such as solid Mahogany or solid Birch, of selected, smooth, sanded stock to ensure a smooth ripple-free laminated surface; or commercial grade furniture particle board, Cortron or equal.

4. If specified plywood or particle board is unavailable, submit specifications and sample of alternate material for approval. If specified for a “wet” area, only marine grade wood products will be approved for these areas.

5. Exposed faces and edges shall be faced with 1/16 inch (1.6mm) thick material. Corresponding backs are to be covered with approved backing and balancing sheet material. No unfinished exposed plywood/particle board will be acceptable

C. Hardwood Work Surfaces: Laminated edge grained hard maple (Acer saccharum), NHLA First Grade with knots, holes and other blemishes culled out, kiln dried at 8 percent or less moisture, waterproof glue, machined, sanded, and finished with N.S.F. approved oil-sealer.

D. Solid Surface Material (SSM): Unless otherwise specified, provide 1/2" thick 100% homogeneous filled acrylic material meeting ANSI Z124.6 Type 6, as manufactured by DuPont Company and known as Corian. Color(s) and pattern(s) as selected by the Architect/ Interior Designer.

1. Comply with N.S.F. Standard No. 51.

2. Acrylic adhesive shall be used for all joints.

3. Install directly over 3/4" thick (minimum) substrate of close grained plywood, such as solid Mahogany or solid Birch, of selected, smooth, sanded stock to ensure a smooth rip-

ple-free surface; or commercial grade furniture particle board, Cortron or equal. Additional bracing and support shall be provided as required by the SSM manufacturer.

4. Fabrication shall be by a fabricator trained by DuPont factory authorized training personnel and Certified as a Commercial Conan Fabricator.

5. Installation shall be by an installer trained by DuPont factory authorized training personnel and Certified as a Commercial Corian Installer.

6. All fabrication and installation of Corian, and all components attached to or installed in or through Corian shall be in compliance with manufacturer's instructions and the DuPont Corian Food Service Guidelines and Design Manual. Of particular concern shall be the sections, details, and instructions on the installation of drop-in or built-in hot or cold components.

7. All other Solid Surface Material (SSM), which may be specified by others to be used in food service areas, must comply with NSF certification and ANSI Standard No. 51.

E. Insulation:

1. For low temperature applications, such as ice bins, cold pans, or fabricated under counter freezers, use urethane, rigid board foam or foamed-in-place; not less than 2 inches (50mm) thick, except that vertical surfaces of cold pans and ice bins may be 1 inch (25mm) thick. Insulation shall be bonded at joints, to prevent condensation on exterior.

2. For refrigerated applications such as fabricated under counter refrigerators, use urethane rigid board foam or foamed-in-place, or Styrofoam rigid board foam 2 inches (50mm) thick, bonded at joints.

3. For heated type applications, such as plate warmers, use block type rock wool, minimum 1 inch (25mm) thick:

4. At counter tops, subject to heat from cooking equipment and refrigeration compressors, use 1 inch (25mm) thick B&Z Products (1-800-999-0890) Marinite I, or equal, to insulate underside of top.

5. Marinite material shall be added between freezer or refrigerator, and 14 gauge (2.0) stainless steel top.

6. All insulation shall be fully encased or enclosed.

F. Joint Materials:

1. Sealants: 1-part or 2-part, polyurethane or silicone based, liquid elastomeric sealant, non-solvent release type, Shore A hardness of 30, except 45 if subject to traffic. Sealants shall be N.S.F. Listed for use in food zones. Installation shall comply with applicable requirements of N.S.F. Standards.

2. Backer Rod: For 3/8 inch or larger joints, shall be polyurethane rod stock, larger than joint width.

3. Gaskets: Solid or hollow (but not cellular) neoprene or polyvinyl chloride; light grey, minimum of 40 Shore A hardness, self-adhesive or prepared for either adhesive application or mechanical anchorage.

G. Paint and Coatings:

1. Provide the types of painting and coating materials which, after drying or curing, are suitable for use in conjunction with foodservice, and which are durable, non-toxic, non-dusting, non-flaking, mildew resistant, and comply with governing regulations for foodservice.

2. Galvanize Repair Paint: MIL-P-21035.

3. Sound Deadener: NSF listed sound deaden material such as latex sound deadener, for internal surfaces of metal work, and underside of metal counters and tables between work top and underbracing.

4. Pretreatment: SSPC-PT2 or PT3, of FS TT-C490.

5. Primer Coating for Metal: FS TT-P-86, type suitable for baking, where indicated.

6. Enamel for Metal: Synthetic type, FA TT-P-491, type suitable for baking, where indicated.

2.03 FABRICATED PRODUCTS:

A. Hardware:

1. General: Manufacturer's standard, but not less than ANSI 156.9 Type 2 (Institutional), satin finish stainless steel or dull chrome finish on brass, bronze, or steel.

2. Hinged Door Hardware: Hinged doors shall be mounted with heavy duty N.S.F. approved hinges with Component Hardware Group, Model No. P62-1010 pulls, or equal. Catches shall be heavy-duty magnetic type, except as otherwise indicated.

3. Drawer Hardware: Slides to be 200 pounds minimum capacity per pair, 300 series stainless steel, full extension, side-mounting, self-closing type, with stainless steel ball bearings and positive stops; Component Hardware Group Series S52, or equal. Pulls shall be Component Hardware Group, Model No. P62-1012 or equal.

4. Sliding Door Hardware: Sliding doors shall be mounted on large, quiet ball bearing rollers in 14-gauge (2.0mm) stainless steel overhead tracks, and be removable without the use of tools. Bottom of cabinet shall have stainless steel guide-pins and not channel tracks for doors.

5. All hardware shall be identified with manufacturer's name and number, so that broken or worn parts may be replaced.

B. Casters:

1. Type and size as recommended by caster manufacturer, N.S.F. approved for the type and weight of equipment supported; but not less than 5 inch (127mm) diameter heavy-duty, ball bearing, solid or disc wheel with non-marking grease proof rubber, neoprene or polyurethane tire; unless otherwise specified. Minimum width of tread shall be 1-3/16 inch (30mm). Minimum capacity per caster shall be 250 pound (113.4kg), unless otherwise noted in itemized specifications.

2. Solid material wheels to be provided with stainless steel rotating wheel guard.

3. To be sanitary, have sealed wheel and swivel bearings and polished plated finish per N.S.F.

4. Unless otherwise indicated, equip each item with two (2) swivel-type casters and two (2) fixed casters. Provide foot brakes on two (2) casters on opposite front corners of equipment.

5. Unless equipment item is equipped with another form of all-around protective bumper, provide circular rotating bumper above each caster, 5 inch (127mm) diameter tire of light grey synthetic rubber (hollow or closed-cell) on cadmium-plated disc.

C. Plumbing Fittings, Trim and Accessories:

1. General: Where exposed or semi-exposed, provide bright chrome plated brass or polished stainless steel units. Provide copper or brass where not exposed.

2. Vacuum Breakers: Provide with foodservice equipment as listed in the itemized specifications.

3. Water Outlets: At sinks and at other locations where water is supplied (by manual, automatic or remote control), furnish commercial quality faucets, valves, dispensers or fill devices, of the type and size indicated, and as required to operate as indicated.

4. Waste Fittings: Except as otherwise indicated, furnish 2 inch (50mm) remote-lever waste valve, and 3-1/2 inch (89mm) strainer basket.

D. Electrical Materials:

1. General: Provide standard materials, devices and components as recommended by the manufacturer or fabricator, selected and installed in accordance with N.E.M.A. standards and recommendations; and as required for safe and efficient use and operation of the foodservice equipment, without objectionable noise, vibration and sanitation problems.

2. Before ordering equipment, confirm with the serving electrical utility, pertinent electrical requirements, such as actual voltages available, number of phases and number of wires in the system.

3. Electrical work for fabricated equipment shall be completely wired to a junction or pull box, wholly accessible, mounted on the equipment. Wiring shall be labeled for outlet or item served. Verify local requirements for U.L. Listing on complete assembly, and provide if required.

4. Components shall bear the U.L. label or be approved by the prevailing authority.

5. Custom fabricated refrigerator units shall be provided with vapor tight light receptacles, shatterproof lamps and automatic switches. Wiring shall be concealed.

6. Controls and Signals: Provide recognized commercial grade signals, on-off push buttons or switches, and other speed and temperature controls as required for operation; complete with pilot lights and permanent signs and graphics to assist the user of each item. Provide stainless steel cover plates at control and signal electrical boxes. Controls and switches are to be located out of heat zones, easily accessible, and in locations that preclude accidental contact by employees.

7. Internal Wiring of Fixtures and Equipment:

a. The Kitchen Equipment Contractor (KEC) shall be responsible for internal wiring of electrical devices, built into or forming an integral part of fabricated equipment items. Wiring to be in metal conduit, to an accessible pull-box or j-box, and tagged for intended use. Refer to Section 16 Specifications for color coding of wiring.

b. Each standard item shipped in sections, shall be properly connected internally and verified by the Kitchen Equipment Contractor (KEC).

c. Furnish dish washers and conveyors internally wired to junction box or distribution panel as specified; including push button switches, motors, immersion heaters, solenoids, etc.

d. Where light fixtures are specified or detailed as part of counters, cases or fixtures; light fixtures, lamps and shields shall be furnished and installed. Warm white lamps shall be provided, unless otherwise specified. If fluorescent light fixtures are specified, ballasts shall be provided and shields shall be included. Shields shall be provided for all light fixtures.

e. Wiring for built-in strip heaters or immersion-type elements shall be provided as follows:

   1. In heat zone: shall have U.L. approved insulation and be not less than 300-volt rated heat resistant insulation with nickel wire.

   2. Connection wiring extended in raceway or conduit to junction or pull box, shall be not less than 600 volt rated heat resistant insulation covered wire, U.L. approved, or equal

f. Wiring for fabricated refrigerator and freezer cabinets shall be U.L. approved, insulated, cable; from exterior junction box to internal components, within insulation, unless code requires metallic conduit:

   1. Conduit shall be Electrical Metallic Tubing, rigid or flexible (Greenfield). For freezer applications, Seal-Tite Flex or approved equal shall be used.

   2. Internal wiring shall be U.L. approved rubber covered 600 volt rated conductor, except door heaters, which shall be Nichrome wire with silicone braided jacket, having resistance of 10.4 watts per lineal foot.

   3. Convenience outlets, lighting receptacles, (rubber or porcelain) and door switches, shall be mounted in approved boxes. Convenience outlets for evaporators shall be twist lock type. Solid connections, as for freezer evaporators, shall be made vapor tight.

g. Exposed flexible steel conduit on kitchen equipment shall be neoprene jacketed Seal -Tite conduit equal to Anaconda type "UA". U.L. approved, complete with approved liquid tight connectors on each end; designed to provide electrical grounding continuity.

h. Exposed electrical conduit used in kitchen wet area applications, except for flexible connections, shall be rigid galvanized steel. Thin wall conduit (EMT) shall not be permitted for wet areas. Exposed outlet boxes shall be liquid tight type, with threaded hubs.

8. Convenience and Power Outlets:

   a. Make cutouts and install appropriate boxes or outlets in fabricated fixtures, complete with wiring, conduit, outlet and stainless steel cover plate.

   b. Outlets and plugs shall conform to N.E.M.A. standards.

   c. Electrical outlets and devices shall be first quality "Specification Grade".

   d. GFCI outlets shall be furnished where adjacent to sink compartments, as per the National Electrical Code.

9. Plugs and Cords: Where cords and plugs are provided, they shall comply with National Electrical Manufacturer's Association (N.E.M.A.) requirements. Indicate N.E.M.A. configuration for each applicable item.

10. Heating Equipment:

   a. Electric and heating equipment shall be so installed as to be readily cleanable or removable for cleaning.

   b. Steam heated custom fabricated equipment shall be a self-contained assembly, complete with control valves located in an accessible position.

11. Motors: Totally enclosed type, except drip-proof type where not exposed to a dust or moisture condition; ball bearings, except sleeve bearings on small timing motors; windings impregnated to resist moisture; horse-power and duty-cycle ratings as required for the service indicated.

12. Power Characteristics: Refer to Section 16 Specifications for project power characteristics. Also, refer to individual equipment requirements, for loads and ratings.

2.04 FABRICATION OF METAL WORK:

A. General Fabrication Requirements:

1. Remove burrs from sheared edges of metalwork, ease the corners and smooth to eliminate cutting hazard. Bend sheets of metal, at not less than the minimum radius required to avoid grain separation in the metal. Maintain flat, smooth surfaces, without damage to finish.

2. Reinforce metal at locations of hardware, anchorages and accessory attachments wherever metal is less than 14 gauge (2.0mm), or requires mortised application. Conceal reinforcements to the greatest extent possible. Weld in place, on concealed faces.

3. Exposed screws or bolt heads, rivets and butt joints made by riveting straps under seams and then filled with solder, will not be accepted. Where fasteners are permitted, provide Phillips head, flat or oval head machine screws. Cap threads with acorn nuts, unless fully concealed in inaccessible construction; and provide nuts and lock washers unless metal for tapping is at least 12 gauge (2.5mm). Match fastener head finish with finish of metal fastened.

4. Where components of fabricated metal work are indicated to be galvanized, and involve welding or machining of metal heavier than 16 gauge (1.6mm), complete the fabrication and provide hot-dip galvanizing of each component, after fabrication, to the greatest extent possible (depending upon available dip-tank sizes). Comply with ASTM A123.

5. Welding and Soldering:

   a. Materials 18-gauge (1.27mm), or heavier, shall be welded.

   b. Seams and joints shall be shop welded or soldered as the nature of the material may require.

   c. Welds must be ground smooth and polished to match original finish.

   d. Where galvanizing has been burned off, the weld shall be cleaned and touched up with high grade aluminum paint.

6. Provide removable panels for access to mechanical and electrical service connections, which are concealed behind or within foodservice equipment, but only where access is not possible and not indicated through other work.

7. Closures: Where ends of fixtures, splash back's, shelves, etc., are open, fill by forming the metal, or welding sections, if necessary, to close entire opening flush to walls or adjoining fixtures.

8. Rolled Edges: Rolled edges shall be as detailed, with corners bull nose, ground and polished.

9. Coved Corners: Stainless steel foodservice equipment shall have 1/2 inch (13mm) or larger radius coves in horizontal and vertical corners, and intersections, per N.S.F. standards.

B. Metal and Gauges:

1. Except as otherwise indicated, fabricate exposed metalwork of stainless steel; and fabricate the following components from the gauge of metal indicated, and other components from not less than 20 gauge (0.8mm) metal:

a.	Table and counter tops:	14 gauge.
b.	Sinks and drain boards:	14 gauge.
c.	Shelves:	16 gauge.
d.	Front drawer and door panels:	18 gauge (double pan)
e.	Single pan doors and drawer fronts:	16 gauge.
f.	Enclosed base cabinets:	18 gauge.
g.	Enclosed wall cabinets:	18 gauge.
h.	Exhaust hoods and ventilators:	18 gauge.
i.	Pan-type insets and trays:	16 gauge.
J.	Removable covers and panels:	18 gauge.
k.	Skirts and enclosure panels:	18 gauge.
1.	Closure and trim strips over 4" wide:	18 gauge.
m.	Hardware reinforcement:	12 gauge.
n.	Gusset plates:	10 gauge.

C. Work-Surface Fabrication:

1. Fabricate metal work surfaces by forming and welding, to provide seamless construction; using welding rods matching sheet metal, grinding and polishing. Where necessary for disassembly, provide waterproof gasketed draw-type joints with concealed bolting.

2. Reinforce work surfaces 30 inches on center both ways, with galvanized or stainless steel concealed structural members. Reinforce edges, which are not self-reinforced, by formed edges.

D. Metal Top Construction:

1. Metal tops shall be one-piece welded construction, including field joints. Secure to a full perimeter galvanized steel channel frame cross-braced not farther than 2'-6" (760mm) on center. Fasten top with stud bolts or tack welds. If hat sections are used in lieu of channels, close ends.

2. Properly designed draw fastening, trim strip, or commercial joint material to suit requirement shall be used, only if specified.

E. Structural Framing:

1. Except as otherwise indicated, provide framing of minimum 1 inch (25mm) pipe-size round pipe or tube members, with mitered and welded joints and gusset plates, ground smooth. Provide 14 gauge (2.0mm) stainless steel tubes for exposed framing, and galvanized steel pipe for concealed framing.

2. Where indicated, flange rear and end edges up to form splashes integrally with top, with vertical and horizontal corners coved of not less than 1/4 inch (6mm) radius, die formed. Turn back splashes 1 inch to wall across top and ends with rounded edge on break, unless otherwise specified.

3. For die-crimped edges, use inverted "V" 1/2 inch (13mm) deep inside and 2 inch (38mm) deep on outside, unless otherwise shown. For straight down flanges, make 1-3/4 inch (45mm) deep on outside. For bull nose edges, roll down 1-3/4 inch (45mm).

4. Edges: die-formed, integral with top. For rounded corners, form to 1 inch radius, weld, and polish to original finish.

F. Field Joints: For any field joint required because of size of fixture; butt-joint, reinforce on underside with angles of same material, bolt together with non-corrosive bolts and nuts, field weld, grind and polish.

G. Pipe Bases: Construct pipe bases of 1-5/8 inch (41mm) diameter 18 gauge (1.2mm) stainless steel tubing. Fit legs with polished stainless steel sanitary adjustable bullet feet to provide for adjustment of approximately 1-1/2 inch (38mm), without exposing threads. Space legs to provide ample support for tops, precluding any possibility of buckling or sagging and in no case more than 6'-0" centers.

H. Legs and Cross-rails

1. Equipment legs and cross rails shall be 1-5/8 inch (41mm), 16-gauge (1.59mm) stainless steel tubing.

2. Welds at cross rails shall be continuous and ground smooth. Please note; tack welds are not acceptable.

3. Bottom of legs shall be cambered inward and fitted with a stainless steel bullet-type foot with not less than 2 inch (50mm) adjustment. Flanged feet with bolt holes may be required dependent on design applications. Provide proper type feet in compliance with local codes. Stainless steel to be used in all applications.

4. Free standing legs shall be pegged to floor with 1/4 inch (6mm) stainless steel rod.

5. Components:

   a. Stainless Steel Gusset: Stainless steel exterior to fit 1-5/8 inch (41mm) tubing, with Allen screw for fastening and adjustment. Not less than 3 inches (76mm) diameter at top and 3-3/4 inch (95mm) long. Outer shell 16-gauge (1.6mm) stainless steel, reinforced with 12-gauge (2.5mm) mild steel insert welded interior shell, or approved equal.

   b. Stainless Steel Low Counter Legs: Stainless steel exterior 5-3/4 inch (146mm) minimum, 7 inch (178mm) maximum length with stainless steel 3-1/2 inch (89mm) square plate with four counter-sunk holes, welded to top for fastening.

   c. Stainless Steel Adjustable Foot: Stainless steel 1-1/2 inch (38mm) diameter tapered at bottom to 1 inch (25mm) diameter, fitted with threaded cold rolled rod for minimum 1-

   1/2 inch (38mm) diameter x 3/4 inch (19mm) threaded bushing plug welded to legs, or approved equal. Push-in foot not acceptable.

6. Legs shall be fastened to equipment with gussets, as follows:

   a. Sinks: Reinforced with bushings and set screw.

   b. Metal Top Tables and Dish Tables: Welded to galvanized steel channels, 14-gauge (1.98mm) or heavier, anchored to top with screws through slotted holes.

   c. Wood Top Tables: Welded to stainless steel channels, 14-gauge (1.98mm) or heavier, anchored to top with screws through slotted holes.

I. Shelves:

1. Construct solid shelves under pipe base tables of 16 gauge stainless steel, with 1-1/2 inch turned down and under edges on exposed sides, and 2 inch turn up against walls or equipment. Fully weld to pipe legs.

2. In fixtures with enclosed bases, turn up shelves on back and sides with 1/4 inch (6mm) (minimum) radius and feather slightly to ensure a tight fit to enclosure panels.

J. Sinks:

1. Construct sinks of 14 gauge stainless steel with No.4 finish inside and outside.

2. Form back, bottom and front of one piece, with ends and partitions welded into place. Partitions: double thickness, 1 inch minimum space between walls. Multiple compartments shall be continuous on the exterior, without applied facing strips or panels.

3. Cove interior vertical and horizontal corners of each tub not less than 1/4 inch radius, die formed. Outer ends of drain boards to have roll rim risers not less than 3 inches high.

4. Drill faucet holes in splashes 2-1/2 inches below top edge. Verify center spacing with faucet specified.

5. Sink insets shall be deep drawn of 16-gauge (1.59mm), or heavier, polished stainless steel. Weld into sink drain boards with 1-1/2 inch x 1-1/2 inch x 14 gauge stainless steel angle brackets; securely welded to sinks and galvanized cross angles spot welded to underside of drain boards to form an integral part of the installation.

6. The bottom of each compartment shall be creased such as to ensure complete drainage to waste opening. Slope bottom of sink bowls toward outlet.

K. Drains, Wastes and Faucets:

1. Furnish and install T&S Brass faucets model B-3940-01 stainless steel rotary drain assembly with connected overflow assembly, in die-drawn inset type sinks and bain-marie sinks.

2. Other custom fabricated sinks shall be furnished with T&S Brass faucets model B-3940-01 stainless steel rotary drain assembly, with S/S cap nut over overflow outlet. Waste connection shall have 2 inch (50mm) external thread size, with 1-1/2 inch (38mm) internal thread size.

3. Rotary Handle: Of sufficient length to extend to front edge of sink. No riveting, screws or soldering permitted to fit drains to sinks, with all parts of drains easily removable for servicing and replacement. Rotary handle bracket to be provided as part of the sink fabrication.

4. Water pans for steam tables shall be fitted with 1 inch (25mm) drains with chrome-plated brass stand pipes.

5. All faucets furnished with equipment included in this Section shall be lead free and comply with NSF Standard #61, Section #9; such as manufactured by Fisher, Chicago, or T&S. Where the itemized specifications list a faucet by manufacturer and model, the Kitchen Equipment Contractor (KEC) shall verify that the listed faucet complies with this requirement. If the listed faucet does not comply, the Kitchen Equipment Contractor (KEC) shall submit a similar model which does comply, from the same manufacturer where available or from one of the above manufacturers.

L. Workmanship:

1. Best quality in the trade. Field verify dimensions before fabricating; conform all items to dimensions of building; neatly fit around pipes, offsets and other obstructions.

2. Fabricate only in accordance with approved shop drawings, showing pipes, obstructions to be built around, and location of utilities and services.

M. Enclosures:

1. Provide enclosures, including panels, housings, and skirts for service lines, operating components and mechanical and electrical devices associated with the foodservice equipment, except as specifically indicated to be "open".

2. Where equipment is exposed to customer view, provide enclosure of service lines, operating components and mechanical and electrical devices.

N. Casework:

1. Enclosure: except as otherwise indicated, provide each unit of casework (base, wall, overhead and free-standing) with a complete-enclosure metal cabinet, including fronts, backs, tops, bottoms, and sides.

2. Bases shall be made of 18-gauge (1.27mm) stainless steel sheets reinforced by forming the metal.

3. Ends, partitions and shelves are stainless steel.

4. Unexposed backs and structural members are galvanized.

5. Vertical ends and partitions are single wall, with a 2 inch (50mm) face.

6. Sides and through partitions are flush with bottom rail, welded at intersections.

7. Shelves: Provide adjustable standards for positioning and support of shelves in casework; except bottom shelf of cabinet mounted on legs or as specified. Turn back of shelf units up 2 inches, and hem. Turn other edges down to form open channel. Reinforce shelf units to support 40 pounds per square foot loading, plus 100 percent impact loading.

8. Bottom front rail of bases set on masonry platform shall be continuously closed and sealed to platform.

O. Doors:

1. Metal doors shall be double-cased stainless steel. Outer pans shall be 18-gauge (1.27mm) stainless steel with corners welded, ground smooth and polished. Inner pan shall be 20-gauge (.95mm) stainless steel fitted tightly into outer pan with a sound-deadening material such as Celotex or Styrofoam used as a core. The two pans shall be tack welded together and joints solder filled. Doors shall finish approximately 3/4 inch (19mm) thick, and be fitted with flush recessed type stainless steel door pulls.

2. Wood doors shall be fabricated as detailed. If Formica or other plastic surfaces are used, sides and backs must be laminated.

3. Hinged doors shall be mounted on heavy-duty N.S.F. approved hinges, or as noted on plans or specifications.

P. Drawer Assemblies:

1. Assemblies shall consist of removable drawer body mounted in a ball bearing slide assembly with fully enclosed housing.

2. Slide assembly consists of one pair of 200 pound stainless steel roller bearing extension slides, with side and back enclosure panels, front spacer angle, two drawer carrier angles, secured to slides and stainless steel front.

3. Drawer bodies for general storage are to be 20 inches x 20 inches (508mm x 508mm), with 18 gauge stainless steel containers.

4. Drawers intended to hold food products shall be removable type with 12 x 20 (305mm x 508mm) stainless steel food pans, in a stainless steel assembly.

5. Drawer fronts are double cased, 3/4 inch (19mm) thick, with 18 gauge (1.27mm) stainless steel welded and polished front pan. Steel back pan is tightly fitted and tack welded. Sound deaden with rigid insulation material.

6. Provide drawers with replaceable soft neoprene bumpers or for refrigerated drawers, a full perimeter soft gasket.

Q. Closed Base: Where casework is indicated to be located on a raised-floor base, prepare casework for support without legs, and for anchorage and sealant application, as required for a completely enclosed and concealed base.

R. Support from Floor: Equip floor supported mobile units with casters, and equip items indicated as roll-out units, with manufacturer's standard one-directional rollers. Otherwise, and except for closed-base units, provide pipe or tube legs, with adjustable bullet-design feet for floor supported items of fabricated metalwork. Provide 1-1/2 inch adjustment of feet (concealed threading).

S. Shop Painting:

1. Clean and prepare metal surfaces to be painted; remove rust and dirt. Apply treatment to zinc coated surfaces, which have not been mill phosphatized. Coat welded and abraded areas of zinc coated surfaces, with galvanize repair paint.

2. Apply 1.5 mil (dry film thickness) metal primer coating, followed by 2, 1.0 mil (dry film thickness) metal enamel finish coatings.

3. Bake primer and finish coatings in accordance with paint manufacturer's instructions for a baked enamel finish.

T. Sound Deadening:

1. Sound deaden underside of metal tops, drain boards, under shelves, cabinet interior shelves, etc., above the underbracing/reinforcing/framing only.

2.05 FILTER EXHAUST HOODS, WATER WASH VENTILATOR FABRICATION AND ULTRA-VIOLET:

A. Filter Exhaust Hoods:

1. 18 Gauge type 304 stainless steel external welded construction, in accordance with the latest edition of N.F.P.A. No.96, including all applicable appendices. Exposed welds to be ground and polished.

2. Grease Removal: U.L. classified, non-adjustable, stainless steel grease filters, with drip-channel gutters, drains and collection basins.

3. Light Fixtures: Furnish type of fixture specified. Fixtures shall be U.L. listed for hoods, N.S.F. approved, with sealed safety lenses, with stainless steel exposed conduit for wiring.

4. Exhaust Duct: Furnish welded stainless steel formed duct collars at ceiling or wall duct connections, where exposed. Furnish exposed to view ductwork as specified. Verify size and location of duct connections required in this contract, before fabrication. Other ductwork will be by the Mechanical Section.

5. Fire Extinguishing System: Pre-piped liquid chemical or water fire suppressant system, as specified; complying with applicable local and N.F.P.A. regulations. Wet chemical fire suppression systems shall comply with UL 300 Standards.

B. Water Wash Ventilator:

1. 18 Gauge type 304 stainless steel external welded construction, in accordance with the latest edition of N.F.P.A. No.96, including all applicable appendices. Exposed welds to be ground and polished.

2. Control panel shall be of same manufacture as ventilator, with time clock control for automatic operation. Provide stainless steel trim strips for recessed control cabinet applications. Provide stainless steel chase for surface mounted control panel, from top of panel to ceiling, full width and depth of panel.

3. Light Fixtures: Furnish type of fixture specified. Fixtures shall be U.L. listed for hoods, N.S.F. approved, with sealed safety lenses, with stainless steel exposed conduit for wiring.

4. Exhaust Duct: Furnish welded stainless steel formed duct collars at ceiling or wall duct connections. Verify size and location of duct connections required in this contract, before fabrication. Other ductwork will be by the Mechanical Section.

5. Fire Extinguishing System: Pre-piped liquid chemical or water fire suppressant system, as specified; complying with applicable local and N.F.P.A. regulations. Wet chemical fire suppression systems shall comply with UL 300 Standards.

C. Ultra-Violet Component Grease Elimination Hood:

1. If applicable for this project, refer to Hood Manufacture's Drawings in the Food Service Design Issue of Construction Set, FS-8 sequence.

2.06 REFRIGERATION EQUIPMENT:

A. General:

1. Furnish either single or multiple compressor units, as specified or recommended by the manufacturer for the sizes and variations between connected evaporator loads as indicated.

2. Furnish units of the capacities indicated, arranged to respond to multiple-evaporator thermostats and defrosting timers. Include coils, receivers, compressors, motors, motor starters, mounting bases, vibration isolation units, fans, dryers, valves, piping, insulation, gauges, winter control equipment and complete automatic control system.

3. Refrigerant: Pre-charge units with type or types recommended by manufacturer for services indicated, with quick-disconnect type connections where specified, ready to receive refrigerant piping runs to evaporators and (where remote) to condensers. All refrigerant and associated components shall comply with the requirements of the Montreal Protocol Agreement. No CFC refrigerants or associated components shall be allowed on this Project. HFC refrigerants and components shall be used where available. HCFC refrigerants and components, with a minimum 2010 phase-out date, and intermediate replacement refrigerants are to be used only when HFC refrigerants are not available. Kitchen Equipment Contractor (KEC) shall be responsible for coordinating with manufacturers. Provide refrigerant leak monitoring devices where required by federal, state, or local codes.

4. The minimum outdoor operating ambient temperature for design of units is -10 degrees Fahrenheit, or as applicable for extreme low local conditions. The maximum indoor design temperature for operation of compressor units is 95 degrees Fahrenheit. The maximum outdoor ambient design temperature shall be determined with prevailing conditions at mounting location(s) of compressor(s), such as sun exposure, limited ventilation, high

fences/walls, roof color and materials, local climatic extremes, etc.; but in no case shall it be less than 100 degrees Fahrenheit.

B. Components:

1. Coils: Coils for fabricated refrigerators shall have vinyl plastic coatings, stainless steel housings; and shall be installed in such a manner as to be replaceable.

2. Expansion Valves: Remote refrigeration system shall be complete with thermostatic expansion valves at the evaporator.

3. Thermometers:

a. Fabricated refrigerated compartments to be fitted minimally with flush dial thermometers, with chrome plated bezels and to be provided as specified.

b. Thermometers shall be adjustable, and shall be calibrated after installation.

c. Thermometers shall have an accuracy of ± 2 degrees Fahrenheit (1 degree Centigrade).

4. Hardware:

a. Refrigerator hardware for fabricated refrigerator compartments shall be heavy-duty components.

b. Self closing hinges.

c. Latches to be magnetic edge mount type, unless specified or detailed otherwise.

5. Locks:

a. Doors and drawers for walk-in coolers/freezers, and reach-in refrigerated compartments, both fabricated and standard, shall be fitted with cylinder locking type latches, and provided with master keys.

C. Cold Pans: Ice pans, refrigerated pans and cabinets shall be provided with breaker strips, where adjoining top or cabinet face materials, to prevent transfer of cold.

D. All open top mechanically cooled custom fabricated or standard buy-out refrigerators and/or cold pans shall comply with NSF Standard #7 requirements, as of April 1, 1998. The Kitchen Equipment Contractor (KEC) shall verify that the specified unit complies with this requirement; or shall submit a similar model, which does comply, from the same manufacturer where available.

E. Ventilation of Refrigerated Equipment:

1. Adequate ventilation shall be provided for custom fabricated equipment with integral refrigeration condensing units, both built-in and drop-in. If flow through ventilation cannot be provided, provide flow direction partitions and an additional fan capable of cooling the condensing unit.

2. If, in the opinion of the Kitchen Equipment Contractor (KEC), additional room ventilation is required to ensure correct operating temperatures of standard buy-out, custom fabricated, or remote refrigeration condensing units, or compressor rack assemblies, they shall so state in a letter to the Architect and Theodore Barber & Company, Inc., for evaluation and direction.

2.07 MISCELLANEOUS MATERIALS:

A. Nameplates: Whenever possible, locate nameplates and labels on manufactured items, in accessible position, but not within customer's normal view. Do not apply name-plates or labels on custom fabricated work, except as required for compliance with governing regulations, insurance requirements, or operator performance.

B. Manufactured Equipment Items: Furnish items as scheduled or herein specified. Verify dimensions, spaces, rough-in and service requirements, and electrical characteristics, before ordering. Provide trim, accessories and miscellaneous items for complete installation.

C. Insert Pans:

1. General: Cut-outs, openings, drawers, or equipment specified or detailed to hold stainless steel insert pans shall be provided with a full complement of pans as follows:

a. One (1) stainless steel, 20-gauge (0.95mm) minimum, solid insert pan for each space, sized per plans, details, or specifications.

b. Where pan sizes are not indicated in plans, details, or specifications, provide one full-size pan for each opening.

c. Provide maximum depth pan to suit application and space.

2. Provide 18-gauge (1.27mm) removable stainless steel adapter bars where applicable.

3. All cut-outs and openings, or equipment specified or detailed to hold stainless steel insert pans, shall be provided with a hinged stainless steel removable night cover.

D. Tray Slides: Before fabrication of counters with tray slides, verify:

1. Size and shape of tray. Edge of tray shall not overhang outer support/slider by more than 2". If edge of tray exceeds this dimension, notify Architect and Theodore Barber & Company, Inc., in writing, for evaluation and adjustment, if necessary.

2. Configuration of corners, turns, and shape of tray slides for proper support and safe guidance of trays.

3. Tray slide capable of supporting 200 pounds per linear foot, live load.

E. Self-leveling dispensers: Verify type and make of ware, dimensions and weight; request samples from Operator and submit to the dispenser manufacturer, for proper sizing and calibration of dispensers.

F. Carbon dioxide (co') equipment: Where equipment requires connection with compressed co' cylinder for operation, provide proper sized cylinder manifold and control system (integral with equipment) with proper connectors for Department of Transportation (DOT) approved type cylinders, complete with cylinder safety devices and supports.

G. Reasonable quietness of operation of equipment is a requirement, and the Kitchen Equipment Contractor will be required to replace or repair any equipment producing out-of-the-ordinary intolerable noise. This also includes providing and installing bumpers and gaskets for doors and drawers on fabricated and standard manufactured items and sound insulation where feasible.

PART 3 – EXECUTION

3.01 SUPERVISION:

A competent supervisor, representing the Kitchen Equipment Contractor (KEC), shall be present at all times during progress of the Kitchen Equipment Contractor (KEC)'s work.

3.02 SITE EXAMINATION:

A. Verify site conditions under the provisions of the General Conditions, Supplementary Conditions and applicable provisions of Division 1 Sections. Notify the Architect, in writing, of unsatisfactory conditions for proper installation of foodservice equipment.

B. Verify wall, column, door, window, and ceiling locations and dimensions. Fabrication and installation should not proceed until dimensions and conditions have been verified and coordinated with fabrication details.

C Verify that wall reinforcement or backing has been provided, and is correct for wall supported equipment. Coordinate placement dimensions with wall construction Section.

D. Verify that ventilation ducts are of the correct characteristics, and in the required locations.

E. Verify that utilities are available, of the correct characteristics, and in the required locations.

3.03 INSTALLATION:

A. Sequence installation and erection to ensure correct mechanical and electrical utility connections are achieved.

B. Install items in accordance with manufacturer's instructions.

C. Set each item of non-mobile and non-portable equipment securely in place, leveled and adjusted to correct height. Anchor to supporting substrate where indicated, and where required for sustained operation and use without shifting or dislocation. Conceal anchorages wherever possible. Adjust counter tops and other work surfaces to a level tolerance of 1/16 inch (maximum offset, and plus or minus on dimension, and maximum variation in 2'-O" run from level or indicated slope). Provide anchors, supports, bracing, clips, attachments, etc., as required to comply with the local seismic restraint requirements. The Guidelines for Seismic Restraint of Kitchen Equipment, as prepared for the Sheet Metal Industry Fund of Los Angeles and endorsed by S.M.A.C.N.A., should be followed.

D. Complete field assembly joints in the work (joints which cannot be completed in the shop) by welding, bolting-and-gasketing, or similar methods as indicated and specified. Grind welds smooth and restore finish. Set or trim flush, except for "T" gaskets as indicated.

E. Provide closure plates and strips where required, with joints coordinated with units of equipment.

F. Provide sealants and gaskets all around each unit to make joints airtight, waterproof, verminproof, and sanitary for cleaning purposes.

G. Joints up to 3/8 inch wide, to be stuffed with backer rod, to shape sealant bead properly, at 1/4 inch depth.

H. At internal corner joints, apply sealant or gaskets to form a sanitary cove, of not less than 3/8 inch radius.

I. Shape exposed surfaces of sealant slightly concave, with edges flush with faces of materials at joint.

J. Provide sealant filled or gasketed joints up to 3/8 inch joint width. Wider than 3/8 inch, provide matching metal closure strips, with sealant application each side of strips. Anchor gaskets mechanically, or with adhesives to prevent displacement.

K. Treat enclosed spaces, inaccessible after equipment installation, by covering horizontal surfaces with powdered borax at a rate of 4 ounces per square foot.

L. Insulate to prevent electrolysis between dissimilar metals.

M. Cut and drill components for service outlets, fixtures, piping, conduit, and fittings.

N. Coordinate the installation of approved dry pendant sprinkler head in each cooler and freezer. Sprinkler heads should be installed in coolers/freezers only if required by local codes.

O. Verify and coordinate the mounting heights of all wall shelves and equipment, with equipment located below them, for proper clearances.

P. Coordinate with the Plumbing and Electrical Divisions, and provide holes in food service equipment for plumbing and electrical service to and through the fixtures, as required. This includes welded sleeves, collars, ferrules, or escutcheons. These services are to be located so that they do not interfere with intended use and/or servicing of the fixture. No alterations of the building are allowed with out written permission by the General Contractor and/or Architect. (i.e. – routing refrigerant lines)

3.04 ADJUSTING:

A. Test and adjust equipment, controls and safety devices to ensure proper working order and conditions.

B. Repair or replace equipment which is found to be defective in its operation, including units which are below capacity or operating with excessive noise or vibration.

3.05 CLEANING AND RESTORING FINISHES:

A. After completion of installation, and completion of other major work in foodservice areas, remove protective coverings and clean foodservice equipment, internally and externally.

B. Restore exposed and semi-exposed finishes, to remove abrasions and other damages; polish exposed metal surfaces and touch-up painted surfaces. Replace work, which cannot be successfully restored.

C. Polish glass, plastic, hardware and accessories, fixtures and fittings.

D. Wash and clean equipment, and leave in a condition ready for the Owner to sanitize and use.

3.06 TESTING, START-UP AND INSTRUCTIONS:

A. Delay the start-up of equipment until service lines have been tested, balanced, and adjusted for pressure, voltage and similar considerations; and until water and steam lines have been cleaned and treated for sanitation.

B. Make arrangements for demonstration of foodservice equipment operation and maintenance, in advance with the Owner/Operator.

C. Demonstrate foodservice equipment, to familiarize the Owner and the Operator on operation and maintenance procedures, including periodic preventative maintenance measures required. Include an explanation of service requirements and simple on-site service procedures, as well as, information concerning the name, address and telephone number of qualified local source of service. The individual performing the demonstration shall be knowledgeable of operating and service aspects of the equipment.

D. Provide a written report of the demonstration, to the Owner, outlining the equipment demonstrated and malfunctions or deficiencies noted. Indicate individuals present at demonstration.

E. Final Cleaning: After testing and start-up, clean the foodservice equipment, and leave in a condition ready for the Owner to sanitize and use.

3.07 CLEAR AWAY:

Throughout the progress of their work, the Kitchen Equipment Contractor (KEC) shall keep the working area free from debris, and shall remove rubbish from premises resulting from work being done by them. At the completion of their work, the Kitchen Equipment Contractor (KEC) shall leave the premises in a clean and finished condition.

PART 4 - EXISTING EQUIPMENT (APPLICABLE TO ONLY PROJECTS WITH REUSED EXISTING EQUIPMENT)

4.01 REUSED EXISTING EQUIPMENT:

A. This Kitchen Equipment Contractor (KEC) shall be responsible for identifying, tagging and/or removing all existing equipment, which will be reused. Verify and coordinate specific equipment with these plans and specifications, and the Owner. This shall include items existing, and the associated work necessary, at the time of the signing of the Contract for the Foodservice Equipment section; and shall not include any item(s) added, changed, or damaged (by other than the Kitchen Equipment Contractor (KEC)) after the signing; except to the extent of work which would have been included with the original existing item(s).

B. Remove from existing locations, clean and renovate as noted below, store and re-install existing equipment to be reused, in the new locations as shown on plans; ready for utility connections, as appropriate. Existing equipment to be reused, with utility connections, shall be removed after disconnection as noted in paragraph J, below.

C. Do work in cooperation with Owner, so that normal functioning of services is minimally interrupted. Coordinate all removal and replacement scheduling with the Construction Scheduling Manager (or similar responsible party), to insure adequate time to complete the necessary work. If adequate time to properly relocate and reset the existing items, and complete all cleaning and repair will not be available, due to continuing use of the existing item(s), or the allotted construction time; contact the Owner and obtain a written agreement as to what work is to be deleted or delayed; such as cleaning, repainting, or repairs.

D. All surface dirt, grease, oil, food residues, ingredients, extraneous matter and other soiling materials shall be removed in order to obtain minimum acceptable sanitation and food service standards. Thorough final rinsing of all cleaning agents shall be at a minimum temperature of 180 degrees F where possible without damage to equipment or controls. Otherwise, use USDA approved cleaning agents and/or cleaning agents, which are acceptable for use with commercial food service equipment. This shall include all exterior surfaces of the existing equipment to be reused, and interior work surfaces such as inside oven compartments, fryer vats, ware washers, etc.

E. All painted items with major paint blemishes shall be sanded, primed, and repainted to match the original color and type paint. Primer and paint shall be of a type approved for use with commercial food service equipment. All controls, lights, view windows, non-painted parts, etc. shall be protected as recommended by the Manufacturer. Minor paint blemishes shall be touched-up in a professional manner. This work shall be included in the Bid Submittal, as a separate line cost, at the end of the Bid Submittal.

F. Replace or repair minor broken parts to produce a cleanable and functional item, where possible. Repairs and/or parts shall be for minor required items such as control knobs, handles, pilot lamps, belts, oil changes, minor adjustments and recalibrations, etc. This shall not include addition or replacement of any wearing components such as cutters, blades, etc.; or any accessory components such as mixer beaters,
hooks, whips, etc., except for presently existing accessory components which are broken and non-functional, or as noted in the itemized specifications.

G. Cost estimates for any repairs and/or parts more than the minor items stated above, or repairs requiring significant disassembling of the item, shall be submitted to the Owner, for consideration and approval as an addition to the Contract. In general, this would be considered as any repairs and/or parts amounting to an estimate up to 10% of the cost of a comparable new item. Any item, which would require repairs and/or parts amounting to an estimate up to 25% or more, shall include an alternate cost for supplying a comparable new item as a consideration by the Owner, and addition to the Contract. Estimates are for each individual reused existing item only, which requires repairs and/or parts, and only to the extent that work is actually required; and shall not be considered as a lump sum estimate on all reused existing items combined, or as an allowance for adding accessories or options.

H. Where required, remove reused existing equipment from the premises for repairs, alterations and cleaning.

I. Refer to schedule on the Foodservice Drawings and to the Itemized Specifications at the end of this section, for reused existing equipment.

J. Disconnection of existing equipment to be relocated and/or reused and disconnection and removal/disposal of existing equipment, which will not be reused, shall be work as designated by the Architect, and not included in this Section. (See page 11400-1, 1.02.E.)

4.02 EXISTING EQUIPMENT: (as applicable)

It is the Kitchen Equipment Contractor (KEC)'s responsibility to survey the existing hoods and fire suppression systems to ensure compliance with code. If it does not meet code, the Kitchen Equipment Contractor (KEC) must submit in writing what it will take to bring to code and to provide an estimate of cost to RJS+ASSOCIATES, LLC, to meet code.

PART 5 - ITEMIZED SPECIFICATIONS

Refer to the following pages for specific specification information on each item included in this Section.

PART 6 - STANDARD DETAILS

Refer to the individual Standard Details following the Itemized Specifications (or included in the Foodservice Equipment contract drawings), for general fabrication information; as referenced in the custom fabricated Itemized Specification.

PART 7 - SPECIAL INSTRUCTIONS

A. MANDATORY REQUIREMENT: Refer to page 11400-1, 1.04 Specifier Identification System, for SIS code number requirement on all documentation. (International Work Only)

B. Refer to Interior Design Sections 5, 6, and 9 for decor finish specifications and any associated drawings. KEC shall be responsible for obtaining these documents, and coordinating the pertinent information contained in them, with applicable manufacturers and fabricators. (Verify included Sections with I.D.). (Applicable to Projects with decor construction and/or finishes.)

8.00 FOOD SERVICE EQUIPMENT SCHEDULE (Item Data Sheets attached)

ITEM #1 MOP SINK CABINET

Quantity: One (1)
Manufacturer: Advance Tabco
Model: 9-OPC-84

Furnish and set in place per manufacturer's standard specifications.

1. Cabinet with Mop Sink, 25-3/16"W x 22-3/4"D x 84"H, mop sink base with drain (bowl 16” x 20” x 12”), left hinged door, (2) mop holders, (1) fixed intermediate shelf, slotted side panels for ventilation, 16/304 series stainless steel sink bowl, 18/304 series stainless steel sink bowl apron, 18/430 series stainless steel cabinet, NSF (right hinged door available on request)

ITEM #1A SERVICE FAUCET

Quantity: One (1)
Manufacturer: Advance Tabco
Model: K-240

Furnish and set in place per manufacturer's standard specifications.

1. Service Sink Faucet, wall mount, 8" OC, 6-1/2" spout, with hose thread & pail hook, vacuum breaker spout, wall braced, chrome-plated brass

ITEM #2 REACH-IN REFRIGERATOR

Quantity: One (1)
Manufacturer: True Mfg. - General Foodservice
Model: T-49-HC

Furnish and set in place per manufacturer's standard specifications and the following:

1. Refrigerator, reach-in, two-section, (2) stainless steel doors, (6) PVC coated adjustable wire shelves, interior lighting, stainless steel front, aluminum sides, aluminum interior with stainless steel floor, 4" castors, R290 Hydrocarbon refrigerant, 1/2 HP, 115v/60/1-ph, 5.4 amps, NEMA 5-15P, cULus, UL EPH Classified, Made in USA, ENERGY STAR®
2. Note: Due to the continued supply chain issues in the industry all True pricing is tentative based on final production dates. Any units ordered that will be produced on or after October 1st, 2022 may be subject to additional pricing escalators. Please contact your True representative for final lead times.
3. Self-contained refrigeration standard
4. Warranty - 7 year compressor (self-contained only), please visit www.Truemfg.com for specifics
5. Warranty - 3 year parts and labor, please visit www.Truemfg.com for specifics

6. Left door hinged left, right door hinged right standard
7. 4" stem castors, standard (adds 5" to OA height)

ITEM #3 WIRE SHELVING UNIT

Quantity: Three (3)
Manufacturer: Metro
Model: EZ2436NK3-4

Furnish and set in place per manufacturer's standard specifications.

1. Super Erecta® Convenience Pak Shelving Unit, 36"W x 24"D x 74"H, (4) wire shelves with clips & (4) split posts with adjustable feet, Metroseal 3™ finish, KD, NSF

ITEM #4 SPARE NO.

ITEM #5 CORNER SINK

Quantity: One (1)
Manufacturer: Advance Tabco
Model: 94-K2-24D

Furnish and set in place per manufacturer's standard specifications and the following:

1. Corner Sink, 3-compartment, (3) 20" x 20" x 12" deep bowls, with 24" left & right-hand drainboards, with 8"H backsplash, stainless steel open frame base, side crossrails, adjustable stainless steel bullet feet, 16 gauge 304 stainless steel, 71" x 71" overall, NSF (requires 2 faucets)
2. Lever Waste Drain, twist handle operated with built in overflow, fits 3-1/2" drain opening, 2" NPT & 1-1/2" IPS outlet connections
3. Support Bracket, for lever waste drain handle, (1) support required for each lever drain
4. Modify Drainboard to fit Dishwasher.

ITEM #5A PRE-RINSE FAUCET ASSEMBLY, WITH ADD ON FAUCET

Quantity: One (1)
Manufacturer: T&S Brass
Model: B-0133-A12-08

Furnish and set in place per manufacturer's standard specifications and the following:

1. EasyInstall Pre-Rinse Unit, 8" wall mount, adjustable centers, EasyInstall 12" add-on faucet with stream regulator, spring action gooseneck, quarter-turn Eterna cartridges with spring checks, lever handles with color coded indexes, 18"rigid riser, 44" flexible stainless steel hose, 1.07 GPM JeTSpray spray valve, 1/2" NPT, low lead, NSF, cCSAus
2. Replacement Hex Swivel, low-lead, rubber seals, chrome-plated brass, 7/8" NPT, NSF (for pre-rinse hose & spray valves)
3. Tee Assembly, rigid, chrome-plated
4. Wall Bracket, 6"
5. Inlet Kit, 1/2" NPT nipple, close elbows, 24" flex supply hoses
6. 3 year limited warranty, standard

ITEM #5B WALL / SPLASH MOUNT FAUCET

Quantity: One (1)
Manufacturer: T&S Brass
Model: B-0231

Furnish and set in place per manufacturer's standard specifications and the following:

1. Sink Mixing Faucet, wall mount, 8" centers, 12" swing nozzle, lever handles, quarter-turn Eterna cartridges, 1/2" NPT female inlets, low lead, ADA Compliant
2. Inlet Kit, 1/2" NPT nipple, close elbows, 24" flex supply hoses

ITEM #5C POT RACK

Quantity: One (1)
Manufacturer: Fabricator
Model: STAINLESS STEEL

Furnish and set in place per manufacturer's standard specifications and the following:

1. Similar to standard detail FD-3.8. This standard detail is to be utilized as a basic minimum guideline only. Refer to these written specifications and any fabrication details included in the contract drawings for precise and complete fabrication instructions.
2. Install in place as shown on plans using stainless steel fasteners.
3. Length, width and configuration per plan.
4. Field verify room dimensions and adjust size as may be required.
5. Verify and coordinate mounting height of shelves with Owner/Operator and equipment located below bottom shelf.
6. Coordinate installation above Item #635, PowerSoak Sink.

ITEM #6 WIRE SHELVING

Quantity: One (1)
Manufacturer: Metro
Model: 1448NK3

Furnish and set in place per manufacturer's standard specifications and the following:

1. Super Erecta® Shelf, wire, 48"W x 14"D, Metroseal™ Green epoxy-coated corrosion-resistant finish with Microban® antimicrobial protection, plastic split sleeves are included in each carton, NSF
2. Super Erecta® SiteSelect™ Post, 73-7/8"H, for use with stem casters, Metroseal 3 Green epoxy coated corrosion-resistant finish with Microban® antimicrobial protection

ITEM #7 DISHWASHER, DOOR TYPE, VENTLESS

Quantity: One (1)
Manufacturer: Hobart
Model: AM16VLT-ADV-2

Furnish and set in place per manufacturer's standard specifications and the following:

1. Ventless Dishwashing Machine, tall chamber (27") door type, energy recovery, automatic soil removal (ASR), drain water energy recovery (DWER), high temp sanitizing, 208-240/60/3 (field convertible to single phase), internal condensing system, 38 racks/hour, straight-thru or corner installation, user-friendly smart touchscreen controls, Sense-A-Temp™ booster, electric tank heat, X-shaped wash arms, scrap screen and basket, door actuated start, door lock, stainless steel tank, tank shelf, chamber, trim panels, frame & feet, pumped drain air gap, drain water tempering, cULus, NSF, ENERGY STAR®. Factory Startup - Free for installations within 100 miles of a Hobart Service Office during normal business hours with appropriate notice; installation beyond 100 miles will be quoted by Service.
2. Standard warranty - 1-Year parts, labor & travel time during normal working hours within the USA
3. Water Hammer Arrestor – Assembly includes ¾” brass pressure regulator, pressure gauge, shock arrestor and garden hose adapter

ITEM #8 CLEAN DISHTABLE

Quantity: One (1)
Manufacturer: Advance Tabco
Model: DTC-S70-36L

Furnish and set in place per manufacturer's standard specifications and the following:

1. Dishtable, clean, straight design, attaches to left of dish machine operator, 10-1/2"H backsplash, 3" rolled front & side rims, stainless steel legs, with crossrails, 35"W x 30"D x 34"H, 16/304 stainless steel
2. SPECIFY DISH MACHINE BRAND & MODEL to ensure proper fit, refer to attached document (AQ only) or consult www.advancetabco.com for compatibility listing. Certain dish machines require modifications at additional cost not shown here

ITEM #9 HAND SINK

Quantity: One (1)
Manufacturer: Advance Tabco
Model: 7-PS-61

Furnish and set in place per manufacturer's standard specifications and the following:

1. Hand Sink, wall mounted, 14" wide x 10" front-to-back x 5" deep bowl, 20 gauge 304 stainless steel, electronic faucet (battery & 110v options both supplied), basket drain, wall bracket, NSF, cCSAus
2. Thermostatic Mixing Valve, for knee pedal, foot pedal and electronic hand sinks and valves

ITEM #9A PAPER TOWEL DISPENSER

Quantity: One (1)
Manufacturer: By Vendor
Model: BY VENDOR

Furnish and set in place per manufacturer's standard specifications.

1. Paper Towel Dispenser as required by Owner/Vendor

ITEM #9B SOAP DISPENSER

Quantity: One (1)
Manufacturer: By Vendor

Model: BY VENDOR

Furnish and set in place per manufacturer's standard specifications.

1. Soap Dispenser as required by Owner/Vendor

ITEM #9C TRASH RECEPTACLE, INDOOR

Quantity: One (1)
Manufacturer: Rubbermaid Commercial Products
Model: FG354060GRAY

Furnish and set in place per manufacturer's standard specifications.

1. Slim Jim® Container, 23 gallon, 22"W x 11"D x 30"H, with venting channels, molded-in handles, general purpose waste, open type without lid, high-impact plastic construction, gray, Made in USA

ITEM #10 SPARE NO.

ITEM #11 TRASH RECEPTACLE, INDOOR

Quantity: One (1)
Manufacturer: Rubbermaid Commercial Products
Model: FG354060BLA

Furnish and set in place per manufacturer's standard specifications.

1. Slim Jim® Container, 23 gallon, 22"W x 11"D x 30"H, with venting channels, molded-in handles, general purpose waste, open type without lid, high-impact plastic construction, black, Made in USA

ITEM #12 REACH-IN REFRIGERATOR

Quantity: One (1)
Manufacturer: True Mfg. - General Foodservice
Model: T-72-HC

Furnish and set in place per manufacturer's standard specifications and the following:

1. Refrigerator, reach-in, three-section, (3) stainless steel doors, (9) PVC coated adjustable wire shelves, interior lighting, stainless steel front, aluminum sides, aluminum interior with stainless steel floor, 4" castors, R290 Hydrocarbon refrigerant, 3/4 HP, 115v/60/1-ph, 6.9 amps, NEMA 5-15P, cULus, UL EPH Classified, Made in USA
2. Note: Due to the continued supply chain issues in the industry all True pricing is tentative based on final production dates. Any units ordered that will be produced on or after October 1st, 2022 may be subject to additional pricing escalators. Please contact your True representative for final lead times.
3. Self-contained refrigeration standard
4. Warranty - 7 year compressor (self-contained only), please visit www.Truemfg.com for specifics
5. Warranty - 3 year parts and labor, please visit www.Truemfg.com for specifics
6. Left door hinged left, center & right doors hinged right, standard
7. 4" stem castors, standard (adds 5" to OA height)

ITEM #13 REACH-IN FREEZER

Quantity: One (1)
Manufacturer: True Mfg. - General Foodservice
Model: T-49F-HC

Furnish and set in place per manufacturer's standard specifications and the following:

1. Freezer, reach-in, two-section, -10°F, (2) stainless steel doors, (6) PVC coated adjustable wire shelves, interior lighting, stainless steel front, aluminum sides, aluminum interior with stainless steel floor, 4" castors, R290 Hydrocarbon refrigerant, 1 HP, 115v/60/1-ph, 9.6 amps, NEMA 5-15P, Made in USA, cULus, UL EPH Classified, ENERGY STAR®
2. Note: Due to the continued supply chain issues in the industry all True pricing is tentative based on final production dates. Any units ordered that will be produced on or after October 1st, 2022 may be subject to additional pricing escalators. Please contact your True representative for final lead times.
3. Self-contained refrigeration standard
4. Warranty - 7 year compressor (self-contained only), please visit www.Truemfg.com for specifics
5. Warranty - 3 year parts and labor, please visit www.Truemfg.com for specifics
6. Left door hinged left, right door hinged right standard
7. 4" stem castors, standard (adds 5" to OA height)

ITEM #14 ICE MAKER WITH BIN, CUBE-STYLE

Quantity: One (1)
Manufacturer: Manitowoc
Model: UDF0240A

Furnish and set in place per manufacturer's standard specifications and the following:

1. NEO® Undercounter Ice Maker, cube-style, air-cooled, self contained, 26"W x 28"D x 38-1/2"H, production capacity up to 215 lb/24 hours at 70°/50° (160 lb AHRI certified at 90°/70°) 90 lbs ice 90 lb ice storage capacity, electronic controls, full bin and service indicators, production delay of (4, 12, or 24 hours), Alpha-San anti-microbial protection, forward sliding storage bin for access to refrigeration components, sealed foodzone with removable water trough, distribution tube and damper door, dice size cubes, 6" adjustable legs with flanged feet (painted gray), 1/3 HP, NSF, cULus, CE
2. 3 year parts & labor (Machine), 5 year parts & labor (Evaporator), 5 year parts & 3 years labor (Compressor), standard
3. (-161B) 115v/60/1-ph, 7.0 amps, cord with NEMA 5-15P
4. Casters, 2.5", for use with NEO, Q-Series (not QM), & D-170 bin, (4) each, non-locking swivel
5. Surcharge 5%

ITEM #14A WATER FILTRATION SYSTEM, FOR ICE MACHINES

Quantity: One (1)
Manufacturer: 3M Purification
Model: ICE120-S

Furnish and set in place per manufacturer's standard specifications.

1. (5616003) 3M™ Water Filtration Products Water Filter System, with gauge, 17"H x 4.5"D, valve-in-head, standard water, single vessel, 1/4-turn shut off valve, max pressure of 125 psi at 100°F, 0.5 micron, 1.5 gpm flow rate, 9,000 gallons capacity, for sediment, chlorine taste & odor, cyst, scale, includes: (1) integral mounting bracket and (1) o-ring seal cartridge filter, 3/8" FNPT connections, NSF certified (for ice

machines - cubers up to 750lbs, flakers up to 1200lbs: Manitowoc I 0302, 0303, 0304, 0305, 0322, 0323, 0324, 0325, 0452, 0453, 0454, 0455, 0502, 0503, 0504, 0505, 0522, 0523, 0523, 0524, 0525, 0594, 0592, 0606, 0696, Scotsman C 0322, 0330, 0522, 0530, 0630, Hoshizaki IM500, KM 250, 320, 351, 410, 450, 451, 515, 600, 631, 650, Ice-O-Matic ICE 0250, 0305, 0320, 0400, 0406, 0500, 0506, 0520, 0525, 0605, 0606, Koolaire K0250, 0350, 0420, 0500, 0600, Atosa YR140, YR280, YR450)

ITEM #15 HEATED HOLDING CABINET

Quantity: One (1)
Manufacturer: Alto-Shaam
Model: 1200-UP

Furnish and set in place per manufacturer's standard specifications and the following:

1. Halo Heat® Low Temperature Holding Cabinet, double compartment, on/off simple controller with adjustable thermostats, indicator light, (2) sets of chrome plated universal side rails, (4) sets of pan slides, (16) 20" x 12" x 2-1/2" full size pan capacity, heavy stainless steel exterior, 5" casters; 2 rigid, 2 swivel with brakes, EcoSmart®, cULus, UL EPH Classified, CE, IPX4, TUV NORD, EAC
2. NOTE: Subject to Manufacturer’s Terms & Conditions. See Documents Section
3. 120v/50/60/1-ph, 1.9 kW, 16.0 amps, NEMA 5-20P, standard
4. Solid door, hinged on right, standard
5. Caster Package, 5" swivel casters

ITEM #16 WORK TABLE

Quantity: One (1)
Manufacturer: Fabricator
Model: STAINLESS STEEL

Furnish and set in place per manufacturer's standard specifications and the following:

1. See plans for location and placement of item with reference to adjoining equipment.
2. Similar to standard details FD-1.1A, FD-1.2A, FD-1.4, FD-1.5a, FD-1.8, FD-4.4 and FD-4.5. These standard details are to be utilized as basic minimum guidelines only. Refer to these written specifications and any fabrication details included in the contract drawings for precise and complete fabrication instructions.

ITEM #17 RANGE, 60", 6 BURNERS, 24" GRIDDLE

Quantity: One (1)
Manufacturer: Vulcan
Model: 60SC-6B24G

Furnish and set in place per manufacturer's standard specifications and the following:

1. Endurance™ Restaurant Range, gas, 60", (6) 30,000 BTU burners with lift-off burner heads, (1) 24" manual griddle, 3/4" thick, 4" wide front grease trough, (1) standard oven base (left), (1) convection oven base (right), stainless steel front, sides, backriser & high shelf, fully MIG welded frame, 6" adjustable legs, 278,000 BTU, CSA Flame, CSA Star, NSF
2. 1 year limited parts & labor warranty, standard
3. Gas type to be specified
4. 115v/60/1-ph, cord & plug, standard
5. Griddle on right side, standard

6. Note: The griddle being placed on the right will automatically move the 26" oven to the right
7. Stainless steel backriser & lift-off high shelf, standard
8. Casters, 5" (set of 4) (2 with locks) (quantity of 2 required)

ITEM #17A BLUE HOSE GAS CONNECTOR KIT

Quantity: One (1)
Manufacturer: Dormont Manufacturing
Model: 16100KIT2S48PS

Furnish and set in place per manufacturer's standard specifications.

1. Dormont Blue Hose™ Moveable Gas Connector Kit, 1" inside dia., 48" long, covered with stainless steel braid, coated with blue antimicrobial PVC, (1) SnapFast® QD, (2) Swivel MAX®, (1) full port valve, (1) pair Safety Set® with hardware mounting options, limited lifetime warranty

ITEM #18 MOBILE HEATED CABINET

Quantity: One (1)
Manufacturer: Hatco
Model: FSHC-7-1

Furnish and set in place per manufacturer's standard specifications and the following:

1. Flav-R-Savor® Holding Cabinet, Mobile Heated, thermostatically-controlled heat, electrical components, water reservoir, insulated, (1) door, digital temperature readout, adjustable humidity & temperature, (7) adjustable removable slides for 18" x 26" or 12" x 20" pans, slides on 1-1/2" centers, large swivel casters with wheel locks, 1697 watts, NSF, CE, cULus, Made in USA
2. NOTE: Sale of this product must comply with Hatco's Minimum Resale Price Policy; consult order acknowledgement for details
3. NOTE: Includes 24/7 parts & service assistance, call 800-558-0607
4. One year on-site parts & labor warranty, plus one additional year parts only warranty on all Flav-R-Savor® metal sheathed air heating elements
5. 120v/60/1-ph, 1697 watts, 14.1 amps, NEMA 5-15P (domestic voltage), standard
6. Silver gray side panels (available at time of purchase only)
7. Silver gray top (available at time of purchase only)
8. Casters, low profile in lieu of standard casters (for 32-3/4" H) (available at time of purchase only)

ITEM #19 CONVECTION OVEN, GAS

Quantity: One (1)
Manufacturer: Vulcan
Model: VC44GD

Furnish and set in place per manufacturer's standard specifications and the following:

1. Convection Oven, gas, double-deck, standard depth, solid state controls, electronic spark igniters, 60 minute timer, (5) nickel plated racks per oven, 8" high legs, stainless steel front, top & sides, stainless steel doors with windows, (2) 50,000 BTU, NSF, CSA Star, CSA Flame, ENERGY STAR®
2. 1 year limited parts & labor warranty, standard
3. Gas type to be specified
4. (2) 120v/60/1-ph, 15.4 amps total, (2) cords with plugs, standard
5. Gas manifold piping included with stacking kit to provide single point gas connection

ITEM #19A BLUE HOSE GAS CONNECTOR KIT

Quantity: One (1)
Manufacturer: Dormont Manufacturing
Model: 1675KIT2S48PS

Furnish and set in place per manufacturer's standard specifications.

1. Dormont Blue Hose™ Moveable Gas Connector Kit, 3/4" inside dia., 48" long, covered with stainless steel braid, coated with blue antimicrobial PVC, (1) SnapFast® QD, (2) Swivel MAX®, (1) full port valve, (1) Snap'N Go, (1) pair Safety Set® with hardware mounting options, limited lifetime warranty

ITEM #20 SPARE NO.

ITEM #21 EXHAUST HOOD

Quantity: One (1)
Manufacturer: Captive-Aire
Model: ND2

Furnish and set in place per manufacturer's standard specifications.

1. The model ND-2 is an exhaust only canopy hood rated for all types of cooking equipment. The hood shall have the size, shape and performance specified on drawings.

   Construction shall be type 430 stainless steel, with a #3 or #4 polish where exposed. The manufacturer, ETL and NSF shall determine the individual component construction. Construction shall be dependent on the structural application to minimize distortion and other defects. All seams, joints and penetrations of the hood enclosure to the lower outermost perimeter that directs and captures grease-laden vapor and exhaust gases
   shall have a liquid-tight continuous external weld in accordance with NFPA 96. The hood shall be wall type with a minimum of four connections for hanger rods. Connectors shall have 9/16" holes pre-punched in 1 ½" x 1 ½" angle iron at the factory to allow for hanger rod connection by others.

   The hood shall be furnished with U.L. classified filters, supplied in size and quantity as required by ventilator.

   The hood manufacturer shall supply complete computer generated submittal drawings including hood sections view(s) and hood plan view(s). These drawings must be available to the engineer, architect and owner for their use in construction, operation and maintenance.

   Exhaust duct collar to be 4" high with 1" flange. Duct sizes, CFM and static pressure requirements shall be as shown on drawings. Static pressure requirements shall be precise and accurate; air velocity and volume information shall be accurate within 1-ft increments along the length of the ventilator.

   U.L. incandescent light fixtures and globes shall be installed and pre-wired to a junction box. The light fixtures shall be installed with a maximum of 4’0" spacing on center and allow up to a 100 watt standard light bulb.

   The hood shall have:
   • A double wall insulated front to eliminate condensation and increase rigidity. The insulation shall have a

flexural modulus of 475 EI, meet UL 181 requirements and be in accordance with NFPA 90A and 90B.
• An integral front baffle to direct grease laden vapors toward the exhaust filter bank.
• A built-in wiring chase provided for outlets and electrical controls on the hood face and shall not penetrate the capture area or require an external chase way.
• Removable grease cup for easy cleaning.
The hood shall be ETL Listed as "Exhaust Hood Without Exhaust Damper", NSF Listed and built in accordance with NFPA 96. The hood shall be listed for 450°F cooking surfaces at 150 CFM/ft, 600°F cooking surfaces at 200 CFM/ft, and 700°F cooking surfaces at 250 CFM/ft. The hood shall be ETL Listed as "Exhaust Hood Without Exhaust Damper".

Optional Features
• Utility Cabinet
• ETL Listed Exhaust Fire Damper
• End Panels
• Enclosure Panels
• Fully Integrated Self Cleaning Options

ITEM #21A FIRE SUPPRESSION SYSTEM

Quantity: One (1)
Manufacturer: Captive-Aire
Model: R-102

Furnish and set in place per manufacturer's standard specifications.

1. System Description
The restaurant fire suppression system is a pre-engineered, wet chemical, cartridge-operated, regulated pressure type with a fixed nozzle agent distribution network. It is listed with Underwriters Laboratories, Inc. (UL/ULC). The system is capable of automatic detection and actuation and/or remote manual actuation. Additional equipment is available for building fire alarm panels connections, electrical shutdown and/or interface, and mechanical or electrical gas line shut-off applications.

The detection portion of the fire suppression system allows for automatic detection by means of specific temperature-rated alloy type fusible links, which separate when the temperature exceeds the rating of the link, allowing the regulated release to
actuate.

A system owner's guide is available containing basic information pertaining to system operation and maintenance. A detailed technical manual including system description, design, installation, recharge, and maintenance procedures is available. The system is installed and serviced by authorized distributors that are trained by the manufacturer.

The basic system consists of an ANSUL AUTOMAN regulated release assembly which includes a regulated release mechanism and a wet chemical storage tank housed within a single enclosure. Nozzles with blow-off caps, detectors, cartridges, agent, fusible links, and pulley elbows are supplied in separate packages in the quantities needed for fire
suppression system arrangements.

Additional equipment includes remote manual pull station, mechanical and electrical gas valves, pressure switches, and electrical switches for automatic equipment and gas line shut-off. Accessories can be added such as alarms, warning lights, etc., to installations where required.

Additional tanks and corresponding equipment can be used in multiple arrangements to allow for larger hazard coverage.

Each tank is limited to a listed maximum amount of flow numbers.

ITEM #21B SUPPLY FAN

Quantity: One (1)
Manufacturer: Captive-Aire
Model: CAPTIVE-AIRE

Furnish and set in place per manufacturer's standard specifications.

1. Supply Fan

ITEM #21C EXHAUST FAN

Quantity: One (1)
Manufacturer: Captive-Aire
Model: CAPTIVE-AIRE

Furnish and set in place per manufacturer's standard specifications.

1. Exhaust Fan

ITEM #21C GAS MANIFOLD

Quantity: One (1)
Manufacturer: Captive-Aire
Model: GM

Furnish and set in place per manufacturer's standard specifications.

1. GAS MANIFOLD

ITEM #21D WALL FLASHING

Quantity: One (1)
Manufacturer: Fabricator
Model: STAINLESS STEEL

Furnish and set in place per manufacturer's standard specifications and the following:

1. Similar to standard detail FD-2.1 Thru FD-2-4. This standard detail is to be utilized as a basic minimum guideline only. Refer to these written specifications and any fabrication details included in the contract drawings for precise and complete fabrication instructions.
2. Cover entire wall behind (and adjacent to) all equipment, from top of coved base to the bottom of ceiling.

ITEM #22 WORK TABLE W/ HAND SINK

Quantity: One (1)
Manufacturer: Fabricator
Model: STAINLESS STEEL

Furnish and set in place per manufacturer's standard specifications and the following:

1. See plans for location and placement of item with reference to adjoining equipment.
2. Similar to standard details FD-1.1A, FD-1.2A, FD-1.4, FD-1.5a, FD-1.8, FD-4.4 and FD-4.5. These standard details are to be utilized as basic minimum guidelines only. Refer to these written specifications and any fabrication details included in the contract drawings for precise and complete fabrication instructions.
3. Provide (1) 14" wide x 14" wide x 10" deep sink bowls as located on plan.

ITEM #22A HANDS FREE ELECTRONIC FAUCET

Quantity: One (1)
Manufacturer: T&S Brass
Model: EC-3100-120X

Furnish and set in place per manufacturer's standard specifications.

1. ChekPoint™ Electronic Faucet, deck mount, 120X rigid gooseneck, vandal resistant aerator, AC/DC control module, mixing valve, 100-240 VAC adapter

ITEM #22B PAPER TOWEL DISPENSER

Quantity: One (1)
Manufacturer: By Vendor
Model: BY VENDOR

Furnish and set in place per manufacturer's standard specifications.

1. PAPER TOWEL DISPENSER

ITEM #22C SOAP DISPENSER

Quantity: One (1)
Manufacturer: By Vendor
Model: BY VENDOR

Furnish and set in place per manufacturer's standard specifications.

1. SOAP DISPENSER

ITEM #22D WASTE BASKET

Quantity: One (1)
Manufacturer: Rubbermaid Commercial Products
Model: FG254300BLA

Furnish and set in place per manufacturer's standard specifications.

1. Waste Basket, 28 quart, 14-1/2"W x 10-1/2"D x 15-5/16"H, fire resistant, rounded corners, textured finish, fiberglass, black, CSFM & UL approved, S.O.S. (Special Order Smallwares) product; see SOS document for details (CAN BREAK CASE - INDICATE ON PO)

ITEM #23 PREP TABLE W/PREP SINKS

Quantity: One (1)
Manufacturer: Fabricator
Model: STAINLESS STEEL

Furnish and set in place per manufacturer's standard specifications and the following:

1. See plans for location and placement of item with reference to adjoining equipment.
2. Similar to standard details FD-1.1A, FD-1.2A, FD-1.4, FD-1.5a, FD-1.8, FD-4.4 and FD-4.5. These standard details are to be utilized as basic minimum guidelines only. Refer to these written specifications and any fabrication details included in the contract drawings for precise and complete fabrication instructions.
3. Provide (2) 24" wide x 24" wide x 15" deep sink bowls as located on plan.
4. Custom Sink Covers

ITEM #23A DECK MOUNT FAUCET

Quantity: One (1)
Manufacturer: T&S Brass
Model: B-0220

Furnish and set in place per manufacturer's standard specifications.

1. Mixing Faucet, deck mount, 18" swing nozzle, 8" centers on deck faucet with 1/2" IPS eccentric flanged female inlets, quarter-turn Eterna cartridges with spring checks, lever handles, low lead, ADA Compliant

ITEM #23B POT RACK TABLE MOUNTED , W/SHELF

Quantity: One (1)
Manufacturer: Fabricator
Model: STAINLESS STEEL

Furnish and set in place per manufacturer's standard specifications and the following:

1. Similar to standard detail FD-1.16. This standard detail is to be utilized as a basic minimum guideline only. Refer to these written specifications and any fabrication details included in the contract drawings for precise and complete fabrication instructions.
2. Install in place as shown on plans using stainless steel fasteners.
3. Length, width and configuration per plan.
4. Verify and coordinate mounting height of shelves with Owner/Operator and equipment located below bottom shelf.
5. Coordinate installation above Item #656, Table.
6. Provide a Chase for the plumbing and drain for the hand sink.

ITEM #23C HOT / COLD FOOD WELL UNIT, DROP-IN, ELECTRIC

Quantity: One (1)
Manufacturer: Low Temp Industries
Model: DI-QSCHP-4

Furnish and set in place per manufacturer's standard specifications and the following:

1. QuickSwitch™ Hot/Cold/Freeze Food Well, drop-in, 64-3/4"W x 26-3/4"D x 21-16/25"H, 14ga stainless steel top, accommodates (4) 12" x 20" pan size, wired remote, individual wired remote digital controls for hot or cold operation, manifold drain, stainless steel top & wells, galvanized exterior, cULus, ANSI/NSF 4, ANSI/NSF 7
2. Some options may increase lead times
3. 120/208v/60/1-ph, 14.4 amps, NEMA 14-20P
4. Hugged edge

ITEM #23D MICROWAVE OVEN

Quantity: One (1)
Manufacturer: Panasonic
Model: NE-1025F

Furnish and set in place per manufacturer's standard specifications and the following:

1. PRO Commercial Microwave Oven, 1000 Watts, 0.8 cu. ft. capacity, 6-minute electronic dial timer with auto-reset, bottom energy feed, shelf, interior light, stainless steel front, 120v/60/1-ph, 13.4 amps, cord, NEMA 5-15P, cULus, NSF
2. 1 year limited warranty

ITEM #24 PLANETARY MIXER

Quantity: One (1)
Manufacturer: Hobart
Model: HL120-1

Furnish and set in place per manufacturer's standard specifications and the following:

1. 100-120/50/60/1; Bench type mixer; without attachments; US/EXP configuration - Legacy Planetary Mixer - Unit Only, Bench, 12 quart, (3) fixed/stir speed, gear-driven transmission, 15-Minute SmartTimer™, #12 taper hub, manual bowl lift, stainless steel bowl guard, 1/2 hp, cord with plug
2. Standard warranty - 1-Year parts, labor & travel time during normal working hours within the USA
3. Legacy® Mixer Bowl, 12 quart, stainless steel

ITEM #25 WORK TABLE

Quantity: One (1)
Manufacturer: Fabricator
Model: STAINLESS STEEL

Furnish and set in place per manufacturer's standard specifications and the following:

1. See plans for location and placement of item with reference to adjoining equipment.
2. Similar to standard details FD-1.1A, FD-1.2A, FD-1.4, FD-1.5a, FD-1.8, FD-4.4 and FD-4.5. These standard details are to be utilized as basic minimum guidelines only. Refer to these written specifications and any fabrication details included in the contract drawings for precise and complete fabrication instructions.

ITEM #25A WALL SHELF

Quantity: One (1)
Manufacturer: Fabricator
Model: STAINLESS STEEL

Furnish and set in place per manufacturer's standard specifications and the following:

1. See plans for location and placement of item with reference to adjoining equipment.
2. Similar to standard detail FD-3.1. This standard detail is to be utilized as a basic minimum guideline only. Refer to these written specifications and any fabrication details included in the contract drawings for precise and complete fabrication instructions.
3. Install in place as shown on plans using stainless steel fasteners.
4. Length, width and configuration per plan.
5. Field verify room dimensions and adjust size as may be required.
6. Verify and coordinate mounting height of shelves with Owner/Operator and equipment located below bottom shelf.
7. All finished edges to be #7 mirrored polish finished.
8. Extra long and L-shaped units to be fully factory welded, no field joints.
9. Provide one (1) wall bracket per every three (3) feet on units over five (5) feet in overall length.
10. NSF listed.

ITEM #25B HANDS FREE ELECTRONIC FAUCET

Quantity: One (1)
Manufacturer: T&S Brass
Model: EC-3100-120X

Furnish and set in place per manufacturer's standard specifications.

1. ChekPoint™ Electronic Faucet, deck mount, 120X rigid gooseneck, vandal resistant aerator, AC/DC control module, mixing valve, 100-240 VAC adapter

ITEM #25C PAPER TOWEL DISPENSER

Quantity: One (1)
Manufacturer: By Vendor
Model: BY VENDOR

Furnish and set in place per manufacturer's standard specifications.

1. PAPER TOWEL DISPENSER

ITEM #25D SOAP DISPENSER

Quantity: One (1)
Manufacturer: By Vendor
Model: BY VENDOR

Furnish and set in place per manufacturer's standard specifications.

1. SOAP DISPENSER

ITEM #25E WASTE BASKET

Quantity: One (1)
Manufacturer: Rubbermaid Commercial Products
Model: FG254300BLA

Furnish and set in place per manufacturer's standard specifications.

1. Waste Basket, 28 quart, 14-1/2"W x 10-1/2"D x 15-5/16"H, fire resistant, rounded corners, textured finish, fiberglass, black, CSFM & UL approved, S.O.S. (Special Order Smallwares) product; see SOS document for details (CAN BREAK CASE - INDICATE ON PO)

ITEM #26 WORK CABINET W/HAND SINK AND PASS-THRU SHELF

Quantity: One (1)
Manufacturer: Fabricator
Model: STAINLESS STEEL

Furnish and set in place per manufacturer's standard specifications and the following:

1. See plans for location and placement of item with reference to adjoining equipment.
2. Similar to standard details FD-1.1A, FD-1.2A, FD-1.4, FD-1.5a, FD-1.8, FD-4.4 and FD-4.5. These standard details are to be utilized as basic minimum guidelines only. Refer to these written specifications and any fabrication details included in the contract drawings for precise and complete fabrication instructions.
3. Provide (1) 14" wide x 14" wide x 10" deep sink bowls as located on plan.
4. Provide (1) Pass-Thru Shelf as located on plan.

ITEM #27 MOBILE HEATED CABINET

Quantity: One (1)
Manufacturer: Hatco
Model: FSHC-7-1

Furnish and set in place per manufacturer's standard specifications and the following:

1. Flav-R-Savor® Holding Cabinet, Mobile Heated, thermostatically-controlled heat, electrical components, water reservoir, insulated, (1) door, digital temperature readout, adjustable humidity & temperature, (7) adjustable removable slides for 18" x 26" or 12" x 20" pans, slides on 1-1/2" centers, large swivel casters with wheel locks, 1697 watts, NSF, CE, cULus, Made in USA
2. NOTE: Sale of this product must comply with Hatco's Minimum Resale Price Policy; consult order acknowledgement for details
3. NOTE: Includes 24/7 parts & service assistance, call 800-558-0607
4. One year on-site parts & labor warranty, plus one additional year parts only warranty on all Flav-R-Savor® metal sheathed air heating elements
5. 120v/60/1-ph, 1697 watts, 14.1 amps, NEMA 5-15P (domestic voltage), standard
6. Silver gray side panels (available at time of purchase only)
7. Silver gray top (available at time of purchase only)
8. Casters, low profile in lieu of standard casters (for 32-3/4" H) (available at time of purchase only)

ITEM #28 CORNER GUARD

Quantity: Two (2)

Manufacturer: Advance Tabco
Model: CG-48

Furnish and set in place per manufacturer's standard specifications.

1. Corner Guard, 48" long x 2" x 2", 16 gauge stainless steel, includes: adhesive tape backing

ITEM #29 AIR CURTAIN

Quantity: One (1)
Manufacturer: Mars Air Systems
Model: LPV272-1UD-OB

Furnish and set in place per manufacturer's standard specifications and the following:

1. LoPro Series 2 Air Curtain, for 72" wide door, unheated, galvanized steel cabinet, obsidian black powder coat finish, (1) 1/6 HP motor, 208/230v/60/1-ph, cETLus
2. 5 year warranty, standard
3. 1 year warranty for all parts (except filters), standard
4. Mechanical switches
5. Door Limit Switch, indoor, plunger/roller type, remote mounted
6. Door Limit Switch, indoor, plunger/roller type, remote mounted, 1 HP max, 250v, 20.0 amps, NEMA 2
7. Brackets
8. Offset mounting brackets

ITEM #30-99 SPARE NO.

END OF SECTION 114000

RJS + ASSOCIATES
INTEGRATED FOOD SERVICE DESIGN

ITEM# 1 - MOP SINK CABINET (1 EA REQ'D)

Advance Tabco 9-OPC-84

Cabinet with Mop Sink, 25-3/16"W x 22-3/4"D x 84"H, mop sink base with drain (bowl 16” x 20” x 12”), left hinged door, (2) mop holders, (1) fixed intermediate shelf, slotted side panels for ventilation, 16/304 series stainless steel sink bowl, 18/304 series stainless steel sink bowl apron, 18/430 series stainless steel cabinet, NSF (right hinged door available on request)

STAINLESS STEEL

SINGLE DOOR MOP SINK CABINET

Item #: _____ **Qty #:** _____
Model #: _____
Project #: _____

Cabinet Includes Floor Mop Sink

FEATURES:

16" x 20" x 12" Sink Bowl with Drain
Slotted Side Panels for Ventilation
Single Left-Hinged Door
Fixed Stainless Steel Utility Shelf
2 Mop Holders (1 on each side)

CONSTRUCTION:

All TIG welded.
Welded areas blended to match adjacent surfaces and to a satin finish.

MATERIAL:

16 gauge type "304" Series Sink Bowl
18 gauge type "304" Series Sink Bowl Apron
9-OPC-84 - 18 gauge type "430" Series Stainless Steel Cabinet
9-OPC-84-300 - 18 gauge type "300" Series Stainless Steel Cabinet

OPTIONS:

SU-27 Door Lock
TA-36D Repair Kit For Door Hinge (Per Hinge)
K-94-SHELF Fixed Mid-shelf for 84" High Cabinets
K-94-BACK Add 430 Stainless Steel Back Panel
K-94-BACK-300 Add 300 Stainless Steel Back Panel
TA-48 12" x 12" Cutout From Back Panel (Requires K-94-BACK or K-94-BACK-300)
K-472 Add 8" O.C. Faucet Holes for Service Faucet (36" Standard A.F.F. To Centerline of Faucet Hole, Unless Otherwise Specified. Requires K-94-BACK or K-94-BACK-300)
K-240 Service Faucet
CAB-R Modify Unit to a Right-Hand Door Swing
Standard Left-Hand Door Swing (If required, specify optional right-hand door swing when ordered)

Model #	Cabinet Material
9-OPC-84	18 Ga., 430 S/S
9-OPC-84-300	18 Ga., 300 S/S

ADVANCE TABCO SMART FABRICATION™ www.advancetabco.com

Customer Service Available To Assist You 1-800-645-3166 8:30 am - 7:00 pm E.S.T.

For Orders & Customer Service:
Email: customer@advancetabco.com or Fax: 631-242-6900

For Smart Fabrication™ Quotes:
Email: smartfab@advancetabco.com or Fax: 631-586-2933

REF-E

DIMENSIONS and SPECIFICATIONS

ALL DIMENSIONS ARE TYPICAL

TOL ± .500”

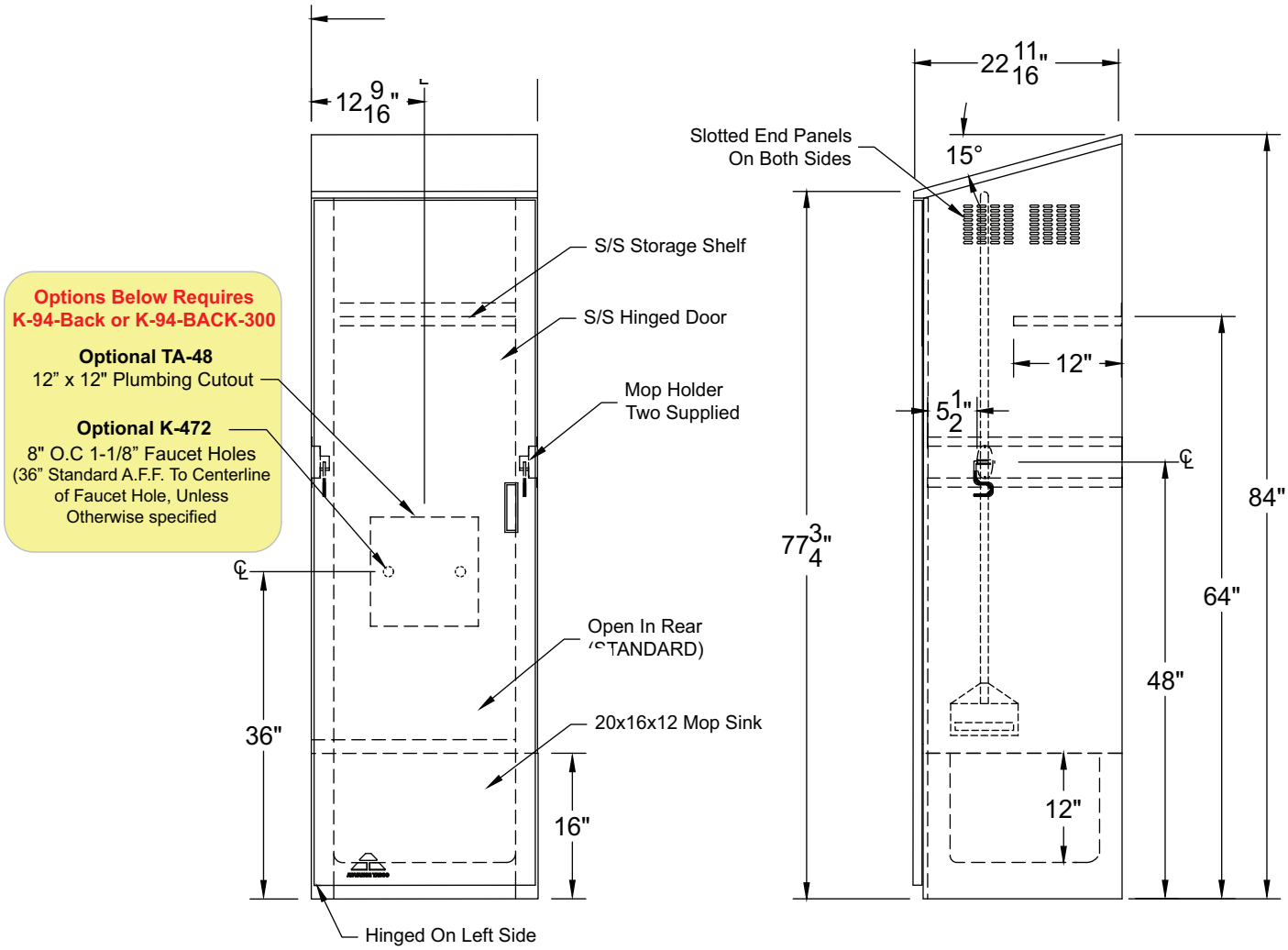

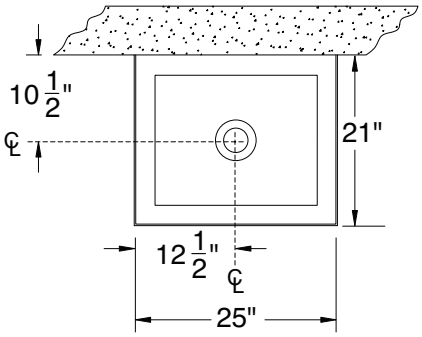

Mop Sink Detail

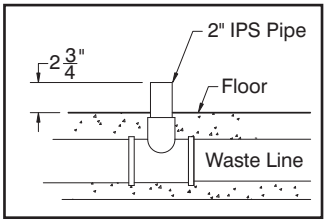

Drain Detail

250 lbs.

ADVANCE TABCO
SMART FABRICATION™

ADVANCE TABCO is constantly engaged in a program of improving our products. Therefore, we reserve the right to change specifications without prior notice.

REF-E 325 Wireless Boulevard, Hauppauge, NY 11788

RJS + ASSOCIATES
INTEGRATED FOOD SERVICE DESIGN

ITEM# 1A - SERVICE FAUCET (1 EA REQ'D)

Advance Tabco K-240

Service Sink Faucet, wall mount, 8" OC, 6-1/2" spout, with hose thread & pail hook, vacuum breaker spout, wall braced, chrome-plated brass

K-240
SERVICE FAUCET FOR MOP SINKS

BACK VIEW
1/2" NPT FEMALE THREAD

Item #: _____ Qty #: _____
Model #: _____
Project #: _____

FEATURES:

8" O.C. water supply.
Quarter turn wedge style handles with colored hot & cold Indexes.
9.6 GPM/36.3 LPM.
Wall support bracket & pail hook.
Vacuum breaker. Built-in stops.
Garden hose outlet.

MATERIAL:

Brass chrome plated body & spout.
Chrome plated handles.

Click This Link To View Assembly Sheet

DIMENSIONS and SPECIFICATIONS

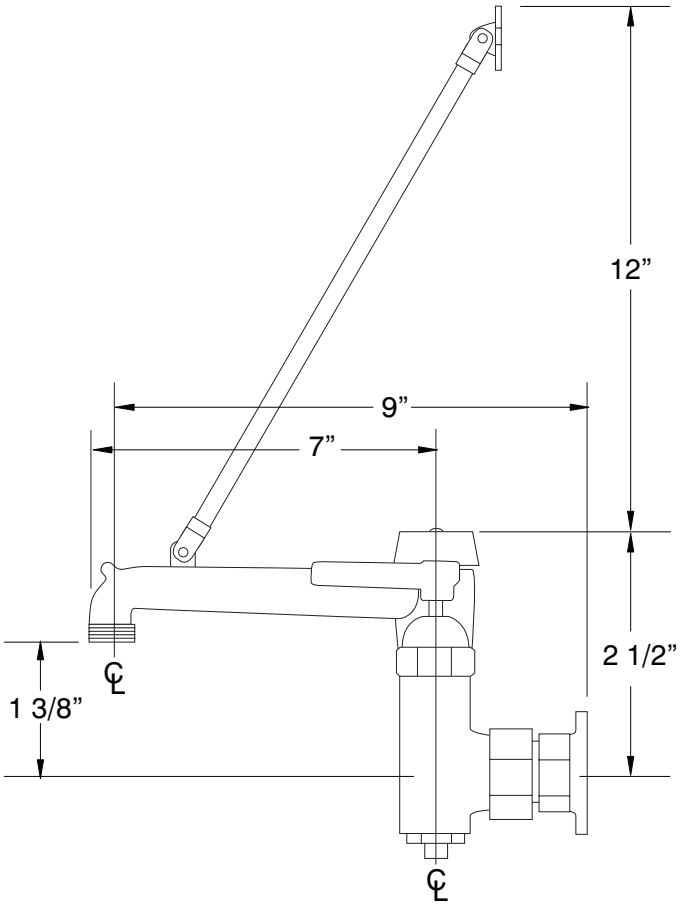

Options & Accessories

Replacement Vacuum Breaker Repair Kit For K-240

K-03

Faucet Repair Kit*
K-00B (Set of 2)
Includes 2 Cartirdges and 2 Handles With Red & Blue Indexes

*Can Only Be Used On Faucets Purchased After January 2016.
For Older Faucets, Consult Customer Service.

⚠ WARNING:
Faucet(s) on this page may expose you to chemicals, including lead, that are known to the State of California to cause cancer or birth defects or other reproductive harm. For more Info.,visit www.p65warnings.ca.gov.

ADVANCE TABCO SMART FABRICATION™
www.advancetabco.com

Customer Service Available To Assist You 1-800-645-3166 8:30 am - 7:00 pm E.S.T.

For Orders & Customer Service:
Email: customer@advancetabco.com or **Fax:** 631-242-6900

For Smart Fabrication™ Quotes:
Email: smartfab@advancetabco.com or **Fax:** 631-586-2933

RJS + ASSOCIATES
INTEGRATED FOOD SERVICE DESIGN

ITEM# 2 - REACH-IN REFRIGERATOR (1 EA REQ'D)

True Mfg. - General Foodservice T-49-HC

Refrigerator, reach-in, two-section, (2) stainless steel doors, (6) PVC coated adjustable wire shelves, interior lighting, stainless steel front, aluminum sides, aluminum interior with stainless steel floor, 4" castors, R290 Hydrocarbon refrigerant, 1/2 HP, 115v/60/1-ph, 5.4 amps, NEMA 5-15P, cULus, UL EPH Classified, Made in USA, ENERGY STAR®

ACCESSORIES

Mfr	Qty	Model	Spec
True Mfg. - General Foodservice	1		Note: Due to the continued supply chain issues in the industry all True pricing is tentative based on final production dates. Any units ordered that will be produced on or after October 1st, 2022 may be subject to additional pricing escalators. Please contact your True representative for final lead times.
True Mfg. - General Foodservice	1		Self-contained refrigeration standard
True Mfg. - General Foodservice	1		Warranty - 7 year compressor (self-contained only), please visit www.Truemfg.com for specifics
True Mfg. - General Foodservice	1		Warranty - 3 year parts and labor, please visit www.Truemfg.com for specifics
True Mfg. - General Foodservice	1		Left door hinged left, right door hinged right standard
True Mfg. - General Foodservice	1		4" stem castors, standard (adds 5" to OA height)

TRUE MANUFACTURING CO., INC.
U.S.A. FOODSERVICE DIVISION
2001 East Terra Lane • O'Fallon, Missouri 63366-4434 • (636)240-2400
Fax (636)272-2408 • Toll Free (800)325-6152 • Intl Fax# (001)636-272-7546
Parts Dept. (800)424-TRUE • Parts Dept. Fax# (636)272-9471 • www.truemfg.com

Project Name: _____
Location: _____
Item #: _____ *Qty:* _____
Model #: _____

AIA #
SIS #

Model:
T-49-HC

T-Series:
Reach-In Solid Swing Door Refrigerator with Hydrocarbon Refrigerant

T-49-HC

- True's solid door reach-in's are designed with enduring quality that protects your long term investment.
- Designed using the highest quality materials and components to provide the user with colder product temperatures, lower utility costs, exceptional food safety and the best value in today's food service marketplace.
- Factory engineered, self-contained, capillary tube system using environmentally friendly R290 hydro carbon refrigerant that has zero (0) ozone depletion potential (ODP), & three (3) global warming potential (GWP).
- High capacity, factory balanced refrigeration system that maintains cabinet temperatures of 33°F to 38°F (.5°C to 3.3°C) for the best in food preservation.
- Adjustable, heavy duty PVC coated shelves.
- Positive seal self-closing doors. Lifetime guaranteed door hinges and torsion type closure system.

Bottom mounted units feature:

- "No stoop" lower shelf.
- Storage on top of cabinet.
- Compressor performs in coolest, most grease free area of kitchen.
- Easily accessible condenser coil for cleaning.

ROUGH-IN DATA

Specifications subject to change without notice.
Chart dimensions rounded up to the nearest ⅛" (millimeters rounded up to next whole number).

Model	Doors	Shelves	Cabinet Dimensions (inches) (mm) W	D	H*	HP	Voltage	Amps	NEMA Config.	Cord Length (total ft.) (total m)	Crated Weight (lbs.) (kg)
T-49-HC	2	6	54⅛ 1375	29½ 750	78⅜ 1991	½ ⅓	115/60/1 230-240/50/1	5.4 2.4	5-15P ▲	9 2.74	450 205

* Height does not include 5" (127 mm) for castors or 6" (153 mm) for optional legs.

▲ Plug type varies by country.

MADE WITH INNOVATION IN THE USA · 5 YEAR COMPRESSOR WARRANTY USA · ENERGY STAR · c UL us · CLASSIFIED UL EPT · natural refrigerant

5/20 Printed in U.S.A.

APPROVALS:

AVAILABLE AT:

Model:
T-49-HC

T-Series:
Reach-In Solid Swing Door Refrigerator with Hydrocarbon Refrigerant

STANDARD FEATURES

DESIGN
- True's commitment to using the highest quality materials and over sized refrigeration systems provides the user with colder product temperatures, lower utility costs, exceptional food safety and the best value in today's food service marketplace.

REFRIGERATION SYSTEM
- Factory engineered, self-contained, capillary tube system using environmentally friendly R290 hydro carbon refrigerant that has zero (0) ozone depletion potential (ODP), & three (3) global warming potential (GWP).
- High capacity, factory balanced refrigeration system that maintains cabinet temperatures of 33°F to 38°F (.5°C to 3.3°C) for the best in food preservation.
- State of the art, electronically commutated evaporator and condenser fan motors. ECM motors operate at higher peak efficiencies and move a more consistent volume of air which produces less heat, reduces energy consumption and provides greater motor reliability.
- Bottom mounted condensing unit positioned for easy maintenance. Compressor runs in coolest and most grease free area of the kitchen. Allows for storage area on top of unit.

CABINET CONSTRUCTION
- Exterior - Stainless steel front. Anodized quality aluminum ends. Corrosion resistant GalFan coated steel back.
- Interior - attractive, NSF approved, clear coated aluminum liner. Stainless steel floor with coved corners.
- Insulation - entire cabinet structure and solid door are foamed-in-place using a high density, polyurethane insulation that has zero ozone depletion potential (ODP) and zero global warming potential (GWP).
- Welded, heavy duty steel frame rail, black powder coated for corrosion protection.
- Frame rail fitted with 4" (102 mm) diameter stem castors - locks provided on front set.

DOORS
- Stainless steel exterior with clear aluminum liner to match cabinet interior. Doors extend full width of cabinet shell. Door locks standard.
- Lifetime guaranteed recessed door handles. Each door fitted with 12" (305 mm) long recessed handle that is foamed-in-place with a sheet metal interlock to ensure permanent attachment.
- Positive seal self-closing doors. Lifetime guaranteed door hinges and torsion type closure system.
- Magnetic door gaskets of one piece construction, removable without tools for ease of cleaning.

SHELVING
- Six (6) adjustable, heavy duty PVC coated wire shelves 24 9/16"L x 22 3/8"D (624 mm x 569 mm). Four (4) chrome plated shelf clips included per shelf.
- Shelf support pilasters made of same material as cabinet interior; shelves are adjustable on ½" (13 mm) increments.

LIGHTING
- LED Interior lighting - safety shielded. Lights activated by rocker switch mounted above doors.

MODEL FEATURES
- Exterior temperature display.
- Evaporator is epoxy coated to eliminate the potential of corrosion.
- NSF/ANSI Standard 7 compliant for open food product.

ELECTRICAL
- Unit completely pre-wired at factory and ready for final connection to a 115/60/1 phase, 15 amp dedicated outlet. Cord and plug set included.

115/60/1
NEMA-5-15R

OPTIONAL FEATURES/ACCESSORIES
Upcharge and lead times may apply.
- ❑ 230 - 240V / 50 Hz.
- ❑ 6" (153 mm) standard legs.
- ❑ 6" (153 mm) seismic/flanged legs.
- ❑ 2½" (64 mm) standard legs.
- ❑ Alternate door hinging (factory installed).
- ❑ Half door bun tray racks. Each holds up to eleven 18"L x 26"D (458 mm x 661 mm) sheet pans (sold separately).
- ❑ Full door bun tray racks. Each holds up to twenty-two 18"L x 26"D (458 mm x 661 mm) sheet pans (sold separately).

PLAN VIEW

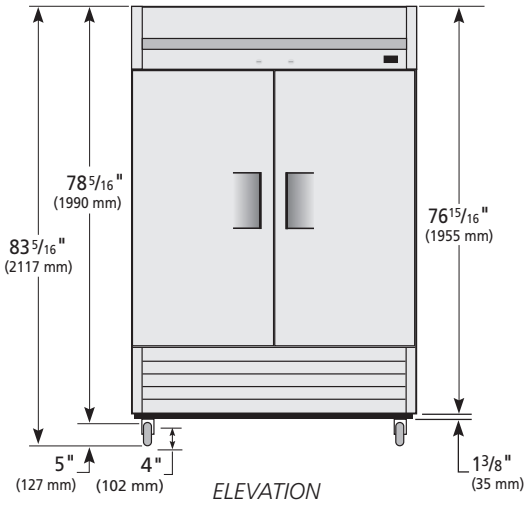

ELEVATION

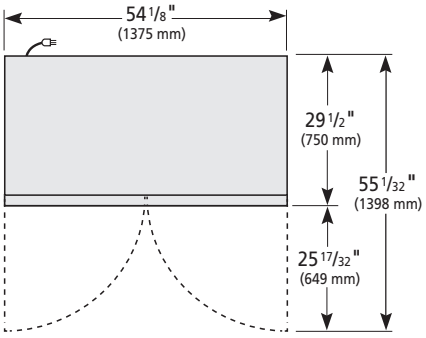

PLAN VIEW

3 YEAR PARTS + LABOR
7 YEAR COMPRESSOR
WARRANTY
(U.S.A. only)

METRIC DIMENSIONS ROUNDED UP TO THE NEAREST WHOLE MILLIMETER

SPECIFICATIONS SUBJECT TO CHANGE WITHOUT NOTICE

Model	Elevation	Right	Plan	3D	Back
T-49-HC					

TRUE MANUFACTURING CO., INC.
2001 East Terra Lane • O'Fallon, Missouri 63366-4434 • (636)240-2400 • Fax (636)272-2408 • Toll Free (800)325-6152 • Intl. Fax# (001)636-272-7546 • www.truemfg.com

RJS + ASSOCIATES
INTEGRATED FOOD SERVICE DESIGN

ITEM# 3 - WIRE SHELVING UNIT (3 EA REQ'D)

Metro EZ2436NK3-4

Super Erecta® Convenience Pak Shelving Unit, 36"W x 24"D x 74"H, (4) wire shelves with clips & (4) split posts with adjustable feet, Metroseal 3™ finish, KD, NSF

Item # _____

Job _____

SUPER ERECTA SHELF® Convenience Pak Shelving

SUPER ERECTA SHELF®

CONVENIENCE PAK SHELVING

Shelving Sales Made Easy

Metro's Convenience Pak Super Erecta Shelf® Shelving provides a complete shelving unit in a single box. Convenience Pak shelving is easier to promote, select, and order as compared to separate shelving components. Convenience Pak will increase your overall sales volume, improve operating efficiencies and reduce your handling and inventory costs.

- **Single Package Design:** Convenience Pak Super Erecta Shelving is packaged in one box. Each post comes in 2 modules with a heavy-duty connector provided to connect post halves. Post modules, connectors, shelves, and split sleeve connector are all included in 1 box.
- **Simplified Sales and Ordering:** Each given size Convenience Pak unit has its own catalog number and list price, making Convenience Pak the easiest shelving product to select, price, and order. With ease and efficiency your sales people can respond to your customers' basic shelving needs, increasing their sales volume per sales call.
- **Easy to Inventory:** The single package Convenience Pak makes it easy for you to inventory much of your shelving requirements, reducing the inventory space for posts and shelves.
- **Simplified Shipping and Handling:** Basic shelving orders can be handled with one trip to the warehouse, requiring only one box be handled rather than separate shelves, posts, and split sleeves. Common mistakes made in consolidating components for a given job will be dramatically reduced resulting in an overall improvement in your operating efficiencies. Simplified ordering and invoicing will reduce the work load on your in-house personnel, reducing your overall costs.
- **As Strong and Durable as Standard Super Erecta Shelf Shelving:** Post modules and heavy-duty connector provide a shelving unit equal to the superior load bearing and durability recognized in our traditional Super Erecta Shelving design. Whether the application is stationary or mobile, the Convenience Pak unit meets the tough performance guidelines established by Super Erecta Shelving.
- **Three Finishes:** Convenience Pak units are available in Super Erecta Brite,™ Chrome, and Metroseal 3™ finishes, to handle any shelving applications your customers may have.

- **Increase sales productivity**
- **Improve operating efficiency**
- **Reduce costs**

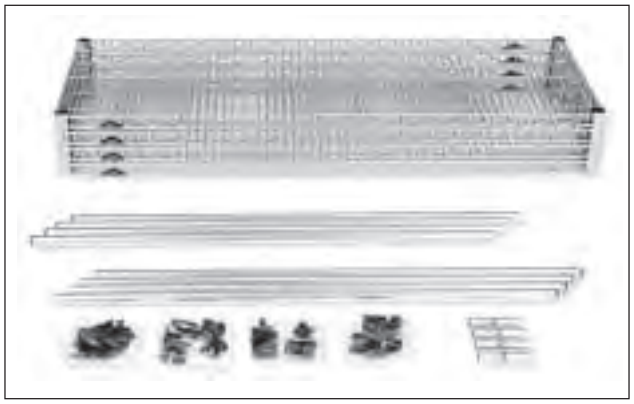

NSF

U.S. and Foreign Patents Pending

InterMetro Industries Corporation
North Washington Street
Wilkes-Barre, PA 18705
www.metro.com

EMERSON Storage Solutions

10.03

Job _____

SUPER ERECTA SHELF®

CONVENIENCE PAK SHELVING

Three Finishes Available:

- **Super Erecta Brite™:** Applicable to dry storage applications, where moisture and humidity are not a concern.
- **Chrome:** Designed for dry storage applications where added durability, cleanability, or a more aesthetic appearance might be required.
- **Metroseal 3** is manufactured using the latest state-of-the-art plating and coating processes. It incorporates a durable electro-plated metal base layer. This substrate, when coated with Metro's new proprietary epoxy coating will provide years of corrosion free service. For more information on Metroseal 3, refer to sheet #10.10a.

Cat. No.	Width (in.)	Width (mm)	Length (in.)	Length (mm)	Height (in.)	Height (mm)	Approx, Pkd. Wt. (lbs.)	Approx, Pkd. Wt. (kg)
Four (4) Super Erecta Brite™ Shelves per Unit								
EZ1836BR-4	18	455	36	910	74.5	1890	51	23
EZ1848BR-4	18	455	48	1220	74.5	1890	63	28
EZ1860BR-4	18	455	60	1525	74.5	1890	82	37
EZ2436BR-4	24	610	36	910	74.5	1890	66	30
EZ2448BR-4	24	610	48	1220	74.5	1890	76	34
EZ2460BR-4	24	610	60	1525	74.5	1890	102	46
Four (4) Chrome Shelves per Unit								
EZ1836NC-4	18	455	36	910	74.5	1890	51	23
EZ1848NC-4	18	455	48	1220	74.5	1890	63	28
EZ1860NC-4	18	455	60	1525	74.5	1890	82	37
EZ2436NC-4	24	610	36	910	74.5	1890	66	30
EZ2448NC-4	24	610	48	1220	74.5	1890	76	34
EZ2460NC-4	24	610	60	1525	74.5	1890	102	46
Four (4) Metroseal 3™ Shelves per Unit								
EZ1836NK3-4	18	455	36	910	74.5	1890	51	23
EZ1848NK3-4	18	455	48	1220	74.5	1890	63	28
EZ1860NK3-4	18	455	60	1525	74.5	1890	82	37
EZ2436NK3-4	24	610	36	910	74.5	1890	66	30
EZ2448NK3-4	24	610	48	1220	74.5	1890	76	34
EZ2460NK3-4	24	610	60	1525	74.5	1890	102	46

All Metro Catalog Sheets are available on our Web Site: **www.metro.com**

InterMetro Industries Corporation
North Washington Street, Wilkes-Barre, PA 18705
Phone: 570-825-2741 • Fax: 570-825-2852
For Product Information Call: 1-800-433-2232

L02-007B
Printed in U.S.A. Rev. 2/03

RJS + ASSOCIATES
INTEGRATED FOOD SERVICE DESIGN

ITEM# 4 - SPARE NO.

<Spare No.>

RJS + ASSOCIATES
INTEGRATED FOOD SERVICE DESIGN

ITEM# 5 - CORNER SINK (1 EA REQ'D)

Advance Tabco 94-K2-24D

Corner Sink, 3-compartment, (3) 20" x 20" x 12" deep bowls, with 24" left & right-hand drainboards, with 8"H backsplash, stainless steel open frame base, side crossrails, adjustable stainless steel bullet feet, 16 gauge 304 stainless steel, 71" x 71" overall, NSF (requires 2 faucets)

ACCESSORIES

Mfr	Qty	Model	Spec
Advance Tabco	3	K-15	Lever Waste Drain, twist handle operated with built in overflow, fits 3-1/2" drain opening, 2" NPT & 1-1/2" IPS outlet connections
Advance Tabco	3	K-4	Support Bracket, for lever waste drain handle, (1) support required for each lever drain
Advance Tabco	1		Modify Drainboard to fit Dishwasher.

ADVANCE TABCO
SMART FABRICATION™

STAINLESS STEEL

REGALINE CORNER SINKS

NSF

FEATURING A
TILE EDGE DESIGN

Item #: _____ Qty #: _____
Model #: _____
Project #: _____

Includes Adjustable Side Cross-Bracing

Recessed Bowl Surface Accommodates Poly-Vance Cutting Boards & Sink Covers

All units furnished with 2 integral drainboards

FEATURES:

Tile edge for ease of installation.

One piece **Deep Drawn** sink bowls with integral drainboards with splash.

Featuring the single bowl unit design.

All sink bowls have a large liberal 3" radius (10"x14" bowls have 2" Radius).

Corner sinks are supplied with adjustable side cross braces featuring leg clamps.

CONSTRUCTION:

All TIG welded.

Welded areas blended to match adjacent surfaces and to a satin finish.

Gussets welded to a die-embossed reinforcing channel.

MATERIAL:

Unit is 16 gauge, type "304" stainless steel.

Legs are 1 5/8" diameter heavy gauge tubular stainless steel with stainless steel gussets.

1" adjustable stainless steel bullet feet.

MECHANICAL:

- Supply is 1/2" IPS hot & cold.
- Faucet holes on 8" centers.
- Faucets are not included **(see accessories)**.
- Waste drains are 1 1/2" IPS S/S basket type, located in center of sink bowl, and are included.

MODEL #	# of Comp.	Wall Dimension	Optional Poly-Vance Cutting Board
94-K2-24D	3	71 1/2" x 71 1/2""	K-2E
94-K4-24D	3	79 1/2" x 79 1/2"	K-2F
94-K6-18D	3	61 1/2" x 61 1/2"	K-2E
94-K8-30D	3	85 1/2" x 85 1/2"	K-2E
94-K3-11D	3	54 1/2" x 54 1/2"	K-2H
94-K5-11D	3	42 1/2" x 42 1/2"	K-2H

YES! It's SeaMLess!

ACCESSORIES	Model #	Qty
FAUCETS		

All Units Require 2 Sets of Faucets

ADVANCE TABCO
SMART FABRICATION™
www.advancetabco.com

Customer Service Available To Assist You 1-800-645-3166 8:30 am - 7:00 pm E.S.T.

For Orders & Customer Service:
Email: customer@advancetabco.com or **Fax:** 631-242-6900

For Smart Fabrication™ Quotes:
Email: smartfab@advancetabco.com or **Fax:** 631-586-2933

DIMENSIONS and SPECIFICATIONS

TOL Overall: ± .500”
Interior: ± .250”

ALL DIMENSIONS ARE TYPICAL

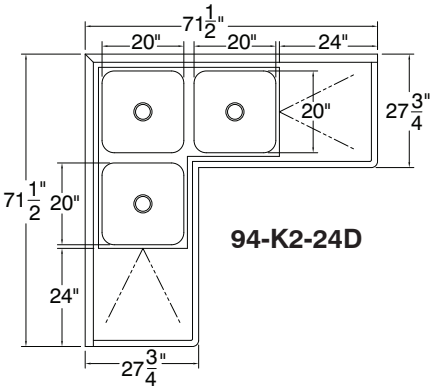

94-K2-24D

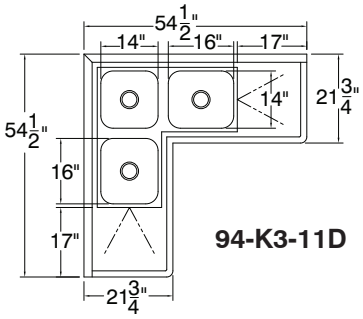

94-K3-11D

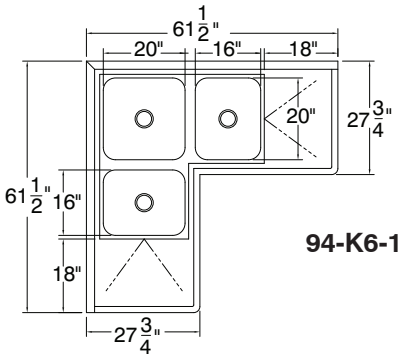

94-K6-18D

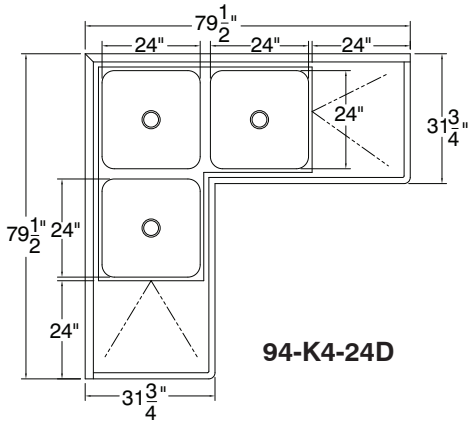

94-K4-24D

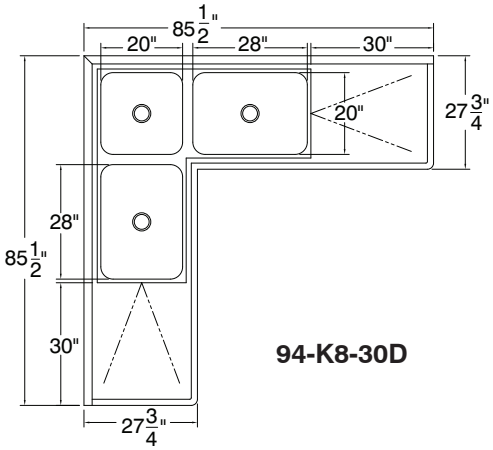

94-K8-30D

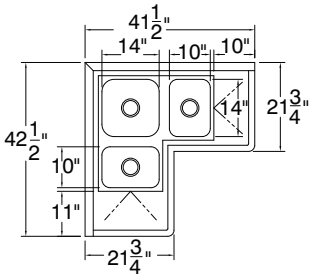

94-K5-11D

PLUMBING ROUGH-IN

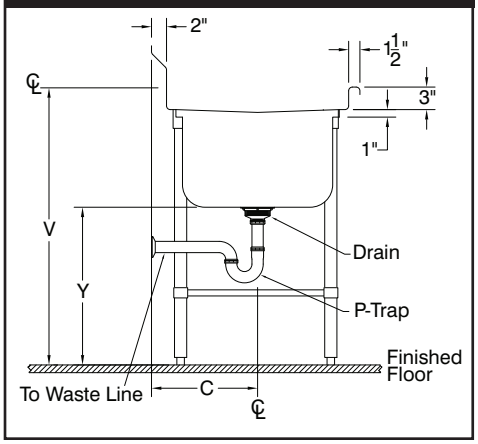

SECTION

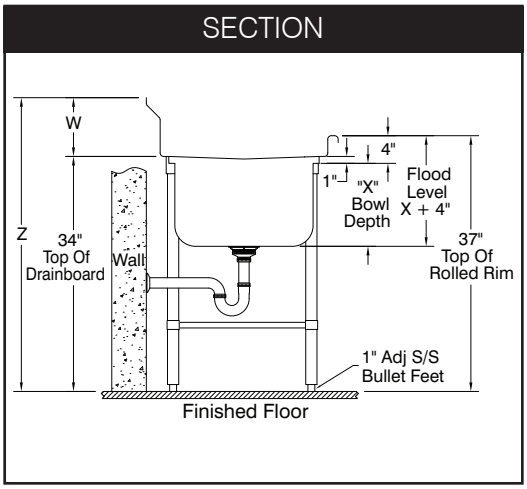

Model #	V	W	X	Y	Z
94-K2-24D	38”	8”	12”	21”	45”
94-K4-24D	38”	8”	12”	21”	45”
94-K6-18D	38”	8”	12”	21”	45”
94-K8-30D	38”	8”	12”	21”	45”
94-K3-11D	38”	8”	12”	21”	45”
94-K5-11D	38”	8”	10”	23”	45”

ADVANCE TABCO
SMART FABRICATION
325 Wireless Boulevard, Hauppauge, NY 11788

ADVANCE TABCO is constantly engaged in a program of improving our products. Therefore, we reserve the right to change specifications without prior notice.

DISHTABLE MODS

Dishtable Modifications & Accessories

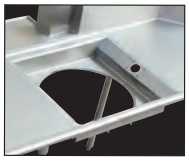

DTA-95

DTA-87

DTA-82

DTA-45

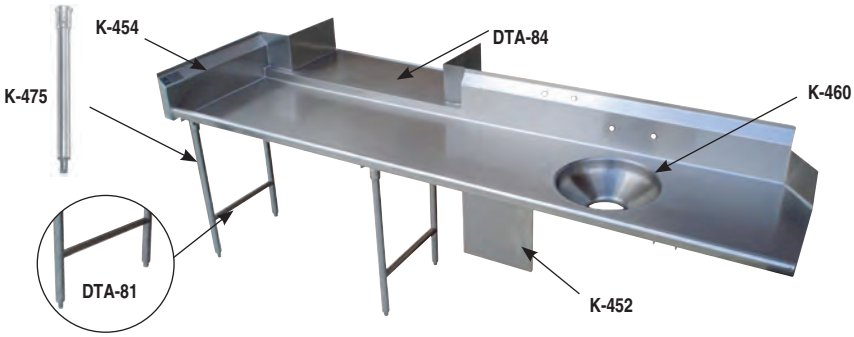

MODIFICATIONS

K-23	Welded Set-Up/Crated
K-24	Shell Crating
K-37	Anti-Siphon Vacuum Breaker Hole
K-57	Welded Field Joint (Welded In Field By Others)
K-76	Paint On Sound Deadening
K-77	Splash Cut-Out (Pipe Chase)
K-440	Waste Trough Installation Welded Into Table And Furnished With A 2" Deep Removable Basket
K-452	Control Bracket 8" x 12"
K-453	Control Bracket 14" x 16"
K-454	Side Splash
K-456	Scrap Block Installed (Includes Rubber Scrap Block)
K-460	Disposal Cone Welded Into Table And Furnished With 8" x 12" Control Bracket & Faucet Holes (Supplied By Others)
K-460A	Installation Of Disposal Cone With 14" x 16" Control Bracket, Faucet Holes (Cone Supplied By Others)
K-461	Disposal Collar Welded Into Sink Bowl And Furnished With 8" x 12" Control Bracket (Supplied By Others)
K-461A	Disposal Collar Welded Into Sink Bowl And Furnished With 14" x 16" Control Bracket (Supplied By Others)
K-472	Special Faucet Hole Location
K-495	Turn Down Backsplash (Incl. 2 Brackets. See K-397 For Addt'l Sets)
K-508A	Special Modification Charge
K-550	Stainless Steel Tubular Rack Storage
DTA-40	Drain Hole (For Sorting Table)
DTA-45	Scrap Trough Welded To Dump Sink - Min. Scrap Trough Length Is 3'. Max. Length Is 8'. For 20" x 20" x 8" Bowl Spec-Line Soil S30 Series Only. - Consult Factory For Trough Lengths Exceeding 8 Feet
DTA-46	Inside Mitered Corner
DTA-66	Provision For Dishlanding On Straight Soil Table (Min 4')
DTA-70	Install Booster Heater Brackets (Brackets By Others)
DTA-72	Provision For Side Loader
DTA-75	Provision For Limit Switch (Limit Switch By Others)
DTA-76	Move Prerinse Sink To Conform To Dishmachine Requirements. Please Specify Machine When Placing Order
DTA-78	Notch In Backsplash Return To Clear Handle Please Specify Machine When Placing Order
DTA-81	S/S Welded Leg Assembly with S/S Feet
DTA-82	15" x 20" x 8" Undercounter Dump Sink
DTA-84	Simple Pass-Thru (Specify Wall Thickness - Min. Length 36")
DTA-87	Pass-Thru Wall Frame (Specify Wall Thickness - Min. Length 36")
DTA-95	Install Scrapper Top
DTA-96	Install Trough Collector
DTA-99A	16" x 20" x 12" Sink Bowls
DTA-99B	20" x 20" x 12" Sink Bowls
DTA-99C	10" x 14" x 5" Dump Sink
DTA-99D	18" x 24" x 14" Sink
DTA-99E	24" x 24" x 14" Sink
DTA-106	Mirror Highlight To Dishtable Upgrade

ACCESSORIES

K-4	Lever Drain Bracket
K-5	Twist Handle Operated Drain
K-15	Twist Handle Operated Drain With Overflow
K-397	Wall Brackets (2 Each. Brackets Included With K-495)
K-455C	Stainless Steel Sink Cover 16" x 20"
K-455E	Stainless Steel Sink Cover 20" x 20"
K-457	Replacement Rubber Scrap Block (See K-456 For Install Cost)
K-475	Replacement S/S Leg With Stainless Steel Bullet Foot
K-478	Replacement Stainless Steel Bullet Foot
K-488	Flanged S/S Bullet Foot
K-550	Stainless Steel Tubular Rack Storage
K-610	Perforated Stainless Steel Sink Grid (Specify Bowl Size)
K-700D	12" High Removable Side Splash For Dishtables (Specify Model)
DTA-53	SPEC-LINE Heavy Duty Prerinse Faucet
DTA-51	Pre-Rinse Slide Bar for 18" x 24" Fab. Sink Bowls
DTA-52	Pre-Rinse Slide Bar for 24" x 24" Fab. Sink Bowls
DTA-55	Column Notch (Includes Splash)
DTA-56	Addt'l Length On 59" Side Of Corner Or Straight Tables
DTA-58	Pre-Rinse Basket w/ Slide Bar for 18" x 24" Fab. Sink Bowls
DTA-59	Pre-Rinse Basket w/ Slide Bar for 24" x 24" Fab. Sink Bowls
DTA-60	Prerinse Slide Bar for 20" x 20" Fab. Sink Bowls
DTA-62	Prerinse Basket For 20" x 20" Deep Drawn Bowls
DTA-63	Prerinse Slide Bar For 20" x 20" Deep Drawn Bowls
DTA-64	Prerinse Slide Bar For 16" x 20" Fab. Sink Bowls
DTA-65	Prerinse Slide Bar For 16" x 20" Deep Drawn Bowls
DTA-67	Stainless Steel Rear Cross-Bracing (Factory Installed Only)
DTA-69	Prerinse Basket For 16" x 20" Deep Drawn Bowls
DTA-100	Prerinse Basket with Slide Bar for 20" x 20" Fab. Sink Bowls
DTA-125	Prerinse Basket with Slide Bar for 16" x 20" Fab. Sink Bowls
DTA-125A	Perforated Basket for DTA-82 Dump Sink

ADVANCE TABCO®
SMART FABRICATION™

ADDITIONAL DISHTABLE ACCESSORIES

For More Faucet Options & Faucet Specs,
See Faucet Specifications

⚠ WARNING:
Faucet(s) on this page may expose you to chemicals, including lead, that are known to the State of California to cause cancer or birth defects or other reproductive harm. For more Info.,visit www.p65warnings.ca.gov.

Prerinse Baskets with Welded Slide Bar For Fabricated Bowls

Model #	Fits Bowls	Wt.	Cu.
DTA-125	16" x 20" x 4"	9 lbs.	1
DTA-100	20" x 20" x 4"	12 lbs.	1
Large Size Baskets			
DTA-58	18" x 24" x 4"	11 lbs.	1
DTA-59	24" x 24" x 4"	20 lbs.	1

DTA-100 Shown

Prerinse Baskets with Welded Slide Bar For Deep Drawn Bowls

Model #	Fits Bowls	Wt.	Cu.
DTA-69	16" x 20" x 4"	9 lbs.	1
DTA-62	20" x 20" x 4"	12 lbs.	1

DTA-62 Shown

Prerinse Slide Bars For Fabricated Bowls

Model #	Fits Bowls	Wt.	Cu.
DTA-64	16" x 20"	7 lbs.	1
DTA-60	20" x 20"	9 lbs.	1
Large Size Prerinse Slide Bars			
DTA-51	18" x 24"	8 lbs.	1
DTA-52	24" x 24"	10 lbs.	1

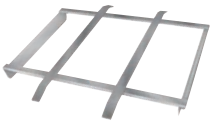

Prerinse Slide Bars for Deep Drawn Bowls

Model #	Fits Bowls	Wt.	Cu.
DTA-65	16" x 20"	7 lbs.	1
DTA-63	20" x 20"	9 lbs.	1

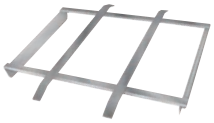

Splash Mounted Faucet
EXTRA HEAVY DUTY

K-119
8" O.C.

16" Spout

Splash Mounted Faucet

K-101
8" O.C.

8" Spout

SPEC-LINE EXTRA HEAVY DUTY

Prerinse Faucet

DTA-53
8"O.C.

Wall Bracket Included

Splash Mounted

Interchangeable with T&S Brand Faucets T&S Equivalent = B133-B

Prerinse Faucet

T&S

K-116
8"O.C.

Wall Bracket Included

Splash Mtd.

Add-A-Faucet for DTA-53 Prerinse Faucet
K-117

Add-A-Faucet for K-116 Prerinse Faucet
K-117-TS

Stainless Steel Sink Compartment Covers

K-455
16" x 20" Cover
or
20" x 20"
Specify Size

Lever Operated Drain

K-5

Twist Handle 2" IPS

Lever Drain Support Bracket

K-4

INDIVIDUAL Stainless Steel Legs with Stainless Steel Adjustable Bullet Feet

K-475

ADVANCE TABCO®
SMART FABRICATION™
www.advancetabco.com

Customer Service Available To Assist You 1-800-645-3166 8:30 am - 8:00 pm E.S.T.
Email Orders To: customer@advancetabco.com. For Smart Fabrication™ Quotes, Email To: smartfab@advancetabco.com or Fax To: 631-586-2933

NEW YORK	GEORGIA	TEXAS	NEVADA
Fax: (631) 242-6900	Fax: (770) 775-5625	Fax: (972) 932-4795	Fax: (775) 972-1578

 REF-9

SINK MODIFICATIONS & ACCESSORIES NSF

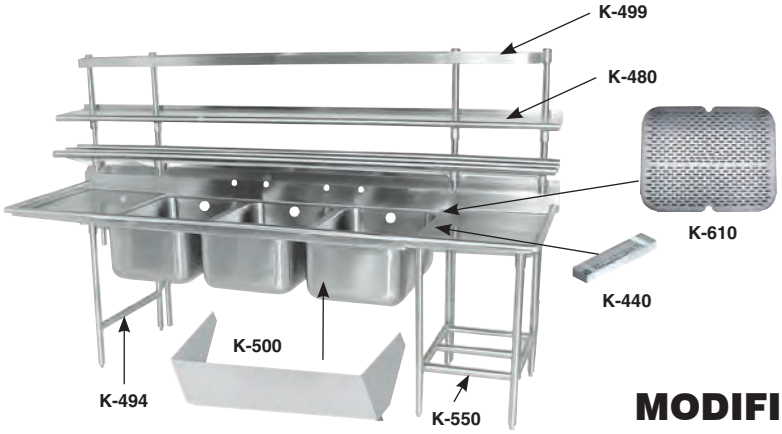

K-37
Anti-Siphon Vacuum Braker Holes

K-72
Leg-To-Wall Brace

K-460A
Disposal Cone w/ Control Bracket & Faucet Holes

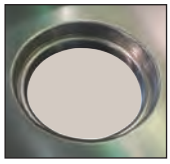

K-461A
Install Collar w/ Control Bracket

MODIFICATIONS

K-4	Support Bracket for Lever Waste Drain Handle
K-23	Sink Legs Welded To Undershelf Or Left-To-Right Cross Rails, Shipped Set Up & Crated. (Top Is Not Welded To Legs)
K-23A	Sink Legs Welded To Leg Gussets Under Sink Top & To Undershelf Or Left-To-Right Cross Rails, Shipped Set Up & Crated
K-24	Shell Crating
K-37	Anti-Siphon Vacuum Breaker Holes
K-57	Welded field Joint *(Welded in field by others)*
K-76	Paint on Sound Deadening
K-77	Splash Cutout (Pipe Chase)
K-106	Mirror Highlite Edge for Sink
K-440	Waste Trough with 2" deep removable basket
K-447	High Backsplash up to 18"
K-448	High Backsplash up to 13"
K-450	Extra Drainboard
K-451	Drainboard Corner Turn
K-452	Control Bracket 8" x 12"
K-452S	Splash Mounted Control Bracket 8" x 12"
K-453	Control Bracket 14" x 16"
K-453S	Splash Mounted Control Bracket 14" x 16"
K-454	Sidesplash
K-456	Scrap Block Installed
K-460	Installation of Disposal Cone with 8" x 12" Control Bracket, Faucet Holes *(Cone supplied by others)*
K-460A	Installation of Disposal Cone with 14" x 16" Control Bracket, Faucet Holes *(Cone supplied by others)*

K-461	Install Collar with 8" x 12" control bracket *(Collar by others)*
K-461A	Install Collar with 14" x 16" control bracket *(Collar by others)*
K-470	Modify Bowl Depth
K-472	Faucet Hole Revision
K-473	Working Height Revision
K-476	Punch for Over Flow Holes *(Holes Only. N/C when ordering K-15)*
K-479	Undershelf Under Drainboard
K-480	Stainless Steel 12" Wide Shelf *(min. of 3 ft.)*
K-480A	Stainless Steel 15" Wide Shelf *(min. of 3 ft.)*
K-490	Provision for Pot Washer *(For "Wells-PW-106" only)*
K-491	Provision for Hatco Heater
K-495	Turn Down Backsplash *(Includes 2 Brackets. See K-397 Addt'l Sets)*
K-498	Tubular Overshelf 12" wide (Min. 3 Ft.)
K-499	Stainless Steel Pot Rack
K-500	Stainless Steel Apron to Cover Sink Bowls
K-500A	17" Stainless Steel Apron to Cover Sink Bowls and Support Lever Drain Handles
K-508	Special Sizing Charge (Larger size cut down to smaller size
K-508A	Special Modification Charge
K-510	Prepare Sink for Undercounter Dishwasher *(24" drainboard or larger)*
K-520	Poly Board/Stainless Steel Cover Holder
K-550	Stainless Steel Tubular Rack Storage
K-ROD	Weld Support Rods For Poly Sink Cover In Corners Of Sink Bowl

ACCESSORIES

K-30	Faucet Wall Mounting Bracket
K-72	Leg To Wall Brace
K-350	Residential Finish & Packaging
K-397	Wall Brackets for Sink *(Brackets Included with K-495)*
K-457	Replacement Rubber Scrap Block *(See K-456 for install cost)*
K-474	16 ga., '304' Series S/S Leg with S/S Foot
K-475	S/S Legs with S/S Foot
K-477	Replacement Leg Clamp For Adjustable Cross-Bracing
K-477C	Replacement Corner Leg Clamp For Adjustable Cross-Bracing
K-478	Stainless Steel Bullet Foot
K-488	Flanged S/S Bullet Foot
K-493	16 ga., '304' Series S/S Welded Leg Assembly with S/S Feet
K-494	S/S Welded Leg Assembly with S/S Feet
K-497	Galv. Welded Leg Assembly with Plastic Feet
K-497A	Galv. Individual Legs with Plastic Feet
K-496	Leg Assembly For Grease Interceptor w/ Adj. Cross-Bracing & S/S Feet *(For Grease Interceptors with 15" Ht. or less. Consult factory for larger Grease Interceptors)*
K-610	Perforated Stainless Steel Sink Grid *(Specify Bowl Size)*

SINK COVERS

Choose Model # & Add The Proper Letter In Place Of The Underscore (_).
Example: K-2A or FC-455H

	FOR DEEP DRAWN BOWLS		FOR FABRICATED BOWLS	
Bowl Size	**Poly Covers Model K-2_**	**S/S Covers Model K-455_**	**Poly Covers Model K-2_**	**S/S Covers Model FC-455_**
10" x 14"	A	A	AF	A
12" x 20"	I	I	IF	I
14" x 14"	H	H	HF	H
14" x 16"	B	B	BF	B
15" x 15"	Not Available	Not Available	MF	M
15" x 24"	Not Available	Not Available	UF	U
16" x 20"	C	C	CF	C
18" x 18"	Not Available	Not Available	JF	J
18" x 24"	D	D	DF	D
20" x 20"	E	E	EF	E
20" x 24"	Not Available	Not Available	PF	P
20" x 28"	G	G	GF	G
20" x 30"	Not Available	Not Available	SF	S
24" x 30"	Not Available	Not Available	TF	T
24" x 24"	F	F	FF	F
24" x 36"	Not Available	Not Available	RF	R
30" x 30"	Not Available	Not Available	VF	V

Custom Covers Available. Consult Factory.

ADVANCE TABCO SMART FABRICATION™
www.advancetabco.com

Customer Service Available To Assist You 1-800-645-3166 8:30 am - 7:00 pm E.S.T.

For Orders & Customer Service:
Email: customer@advancetabco.com or **Fax:** 631-242-6900

For Smart Fabrication™ Quotes:
Email: smartfab@advancetabco.com or **Fax:** 631-586-2933

POT RACK & TUBULAR OVERSHELF DETAILS AND SPECIFICATIONS

ADJUSTABLE POT RACK & SHELF

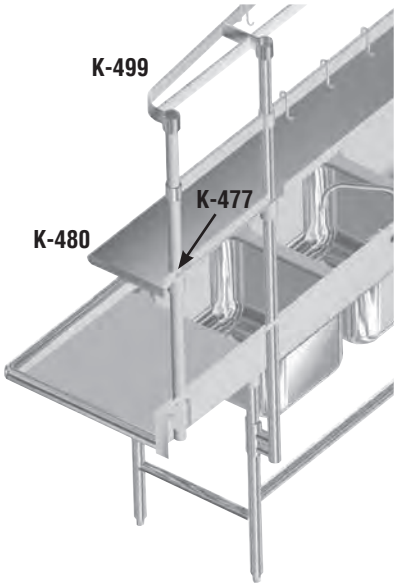

Item #: _____ Qty #: _____
Model #: _____
Project #: _____

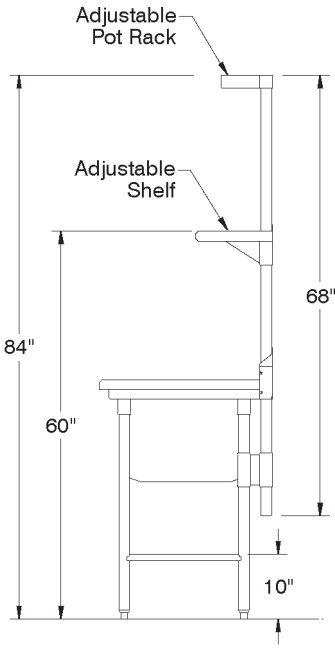

TUBULAR OVERSHELF

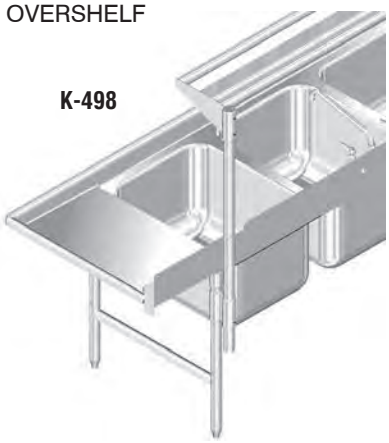

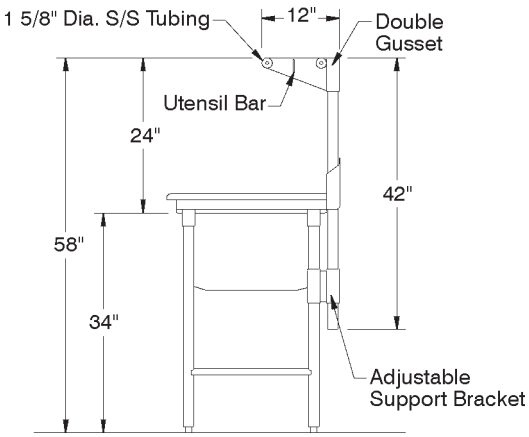

Model #	Description	Qty
K-477	Mounting Provision for Sink Mounted Pot Rack or Shelf	
K-480	12" Wide Stainless Steel Shelf	
K-498	Tubular Overshelf (min. 3 ft.)	
K-499	Stainless Steel Pot Rack	
DT-6R-36	3' Tubular Wall Mounted Drainage Shelf	
DT-6R-48	4' Tubular Wall Mounted Drainage Shelf	
DT-6R-60	5' Tubular Wall Mounted Drainage Shelf	
DT-6R-72	6' Tubular Wall Mounted Drainage Shelf	

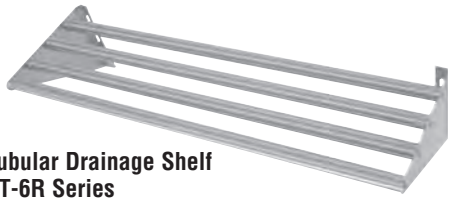

Tubular Drainage Shelf
DT-6R Series

Customer Service Available To Assist You 1-800-645-3166 8:30 am - 7:00 pm E.S.T.
Email Orders To: customer@advancetabco.com. For Smart Fabrication™ Quotes, Email To: smartfab@advancetabco.com or Fax To: 631-586-2933

www.advancetabco.com

NEW YORK Fax: (631) 242-6900
GEORGIA Fax: (770) 775-5625
TEXAS Fax: (972) 932-4795
NEVADA Fax: (775) 972-1578

RJS + ASSOCIATES
INTEGRATED FOOD SERVICE DESIGN

ITEM# 5A - PRE-RINSE FAUCET ASSEMBLY, WITH ADD ON FAUCET (1 EA REQ'D)

T&S Brass B-0133-A12-08

EasyInstall Pre-Rinse Unit, 8" wall mount, adjustable centers, EasyInstall 12" add-on faucet with stream regulator, spring action gooseneck, quarter-turn Eterna cartridges with spring checks, lever handles with color coded indexes, 18"rigid riser, 44" flexible stainless steel hose, 1.07 GPM JeTSpray spray valve, 1/2" NPT, low lead, NSF, cCSAus

ACCESSORIES

Mfr	Qty	Model	Spec
T&S Brass	1	018200-40	Replacement Hex Swivel, low-lead, rubber seals, chrome-plated brass, 7/8" NPT, NSF (for pre-rinse hose & spray valves)
T&S Brass	1	B-TEE-RGD	Tee Assembly, rigid, chrome-plated
T&S Brass	1	B-0109-01	Wall Bracket, 6"
T&S Brass	1	B-0230-KIT	Inlet Kit, 1/2" NPT nipple, close elbows, 24" flex supply hoses
T&S Brass	1		3 year limited warranty, standard

T&S BRASS AND BRONZE WORKS, INC.

2 Saddleback Cove / P.O. Box 1088
Travelers Rest, SC 29690

Travelers Rest, SC: 800-476-4103 • Simi Valley, CA: 800-423-0150 • Fax: 864-834-3518 • www.tsbrass.com

Model No.
B-0133-A-08 SERIES

Item No.

This Space for Architect/Engineer Approval

Job Name_____Date_____

Model Specified_____ Quantity_____

Customer/Wholesaler_____

Contractor_____

Architect/Engineer_____

Model	Swing Nozzle	D	K	H	6" Wall Bracket
B-0133-A06-08	059X	6"	7"	10 1/16"	No
B-0133-A06-B08	059X	6"	7"	10 1/16"	Yes
B-0133-A08-08	060X	8"	7 9/16"	10 11/16"	No
B-0133-A08-B08	060X	8"	7 9/16"	10 11/16"	Yes
B-0133-A10-08	061X	10"	8 1/4"	11 3/8"	No
B-0133-A10-B08	061X	10"	8 1/4"	11 3/8"	Yes
B-0133-A12-08	062X	12"	8 7/8"	12 1/16"	No
B-0133-A12-B08	062X	12"	8 7/8"	12 1/16"	Yes
B-0133-A14-B08	063X	14"	9 9/16"	12 3/4"	Yes

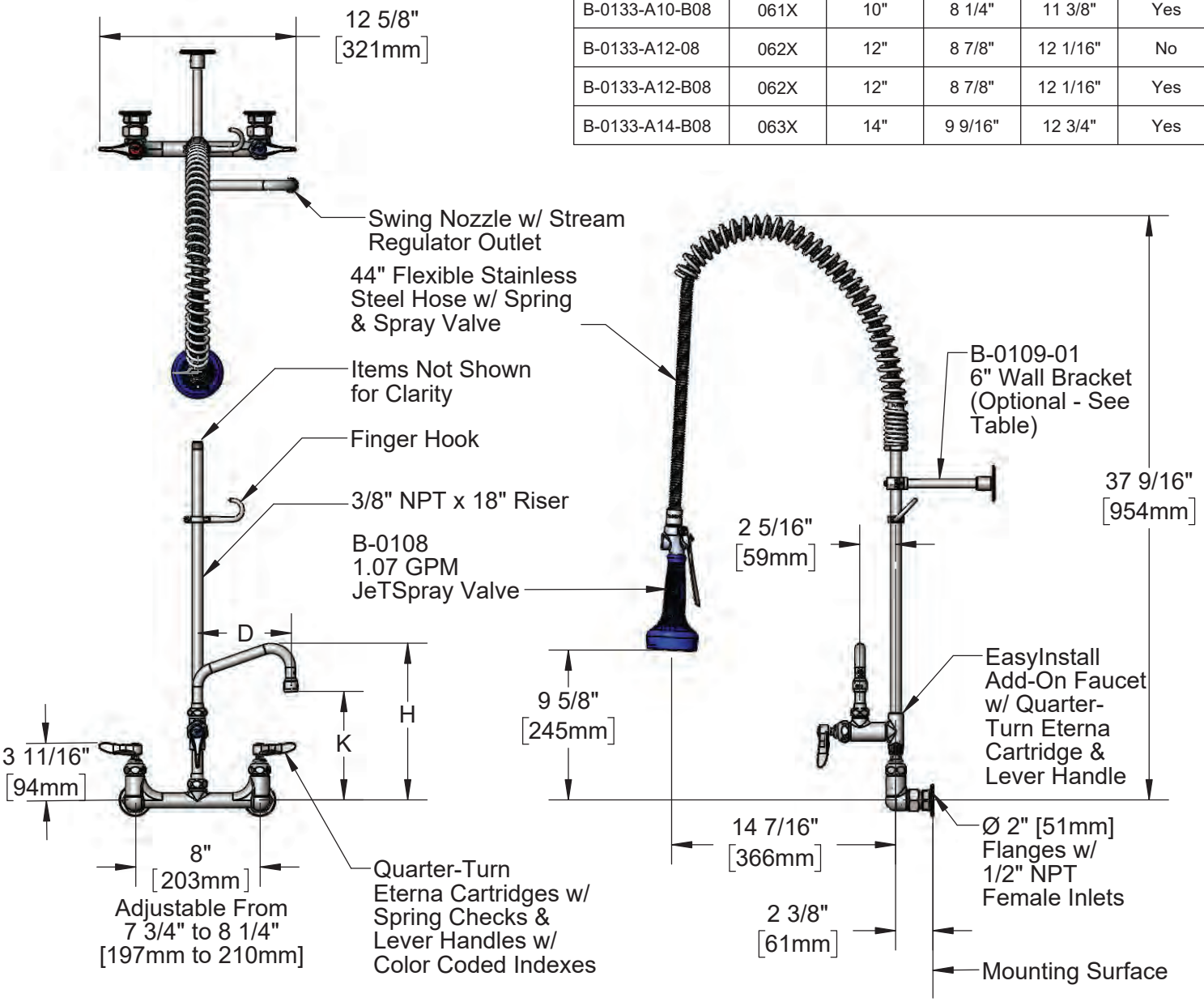

Product Specifications:

Pre-Rinse Unit: EasyInstall 8" Wall Mount Mixing Faucet, Quarter-Turn Eterna Cartridges w/ Spring Checks, Lever Handles, Add-On Faucet w/ Swing Nozzle, 44" Flexible Stainless Steel Hose, 1.07 GPM Spray Valve, 18" Riser, 6" Wall Bracket (Optional) & 1/2" NPT Female Inlets

Product Compliance:

ASME A112.18.1 / CSA B125.1
NSF 61 - Section 9
NSF 372 (Low Lead Content)
2019 DOE PRSV - Class II

Drawn: AMG	Checked: JRM	Approved: JHB	Date: 08/05/19	Scale: 1:10	Sheet: 1 of 2

T&S BRASS AND BRONZE WORKS, INC.

2 Saddleback Cove / P.O. Box 1088
Travelers Rest, SC 29690

Travelers Rest, SC: 800-476-4103 • Simi Valley, CA: 800-423-0150 • Fax: 864-834-3518 • www.tsbrass.com

Model No.
B-0133-A-08 SERIES

Item No.

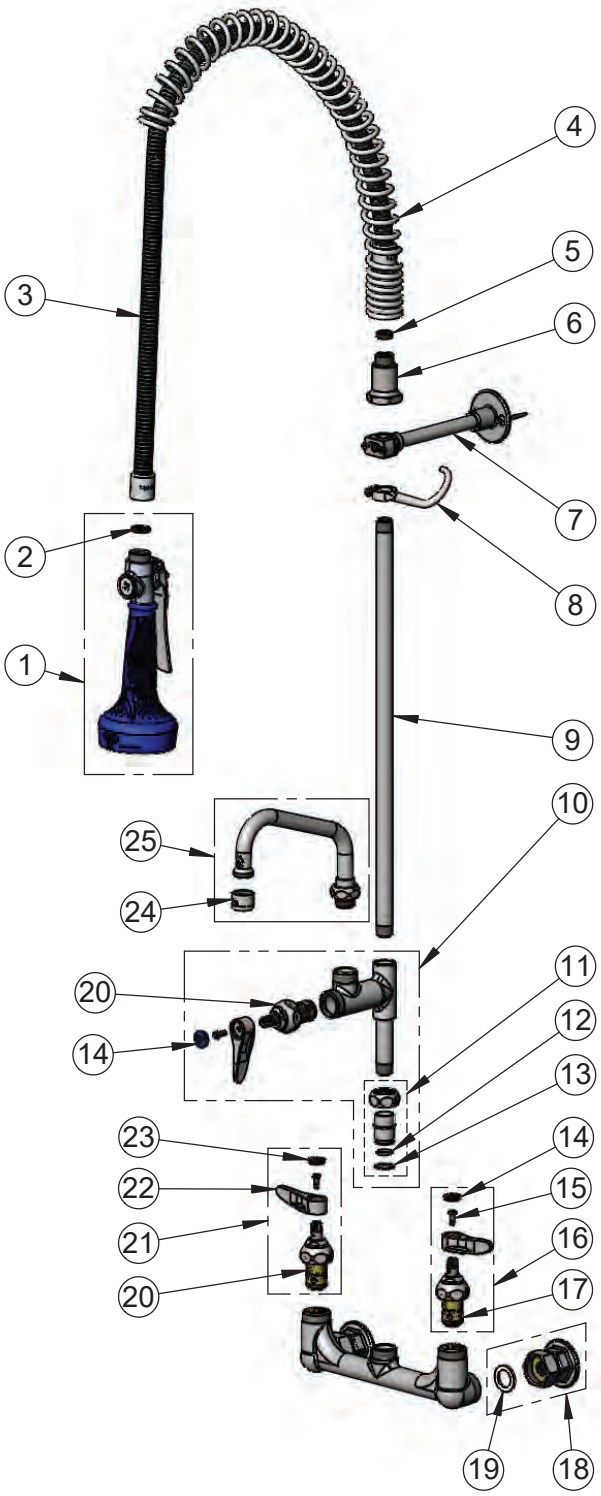

ITEM NO.	SALES NO.	DESCRIPTION
1	B-0108	1.07 GPM Spray Valve w/ Ergo-Grip
2	001014-45	Washer, B-0100 Hose Barrel
3	B-0044-H2A	44" Flexible Stainless Steel Hose, Less Handle
4	000888-45	EasyInstall Overhead Spring
5	010476-45	#27 Washer
6	000821-40	Spring Body
7	B-0109-01	6" Wall Bracket
8	004R	Finger Hook
9	000369-40	3/8" NPT x 18" Riser
10	B-0155-LNEZ	EasyInstall Add-On Faucet w/ Quarter-Turn Eterna Cartridge, RTC & Lever Handle, Less Nozzle
11	EZ-K	EasyInstall Kit
12	001065-45	O-Ring
13	014200-45	Star Washer, Anti-Rotation
14	018506-19NS	Blue Button Index, Press-in
15	000925-45	Lab Handle Screw
16	002711-40NS	Quarter-Turn Eterna Cartridge w/ Spring Check, Handle, Blue Index & Screw, LTC
17	012442-40NS	Quarter-Turn Eterna Cartridge w/ Spring Check, LTC
18	00AA	1/2" NPT Female Eccentric Flange
19	001019-45	Coupling Nut Washer
20	012443-40NS	Quarter-Turn Eterna Cartridge w/ Spring Check, RTC
21	002712-40NS	Quarter-Turn Eterna Cartridge w/ Spring Check, Handle, Red Index & Screw, RTC
22	001638-45NS	Lever Handle (New Style)
23	001193-19NS	Red Button Index, Press-in
24	B-PT	Full Flow Stream Regulator, 55/64-27
25	See Chart	Swing Nozzle

Product Specifications:

Pre-Rinse Unit: EasyInstall 8" Wall Mount Mixing Faucet, Quarter-Turn Eterna Cartridges w/ Spring Checks, Lever Handles, Add-On Faucet w/ Swing Nozzle, 44" Flexible Stainless Steel Hose, 1.07 GPM Spray Valve, 18" Riser, 6" Wall Bracket (Optional) & 1/2" NPT Female Inlets

Product Compliance:

ASME A112.18.1 / CSA B125.1
NSF 61 - Section 9
NSF 372 (Low Lead Content)
2019 DOE PRSV - Class II

Drawn: AMG	Checked: JRM	Approved: JHB	Date: 08/05/19	Scale: NTS	Sheet: 2 of 2

T&S BRASS AND BRONZE WORKS, INC.

2 Saddleback Cove / P.O. Box 1088
Travelers Rest, SC 29690

Travelers Rest, SC: 800-476-4103 • Simi Valley, CA: 800-423-0150 • Fax: 864-834-3518 • www.tsbrass.com

Model No.
018200-40

Item No.

This Space for Architect/Engineer Approval

Job Name_____Date_____

Model Specified_____ Quantity_____

Customer/Wholesaler_____

Contractor_____

Architect/Engineer_____

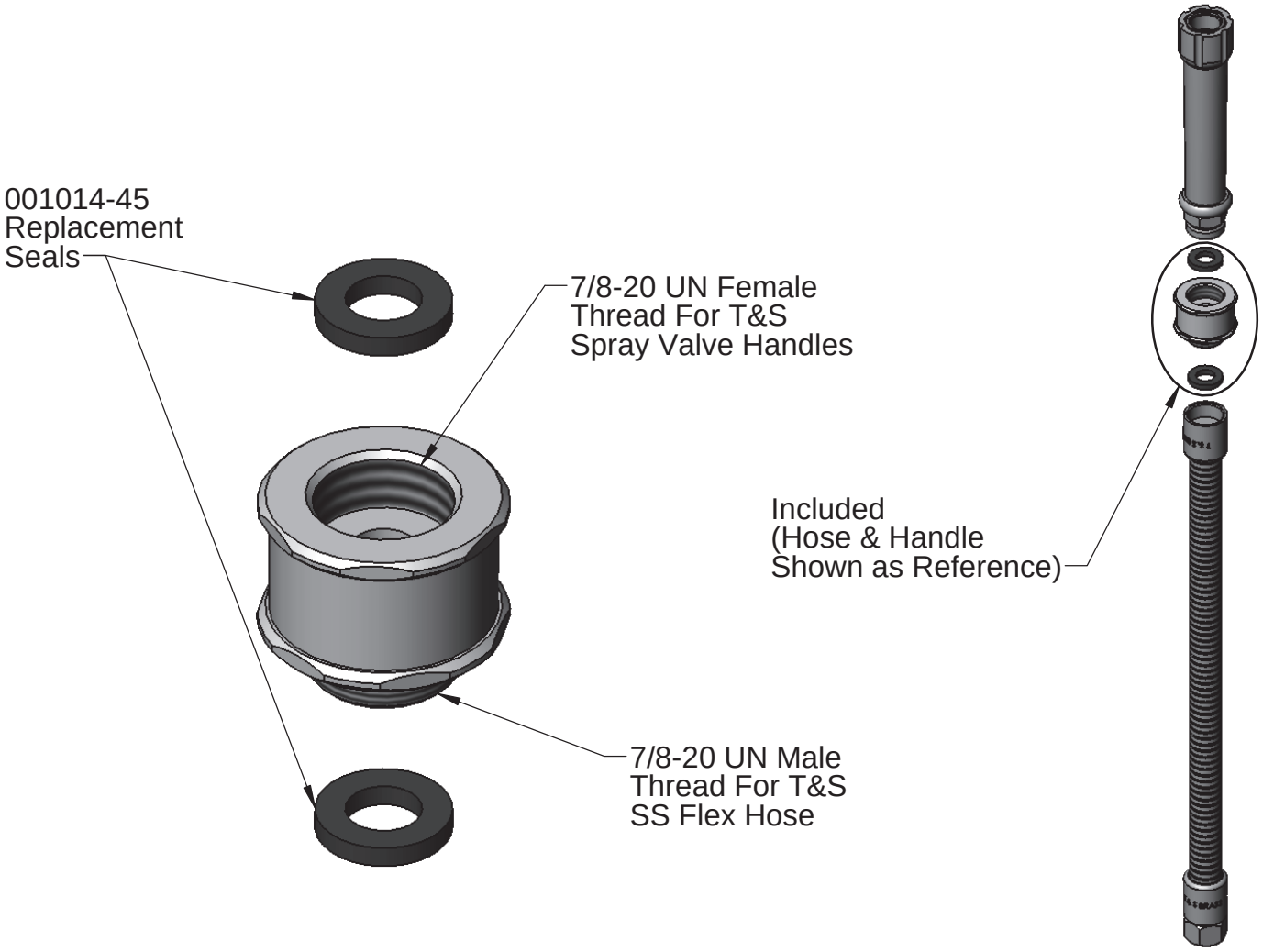

Product Specifications:
Hex Swivel for Pre-Rinse Hose & Spray Valve

Product Compliance:

ASME A112.18.1 / CSA B125.1
NSF 61 - Section 9
NSF 372 (Low Lead Content)

Drawn: JBC	Checked: JRM	Approved: JHB	Date: 01/18/16	Scale: 1:1	Sheet: 1 of 1

T&S BRASS AND BRONZE WORKS, INC.

2 Saddleback Cove / P.O. Box 1088
Travelers Rest, SC 29690

Travelers Rest, SC: 800-476-4103 • Simi Valley, CA: 800-423-0150 • Fax: 864-834-3518 • www.tsbrass.com

Model No.

B-TEE-RGD

Item No.

This Space for Architect/Engineer Approval

Job Name_____Date_____

Model Specified_____ Quantity_____

Customer/Wholesaler_____

Contractor_____

Architect/Engineer_____

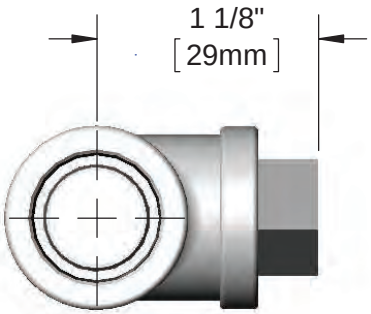

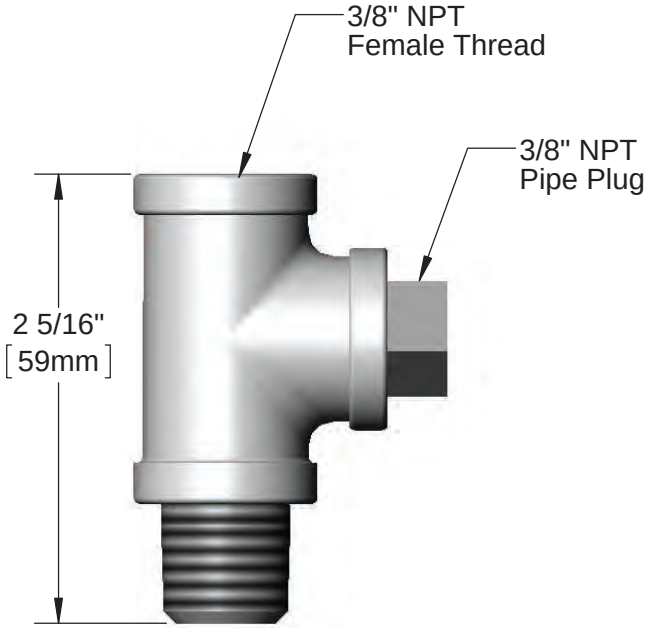

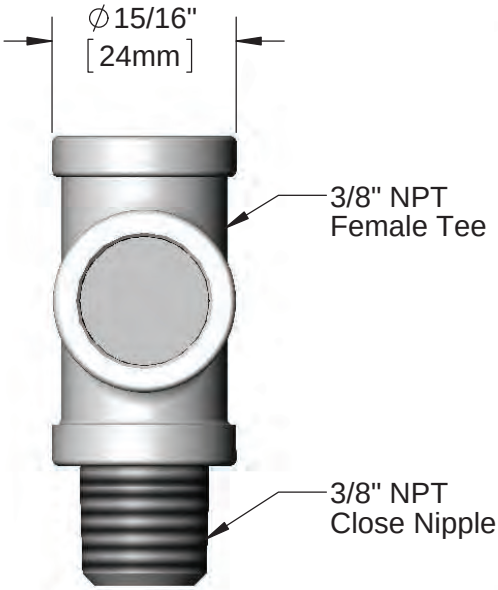

Note: 3/8" Hex L-Key Required to Remove Existing Swivel Piece (if Present on Pre-Rinse Unit) from EasyInstall Riser.

3/8" Hex
L-Key Included

Product Specifications:

Rigid Tee Assembly (Chrome Plated)

Product Compliance:

ASME A112.18.1 / CSA B125.1
NSF 61 - Section 9
NSF 372 (Low Lead Content)

Drawn: JBC	Checked: JRM	Approved: JHB	Date: 04/23/16	Scale: 1:1	Sheet: 1 of 1

T&S BRASS AND BRONZE WORKS, INC.

2 Saddleback Cove / P.O. Box 1088
Travelers Rest, SC 29690

Travelers Rest, SC: 800-476-4103 • Simi Valley, CA: 800-423-0150 • Fax: 864-834-3518 • www.tsbrass.com

Model No.
B-0109-01

Item No.

This Space for Architect/Engineer Approval

Job Name_____Date_____

Model Specified_____ Quantity_____

Customer/Wholesaler_____

Contractor_____

Architect/Engineer_____

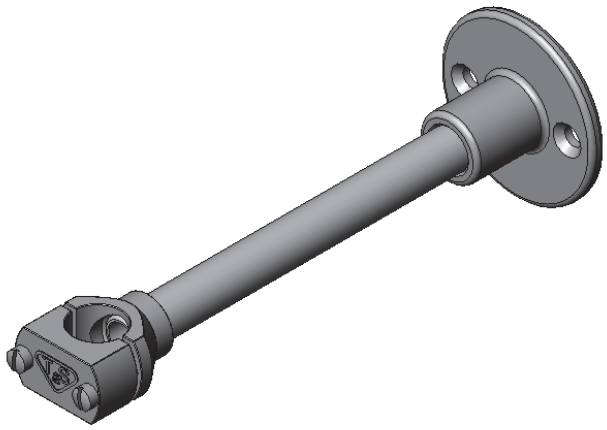

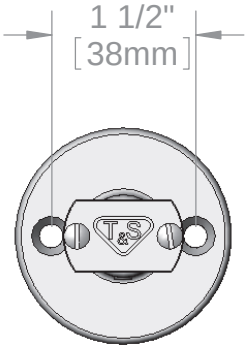

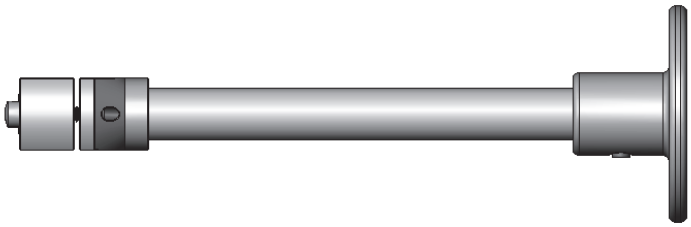

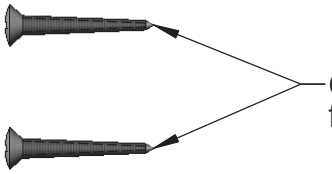

Chrome Plated Brass Wood Screws
for Wall Mounting (Included)

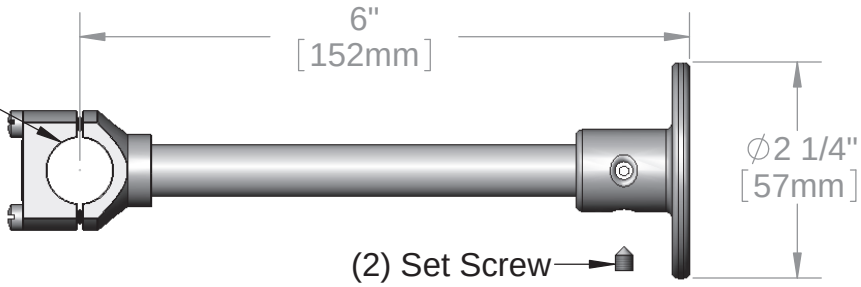

Product Specifications:
6" Wall Bracket Assembly for 3/8" Pipe
w/ Mounting Hardware

Drawn	Checked	Approved
JRM	KJG	JHB
Scale: 1:2		Date: 06/02/14

Sheet: 1 of 1

T&S BRASS AND BRONZE WORKS, INC.

2 Saddleback Cove / P.O. Box 1088
Travelers Rest, SC 29690

Travelers Rest, SC: 800-476-4103 • Simi Valley, CA: 800-423-0150 • Fax: 864-834-3518 • www.tsbrass.com

Model No.

B-0230-KIT

Item No.

This Space for Architect/Engineer Approval

Job Name_____Date_____

Model Specified_____ Quantity_____

Customer/Wholesaler_____

Contractor_____

Architect/Engineer_____

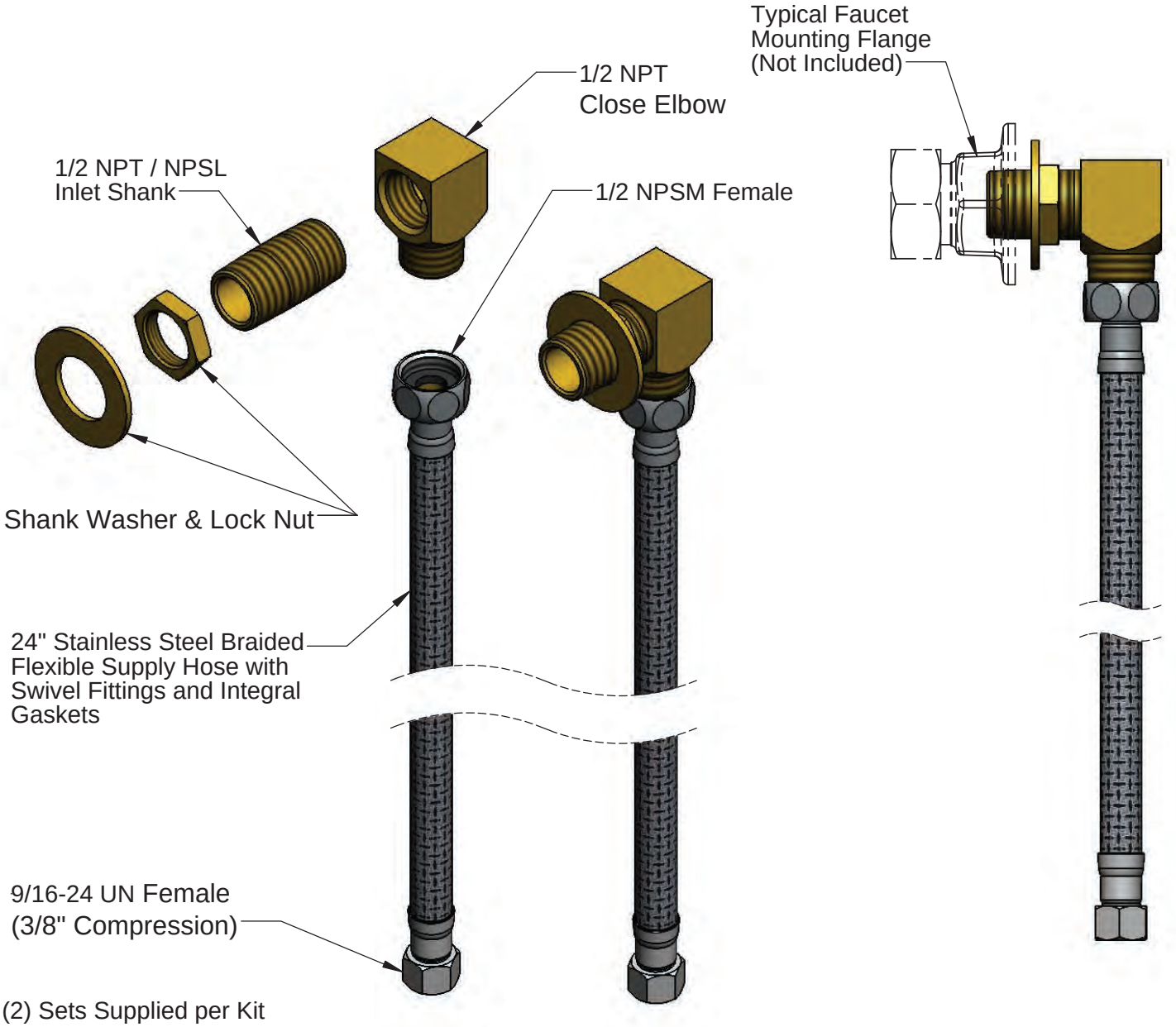

(2) Sets Supplied per Kit

Product Specifications:

Inlet Kit:
1/2" Inlet Shanks, Close Elbows
and 24" Flexible Supply Hoses

Product Compliance:

ASME A112.18.1 / CSA B125.1
NSF 61 - Section 9
NSF 372 (Low Lead Content)

Drawn: JBC	Checked: JRM	Approved: JHB	Date: 02/23/16	Scale: 1:4	Sheet: 1 of 2

T&S BRASS AND BRONZE WORKS, INC.

2 Saddleback Cove / P.O. Box 1088
Travelers Rest, SC 29690

Travelers Rest, SC: 800-476-4103 • Simi Valley, CA: 800-423-0150 • Fax: 864-834-3518 • www.tsbrass.com

Model No.
B-0230-KIT

Item No.

ITEM NO.	SALES NO.	DESCRIPTION
1	B-0230-K	1/2" Inlet Assembly Kit (2 Sets per Kit)
2	017420-45	24" Flexible Supply Hose (Sold Individually)

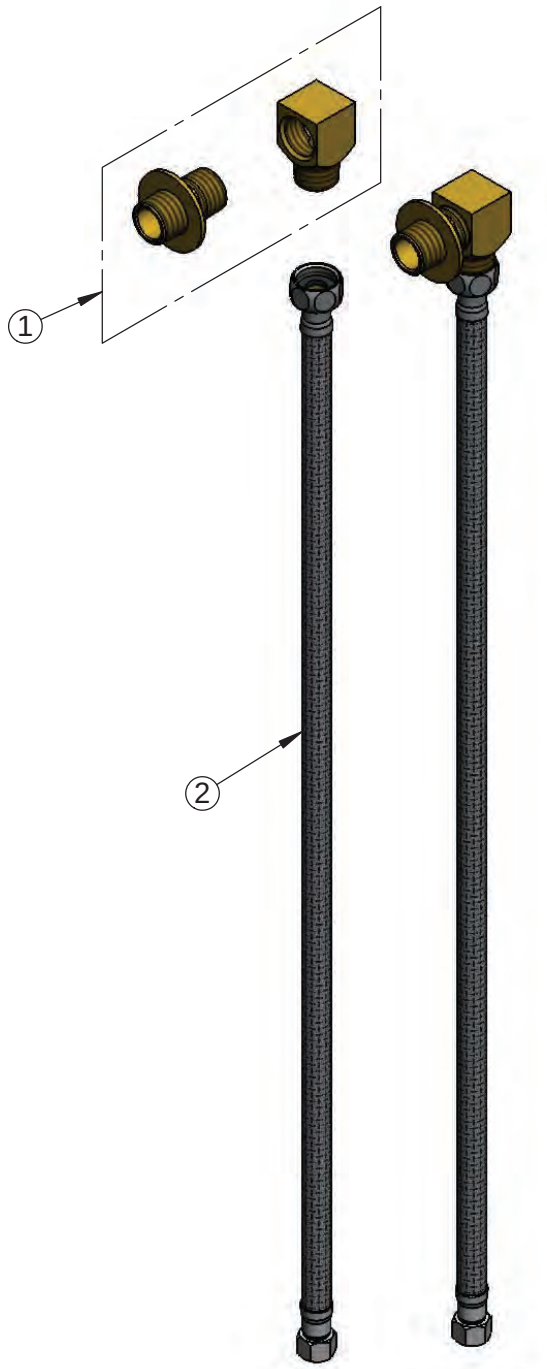

Product Specifications:
Inlet Kit:
1/2" Inlet Shanks, Close Elbows
and 24" Flexible Supply Hoses

Product Compliance:

ASME A112.18.1 / CSA B125.1
NSF 61 - Section 9
NSF 372 (Low Lead Content)

Drawn: JBC	Checked: JRM	Approved: JHB	Date: 02/23/16	Scale: NTS	Sheet: 2 of 2

RJS + ASSOCIATES
INTEGRATED FOOD SERVICE DESIGN

ITEM# 5B - WALL / SPLASH MOUNT FAUCET (1 EA REQ'D)

T&S Brass B-0231

Sink Mixing Faucet, wall mount, 8" centers, 12" swing nozzle, lever handles, quarter-turn Eterna cartridges, 1/2" NPT female inlets, low lead, ADA Compliant

ACCESSORIES

Mfr	Qty	Model	Spec
T&S Brass	1	B-0230-KIT	Inlet Kit, 1/2" NPT nipple, close elbows, 24" flex supply hoses

T&S BRASS AND BRONZE WORKS, INC.

2 Saddleback Cove / P.O. Box 1088
Travelers Rest, SC 29690

Travelers Rest, SC: 800-476-4103 • Simi Valley, CA: 800-423-0150 • Fax: 864-834-3518 • www.tsbrass.com

Model No.
B-0231

Item No.

ADA Compliant

This Space for Architect/Engineer Approval

Job Name_____Date_____

Model Specified_____ Quantity_____

Customer/Wholesaler_____

Contractor_____

Architect/Engineer_____

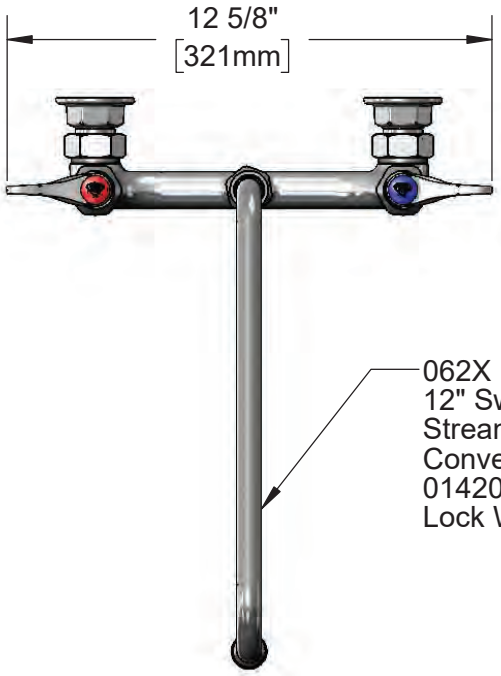

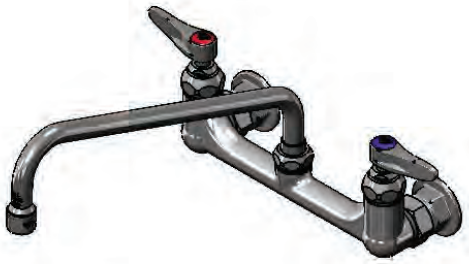

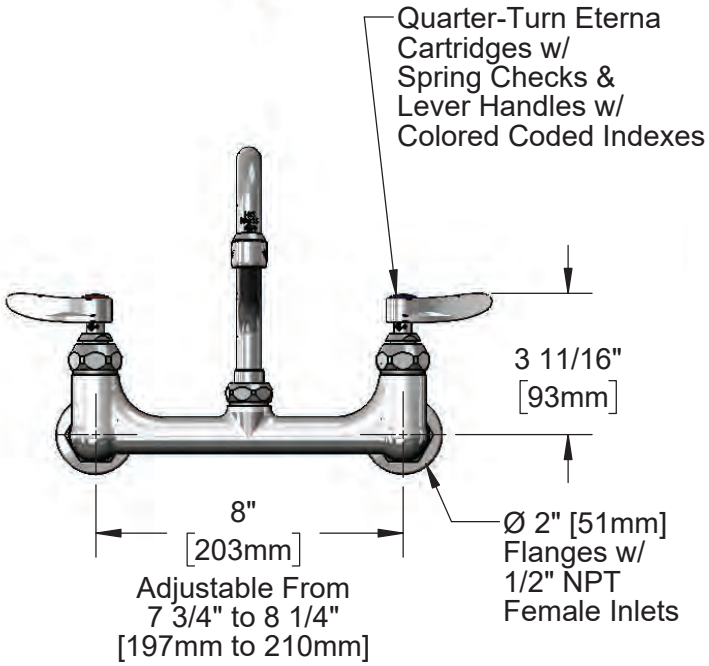

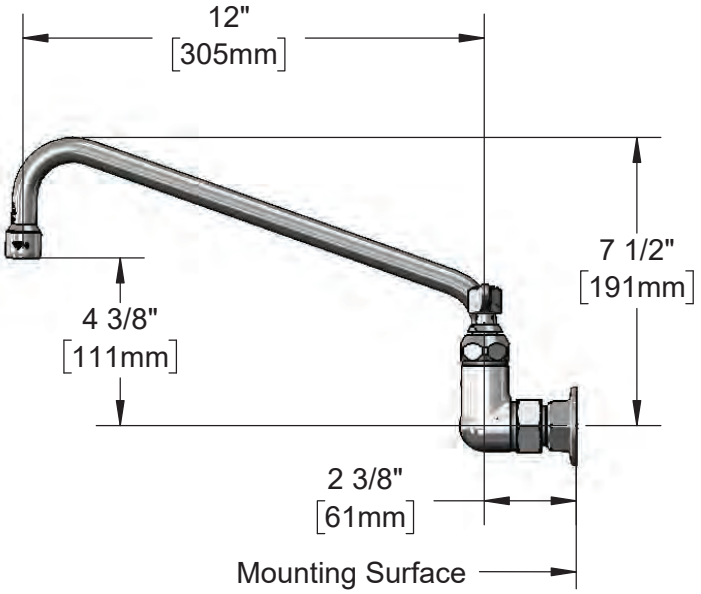

Product Specifications:
8" Wall Mount Mixing Faucet w/ Quarter-Turn Eterna Cartridges w/ Spring Checks, Lever Handles, 12" Swing Nozzle & 1/2" NPT Female Inlets

Product Compliance:
ASME A112.18.1 / CSA B125.1
NSF 61 - Section 9
NSF 372 (Low Lead Content)
ANSI A117.1 (ADA)

Drawn: MRC	Checked: JRM	Approved: JHB	Date: 01/22/18	Scale: 1:5	Sheet: 1 of 2

T&S BRASS AND BRONZE WORKS, INC.

2 Saddleback Cove / P.O. Box 1088
Travelers Rest, SC 29690

Travelers Rest, SC: 800-476-4103 • Simi Valley, CA: 800-423-0150 • Fax: 864-834-3518 • www.tsbrass.com

Model No.
B-0231

Item No.

ITEM NO.	SALES NO.	DESCRIPTION
1	B-PT	Full Flow Stream Regulator, 55/64-27
2	062X	12" Swing Nozzle
3	009538-45	Swivel Washer
4	011429-45	Swivel Sleeves (2)
5	001074-45	O-Ring
6	014200-45	Star Washer, Anti-Rotation
7	002711-40NS	Quarter-Turn Eterna Cartridge w/ Spring Check, Handle, Blue Index & Screw, LTC
8	001019-45	Coupling Nut Washer
9	00AA	1/2" NPT Female Eccentric Flange
10	012442-40NS	Quarter-Turn Eterna Cartridge w/ Spring Check, LTC
11	001638-45NS	Lever Handle (New Style)
12	000925-45	Lab Handle Screw
13	018506-19NS	Blue Button Index, Press-in
14	002712-40NS	Quarter-Turn Eterna Cartridge w/ Spring Check, Handle, Red Index & Screw, RTC
15	012443-40NS	Quarter-Turn Eterna Cartridge w/ Spring Check, RTC
16	001193-19NS	Red Button Index, Press-in

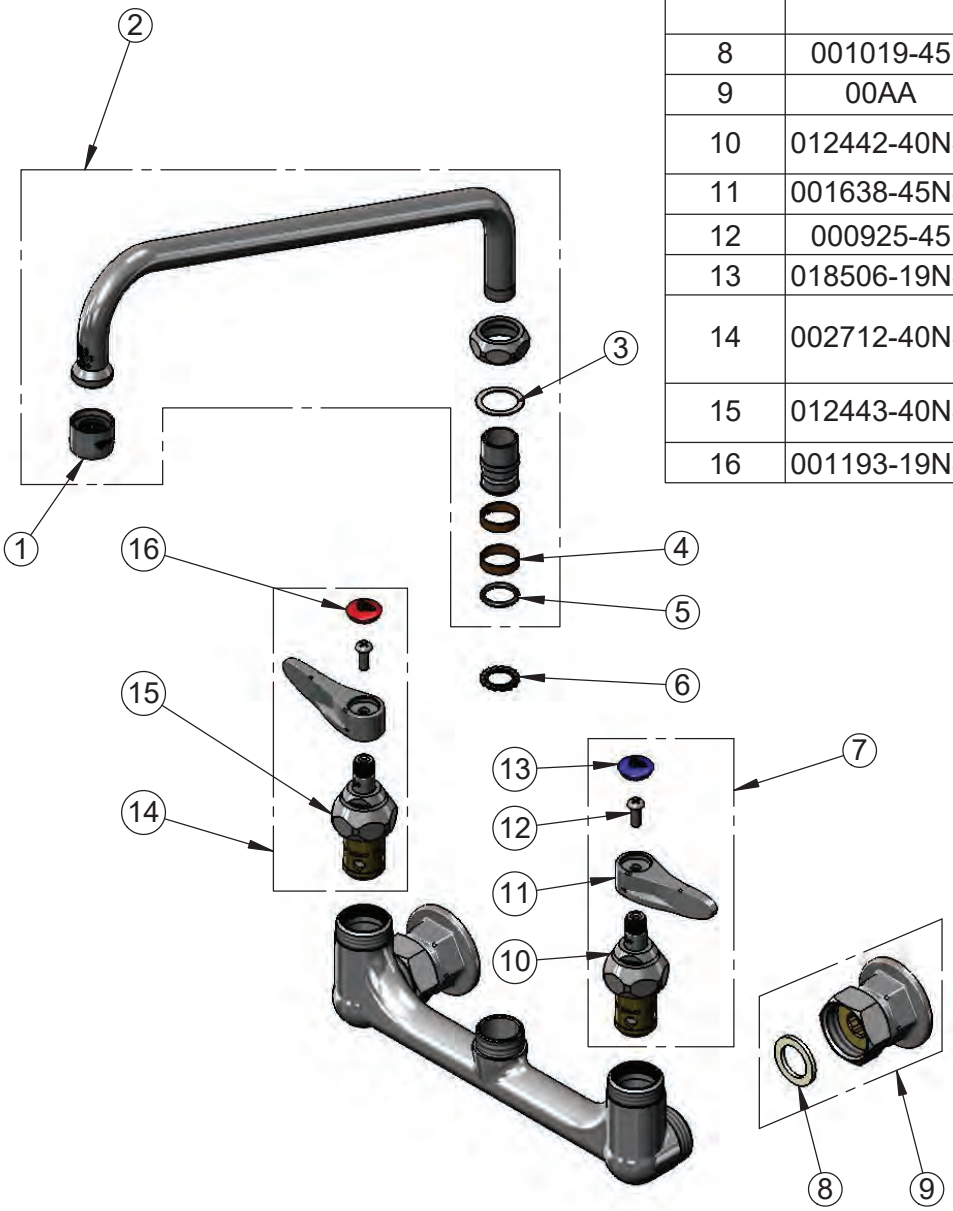

Product Specifications:
8" Wall Mount Mixing Faucet w/ Quarter-Turn Eterna Cartridges w/ Spring Checks, Lever Handles, 12" Swing Nozzle & 1/2" NPT Female Inlets

Product Compliance:
ASME A112.18.1 / CSA B125.1
NSF 61 - Section 9
NSF 372 (Low Lead Content)
ANSI A117.1 (ADA)

Drawn: MRC	Checked: JRM	Approved: JHB	Date: 01/22/18	Scale: NTS	Sheet: 2 of 2

T&S BRASS AND BRONZE WORKS, INC.

2 Saddleback Cove / P.O. Box 1088
Travelers Rest, SC 29690

Travelers Rest, SC: 800-476-4103 • Simi Valley, CA: 800-423-0150 • Fax: 864-834-3518 • www.tsbrass.com

Model No.

B-0230-KIT

Item No.

This Space for Architect/Engineer Approval

Job Name_____Date_____

Model Specified_____ Quantity_____

Customer/Wholesaler_____

Contractor_____

Architect/Engineer_____

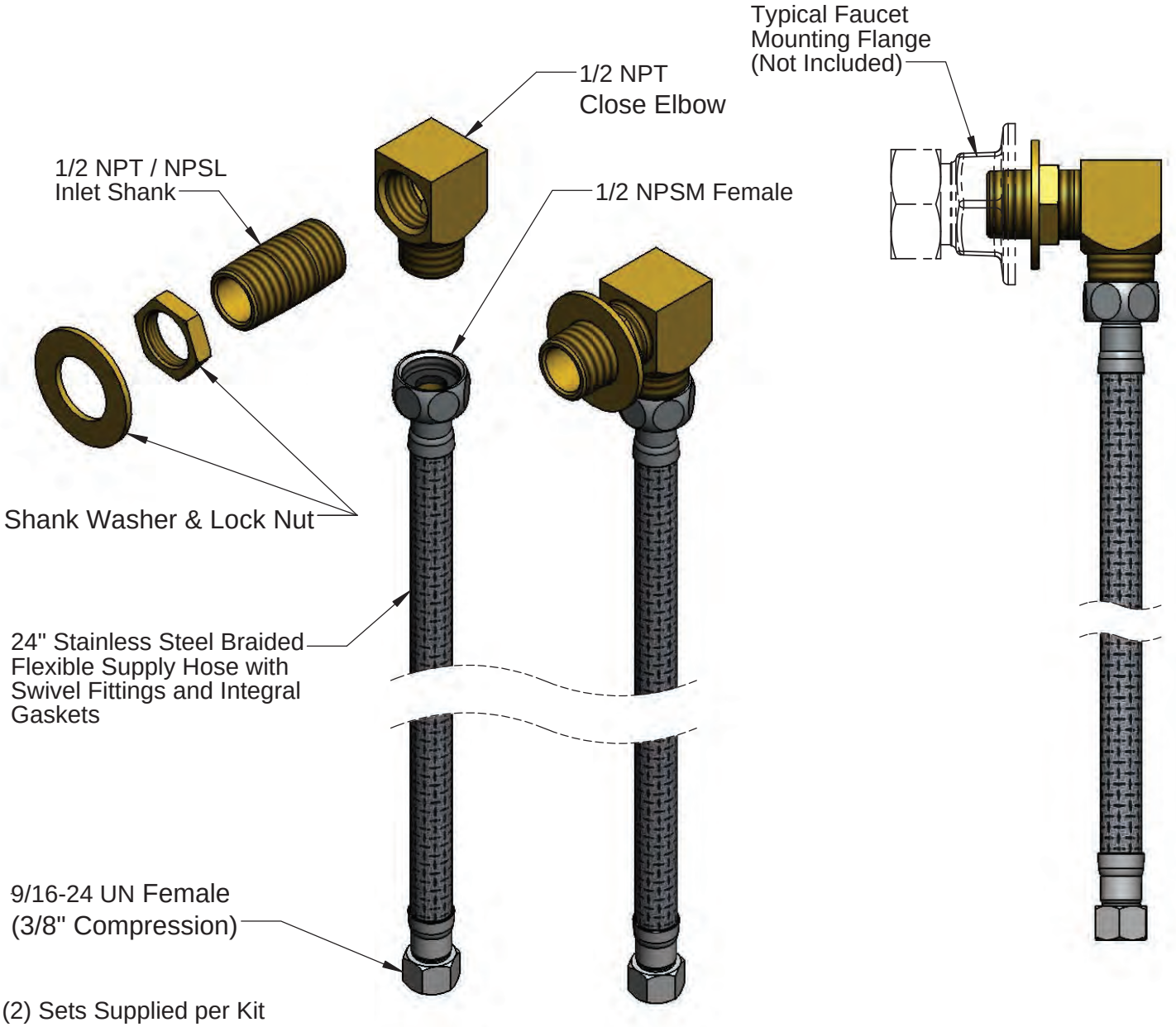

(2) Sets Supplied per Kit

Product Specifications:

Inlet Kit:
1/2" Inlet Shanks, Close Elbows
and 24" Flexible Supply Hoses

Product Compliance:

ASME A112.18.1 / CSA B125.1
NSF 61 - Section 9
NSF 372 (Low Lead Content)

Drawn: JBC	Checked: JRM	Approved: JHB	Date: 02/23/16	Scale: 1:4	Sheet: 1 of 2

T&S BRASS AND BRONZE WORKS, INC.

2 Saddleback Cove / P.O. Box 1088
Travelers Rest, SC 29690

Travelers Rest, SC: 800-476-4103 • Simi Valley, CA: 800-423-0150 • Fax: 864-834-3518 • www.tsbrass.com

Model No.
B-0230-KIT

Item No.

ITEM NO.	SALES NO.	DESCRIPTION
1	B-0230-K	1/2" Inlet Assembly Kit (2 Sets per Kit)
2	017420-45	24" Flexible Supply Hose (Sold Individually)

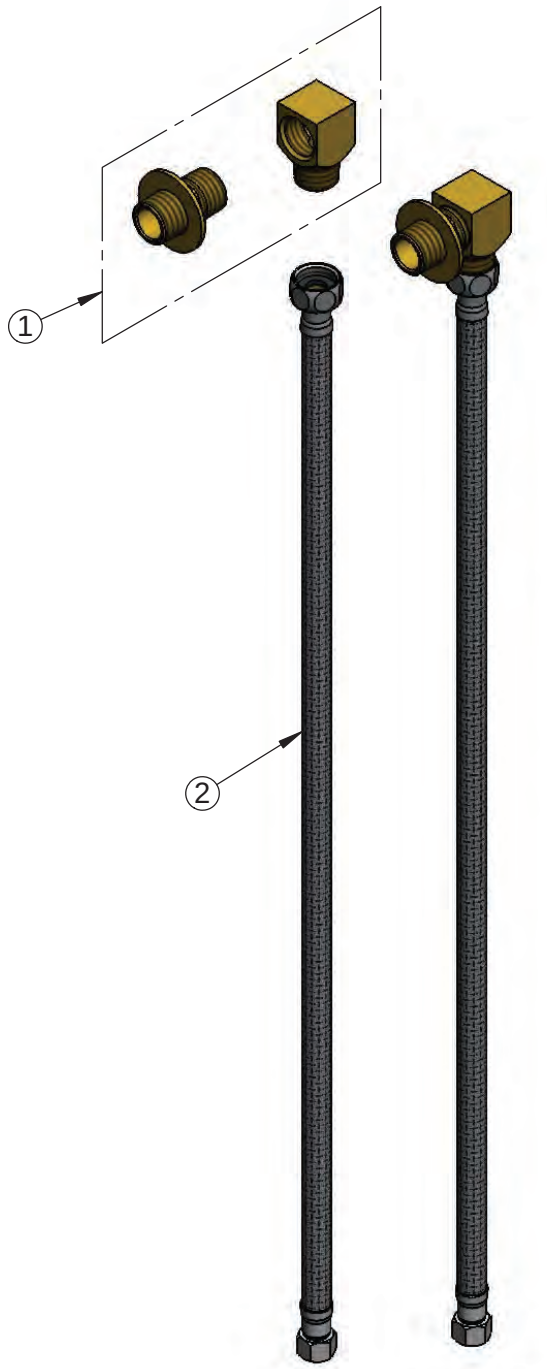

Product Specifications:
Inlet Kit:
1/2" Inlet Shanks, Close Elbows
and 24" Flexible Supply Hoses

Product Compliance:

ASME A112.18.1 / CSA B125.1
NSF 61 - Section 9
NSF 372 (Low Lead Content)

Drawn: JBC	Checked: JRM	Approved: JHB	Date: 02/23/16	Scale: NTS	Sheet: 2 of 2

RJS + ASSOCIATES
INTEGRATED FOOD SERVICE DESIGN

ITEM# 5C - POT RACK (1 EA REQ'D)

fabctr STAINLESS STEEL

Similar to standard detail FD-3.8. This standard detail is to be utilized as a basic minimum guideline only. Refer to these written specifications and any fabrication details included in the contract drawings for precise and complete fabrication instructions.

ACCESSORIES

Mfr	Qty	Model	Spec
fabctr	1		Install in place as shown on plans using stainless steel fasteners.
fabctr	1		Length, width and configuration per plan.
fabctr	1		Field verify room dimensions and adjust size as may be required.
fabctr	1		Verify and coordinate mounting height of shelves with Owner/Operator and equipment located below bottom shelf.
fabctr	1		Coordinate installation above Item #635, PowerSoak Sink.

Item #5C

STAINLESS STEEL

Fabricator

RJS | Associates
Integrated Food Service Design

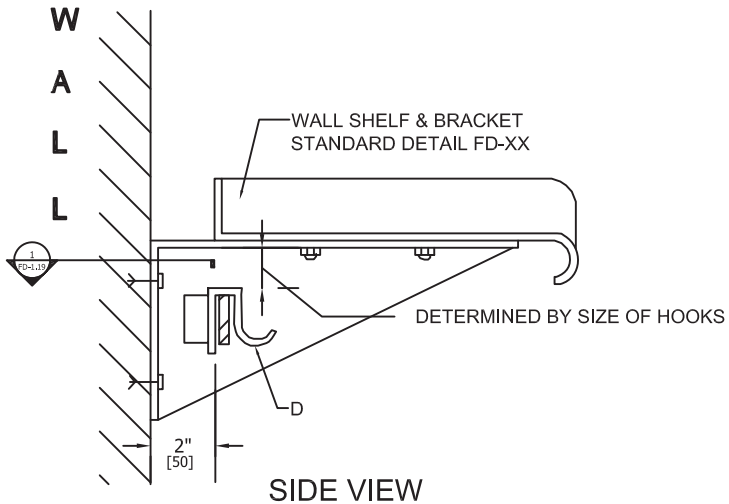

SIDE VIEW

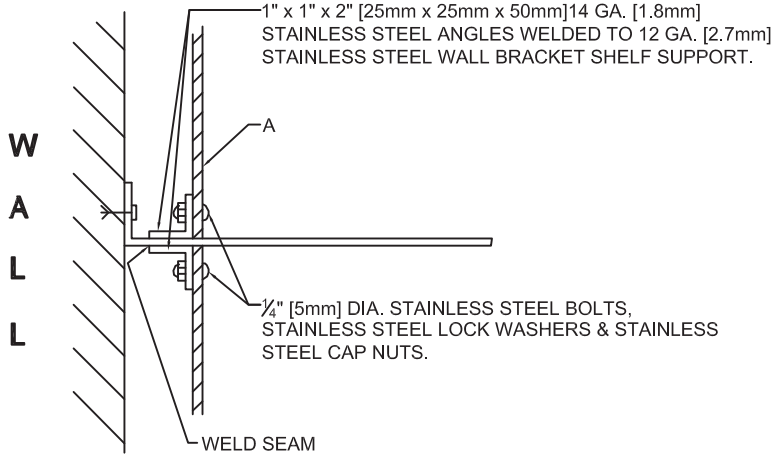

SECTION 1 - THRU BRACKET

LEGEND:

A. BANDS - ¼" x 2" [5mm x 50mm] STAINLESS STEEL BAR.
B. SPREADERS - 1" [25mm] DIA. 16 GA. [1.5mm] STAINLESS STEEL.
C. HOOKS - STAINLESS STEEL DOUBLE PRONG SNAP-OVER COMPONENT HARDWARE GROUP NO. 77-4401, 6" [150mm] O.C.
D. COMPONENT HARDWARE GROUP NO. J79-4115 HOOKS, 6" [150mm] O.C.

DETAIL #	DESCRIPTION:	
FD-3.8	WALL SHELF UTENSIL RACK	
	SCALE: N.T.S.	MATERIAL: 304 STAINLESS STEEL CONSTRUCTION

RJS + Associates

Colchester Senior Center

RJS + ASSOCIATES
INTEGRATED FOOD SERVICE DESIGN

ITEM# 6 - WIRE SHELVING (1 EA REQ'D)

Metro 1448NK3

Super Erecta® Shelf, wire, 48"W x 14"D, Metroseal™ Green epoxy-coated corrosion-resistant finish with Microban® antimicrobial protection, plastic split sleeves are included in each carton, NSF

ACCESSORIES

Mfr	Qty	Model	Spec
Metro	1	74UPK3	Super Erecta® SiteSelect™ Post, 73-7/8"H, for use with stem casters, Metroseal 3 Green epoxy coated corrosion-resistant finish with Microban® antimicrobial protection

We put space to work.

Item # _____

Job _____

Super Erecta® Shelf
Wire Shelving

Super Erecta Chrome Wire

- **Unique Design:** The open wire design of these shelves minimizes dust accumulation and allows free circulation of air, greater visibility of stored items and greater light penetration.
- **Durable Construction:** Super Erecta shelves and posts are constructed of heavy-gauge carbon steel or Type 304 stainless steel.
- **Choice of Finishes:** Super Erecta Brite™ and chrome-plated for dry storage; Metroseal™ Epoxy (green or gray), and Type 304 stainless steel for corrosive environments; and attractive epoxy color options for merchandising applications.
- **Metroseal:** Proprietary rust-resistant finish is a durable epoxy coating over a protective zinc substrate. Metroseal contains Microban® antimicrobial product protection which continuously fights the growth of bacteria, mold, and mildew that cause stains and odors. 12-year limited warranty against rust and corrosion.
- **Versatile:** Super Erecta® Shelf wire shelving can adapt to your changing needs. By using various accessories, hundreds of shelving configurations become possible.
- **Fast, Secure Assembly:** SiteSelect® Posts have a double groove visual guide feature every 8" (203mm), circular grooves at 1" (25mm) increments, and are numbered at 2" (50mm) intervals. A patented, tapered split sleeve snaps together around each post. Tapered openings in the shelf corners slide over the tapered split sleeves providing a positive lock. Shelf is assembled in minutes without the use of any special tools.
- **Adjustability:** Shelves can be adjusted at 1" (25mm) intervals along the entire length of the post.
- **Shelf Ribs:** Run front to back, allowing you to slide items on and off shelves smoothly.
- **Shelf Accessibility:** Shelves can be loaded/unloaded easily from all sides This open construction allows maximum use of storage cube.
- **Adjustable Feet:** Bolt levelers compensate for surface irregularities.

Note: Stainless stationary posts are equipped with stainless steel leveling feet.

Super Erecta with Metroseal

Gray Metroseal Epoxy Finish with Microban

Green Metroseal Epoxy Finish with Microban

InterMetro Industries Corporation
North Washington Street, Wilkes-Barre, PA 18705
Product Information. U.S. and Canada: 1.800.992.1776
Outside U.S. and Canada: www.metro.com/contactus

L02-006e
Printed in U.S.A. 6/20

Super Erecta® Shelf Wire Shelving

Wire Shelves

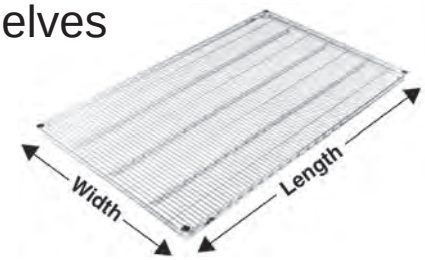

Aluminum Split Sleeve

- See spec sheet 10.14 for epoxy color options.
- Plastic split sleeves are included with each shelf Replacements are available: Cat. No. **9985** (bag of 4)
- Aluminum split sleeves are recommended for abusive mobile applications. Sleeves with stainless C-rings must be used for cart wash applications (exceeding 200°F/93°C) and for all autoclave applications.
  Cat. No. **9986Z** (bag of 4 with zinc C-rings)
  Cat. No. **9986S** (bag of 4 with stainless steel C-rings)
- Weight capacity (evenly distributed) per shelf
  800 lbs. (363kg) for lengths of 18" to 48" (457 to 1219mm)
  600 lbs. (272kg) for lengths of 54" (1370mm) or longer
- Weight capacity (evenly distributed) per unit.
  Stationary shelving units have a maximum load capacity (evenly distributed) of 2,000 lbs. (907kg). Mobile units have a maximum capacity of three times the caster load rating up to but not exceeding 1,000 lbs. (453kg) total. Consult the Metro catalog for caster load ratings.

Cat. No. Super Erecta Brite	Cat. No. Chrome	Cat. No. Metroseal Green (K3) with Microban	Cat. No. Metroseal Gray (K4) with Microban	Cat. No. Stainless	Nominal Width/Length (in.)	Nominal Width/Length (mm)	Approx. Pkd. Wt. (lbs.)	Approx. Pkd. Wt. (kg)
1424BR	**1424NC**	**1424NK3**	**1424NK4**	**1424NS**	14x24	355x610	5.3	2.4
1430BR	**1430NC**	**1430NK3**	**1430NK4**	**1430NS**	14x30	355x760	6.3	2.8
1436BR	**1436NC**	**1436NK3**	**1436NK4**	**1436NS**	14x36	355x914	7.5	3.4
1442BR	**1442NC**	**1442NK3**	**1442NK4**	**1442NS**	14x42	355x1066	8.3	3.8
1448BR	**1448NC**	**1448NK3**	**1448NK4**	**1448NS**	14x48	355x1219	9.4	4.3
1460BR	**1460NC**	**1460NK3**	**1460NK4**	**1460NS**	14x60	355x1524	11.8	5.4
1472BR	**1472NC**	**1472NK3**	**1472NK4**	**1472NS**	14x72	355x1829	14.4	6.5
-	**1818NC**	**1818NK3**	**1818NK4**	**-**	18x18	457x457	5.3	2.4
1824BR	**1824NC**	**1824NK3**	**1824NK4**	**1824NS**	18x24	457x610	6.1	2.7
1830BR	**1830NC**	**1830NK3**	**1830NK4**	**1830NS**	18x30	457x760	7.1	3.2
1836BR	**1836NC**	**1836NK3**	**1836NK4**	**1836NS**	18x36	457x914	8.2	3.7
1842BR	**1842NC**	**1842NK3**	**1842NK4**	**1842NS**	18x42	457x1066	9.3	4.2
1848BR	**1848NC**	**1848NK3**	**1848NK4**	**1848NS**	18x48	457x1219	10.7	4.9
1854BR	**1854NC**	**1854NK3**	**1854NK4**	**1854NS**	18x54	457x1370	11.9	5.4
1860BR	**1860NC**	**1860NK3**	**1860NK4**	**1860NS**	18x60	457x1524	13.4	6.1
1872BR	**1872NC**	**1872NK3**	**1872NK4**	**1872NS**	18x72	457x1829	14.6	6.6
2124BR	**2124NC**	**2124NK3**	**2124NK4**	**2124NS**	21x24	530x610	10.1	4.6
2130BR	**2130NC**	**2130NK3**	**2130NK4**	**2130NS**	21x30	530x760	10.5	4.8
2136BR	**2136NC**	**2136NK3**	**2136NK4**	**2136NS**	21x36	530x914	10.7	4.9
2142BR	**2142NC**	**2142NK3**	**2142NK4**	**2142NS**	21x42	530x1066	11.5	5.2
2148BR	**2148NC**	**2148NK3**	**2148NK4**	**2148NS**	21x48	530x1219	11.9	5.4
2154BR	**2154NC**	**2154NK3**	**2154NK4**	**2154NS**	21x54	530x1370	12.9	5.8
2160BR	**2160NC**	**2160NK3**	**2160NK4**	**2160NS**	21x60	530x1524	13.4	6.1
2172BR	**2172NC**	**2172NK3**	**2172NK4**	**2172NS**	21x72	530x1829	14.4	6.5
2424BR	**2424NC**	**2424NK3**	**2424NK4**	**2424NS**	24x24	610x610	6.5	3.0
2430BR	**2430NC**	**2430NK3**	**2430NK4**	**2430NS**	24x30	610x760	8.3	3.8
2436BR	**2436NC**	**2436NK3**	**2436NK4**	**2436NS**	24x36	610x914	10.1	4.6
2442BR	**2442NC**	**2442NK3**	**2442NK4**	**2442NS**	24x42	610x1066	11.9	5.4
2448BR	**2448NC**	**2448NK3**	**2448NK4**	**2448NS**	24x48	610x1219	14.2	6.4
2454BR	**2454NC**	**2454NK3**	**2454NK4**	**2454NS**	24x54	610x1370	16.1	7.3
2460BR	**2460NC**	**2460NK3**	**2460NK4**	**2460NS**	24x60	610x1524	18.0	8.2
2472BR	**2472NC**	**2472NK3**	**2472NK4**	**2472NS**	24x72	610x1829	21.4	9.7

Note: The actual length of the shelves is 1/8" (3.2mm) shorter than the nominal dimension shown. The actual depth of the shelves is 1/8" (3.2mm) greater than the nominal dimension shown.

Note: The following restrictions apply to shelving units that utilize 14" (355mm) wide shelves:
Free-standing units: Units taller than 63" (1600mm) must be properly fastened to the floor or wall using Metro foot plates or wall brackets.
Mobile units: maximum allowable post height is 54" (1370mm).

Super Erecta® Shelf Wire Shelving

SiteSelect® Posts

SiteSelect Posts feature double grooves every 8" (203mm) to aid assembly.

Stationary Posts - Equipped with a leveling bolt to account for uneven floors.

- Height includes leveling bolt (completely tightened) and post cap. Leveling bolt can be adjusted 0.5" (13mm).
- Foot plates may be ordered separately and installed in place of leveling foot.
- Replacement leveling bolts: Zinc Cat. No. **RPF04-004**, Stainless Steel Cat. No. **RPF04-004C**
- Replacement post cap for standard posts: Black Cat. No. **RPC06-035**

Cat. No. Chrome	Cat. No. Metroseal Green (K3) with Microban	Cat. No.. Metroseal Gray (K4) with Microban	Cat. No. Stainless Steel	Actual Height (in.)	Actual Height (mm)	Approx Pkd. Wt. (lbs.)	Approx Pkd. Wt. (kg)
7P	**7PK3**	**7PK4**	**-**	7.375	187	0.5	0.3
13P	**13PK3**	**13PK4**	**13PS**	14.375	365	1	0.5
27P	**27PK3**	**27PK4**	**27PS**	28.375	720	1.75	0.75
33P	**33PK3**	**33PK4**	**33PS**	34.375	873	2	0.9
54P	**54PK3**	**54PK4**	**54PS**	54.4375	1382	3	1.4
63P	**63PK3**	**63PK4**	**63PS**	62.4375	1585	3.5	1.6
74P	**74PK3**	**74PK4**	**74PS**	74.5	1892	4	1.8
86P	**86PK3**	**86PK4**	**86PS**	86.5	2197	5	2.3
***96P**	**-**	**-**	**-**	96.5	2450	5.5	2.5

*96P should not be used on units less than 24" (610mm) deep. Consult Metro Engineering for alternate recommendations.

Stationary Post

Mobile Posts (For use with Stem Casters)

- Height includes post cap.

Cat. No. Chrome	Cat. No. Metroseal Green (K3) with Microban	Cat. No. Metroseal Gray (K4) with Microban	Cat. No. Stainless Steel	Actual Height (in.)	Actual Height (mm)	Approx. Pkd. Wt. (lbs.)	Approx. Pkd. Wt. (kg)
13UP	**13UPK3**	**13UPK4**	**13UPS**	13.75	349	1	0.5
27UP	**27UPK3**	**27UPK4**	**27UPS**	27.75	704	1.75	0.75
33UP	**33UPK3**	**33UPK4**	**33UPS**	33.75	857	2	0.9
54UP	**54UPK3**	**54UPK4**	**54UPS**	53.8125	1366	3	1.4
63UP	**63UPK3**	**63UPK4**	**63UPS**	61.8125	1570	3.5	1.6
-	**70UPK3**	**70UPK4**	**-**	69.75	1771	3.75	1.7
74UP	**74UPK3**	**74UPK4**	**74UPS**	73.875	1876	4	1.8
86UP	**86UPK3**	**86UPK4**	**86UPS**	85.875	2181	4.5	2.0

Post for Stem Caster

Special Length Posts

Cut posts are available. Consult your Metro representative for more information.

Staked Posts (For use with Truck Dollies)

- Each post connects to the truck dolly through the stem receptacle. The stem receptacle is staked into the bottom of the post to ensure a durable connection in abusive mobile applications. Each includes a leveling/connecting bolt.

Cat. No. Chrome	Cat. No. Stainless Steel	Actual Height (in.)	Actual Height (mm)	Approx. Pkd. Wt. (lbs.)	Approx. Pkd. Wt. (kg)
54P-STKD	**54PS-STKD**	54.4375	1382	3	1.4
63P-STKD	**63PS-STKD**	62.4375	1585	3.5	1.6
74P-STKD	**74PS-STKD**	74.5	1892	4	1.8

Staked Post

Swaged Posts (For use with Stem Casters in Cart Wash Applications)

- Each post has an aluminum cap swaged into the top of the post.

Cat. No. Stainless Steel	Actual Height (in.)	Actual Height (mm)	Approx. Pkd. Wt. (lbs.)	Approx. Pkd. Wt. (kg)
33UPS-SW	33.75	857	2	.9
54UPS-SW	53.8125	1366	3	1.4
63UPS-SW	61.8125	1570	3.5	1.6

Swaged Post

10.01

Job _____

Super Erecta Shelf®
Wire Shelving

We put space to work.

Super Wide Shelving

- **High-density Storage:** Super Wide shelves have a greater storage area for holding large quantities of supplies, especially large, bulky objects, providing maximum storage in minimum space.
- **Load Capacity (evenly distributed) per shelf:**
  Depths: 30" and 36" (760 and 914mm)
  800 lbs. (363kg) for lengths 48" (1219mm) or shorter.
  600 lbs. (272kg) for lengths 54" (1370mm) or longer.

Cat. No. Chrome	Cat. No. Metroseal Green (K3) with Microban	Cat. No.. Metroseal Gray (K4) with Microban	Cat. No. Stainless Steel	Nominal Width/Length (in.)	Nominal Width/Length (mm)	Approx. Pkd. Wt. (lbs.)	Approx. Pkd. Wt. (kg)
3036NC	**3036NK3**	**3036NK4**	**3036NS**	30x36	760x914	14.2	6.4
3048NC	**3048NK3**	**3048NK4**	**3048NS**	30x48	760x1219	17.7	8.0
3060NC	**3060NK3**	**3060NK4**	**3060NS**	30x60	760x1524	20.2	9.2
3072NC	**3072NK3**	**3072NK4**	**3072NS**	30x72	760x1829	22.7	10.3
3636NC	**3636NK3**	**-**	**3636NS**	36x36	910x914	16.7	7.6
3648NC	**3648NK3**	**-**	**3648NS**	36x48	910x1219	21.6	9.8
3660NC	**3660NK3**	**-**	**3660NS**	36x60	910x1524	26.4	12.0
3672NC	**3672NK3**	**-**	**3672NS**	36x72	910x1829	31.6	14.3

Note: The actual length of the shelves is 1/8" (3.2mm) shorter than the nominal dimension shown. The actual depth of the shelves is 1/8" (3.2mm) greater than the nominal dimension shown.

Foot Plates

- Use to bolt units to the floor, or when a broader, more stable foot is desired. Foot plates also help to protect floors by distributing the point load of the shelving unit across a larger contact point.
- Foot plates (completely tightened) add .125" (3mm) to the specified heights of each stationary post on the table.
  Zinc Cat. No. **9993Z**
  Stainless Steel Cat. No. **9993S**

"S" Hook

- Used to add on shelving units with only two posts required. Order two per shelf level.
  Cat. No. **9995Z**

Super Erecta® Shelf Wire Shelving

We put space to work.

Item # _____

Job _____

Super Erecta Pro®

Durable and Cleanable. The original — reinnovated.

Corrosion resistant shelving constructed of removable polymer open grid shelf mats over a wire shelf frame. Shelf frames and posts have Metroseal epoxy coating over an electroplated substrate. Shelves with polymer mats offer a 15 year limited warranty against corrosion, while posts offer a 12 year warranty against corrosion. Microban® antimicrobial product protection is built into the frames, shelf mats, and posts. Shelf has a rigid four-sided frame with center truss(es). Robust corner provides complete 360° capture of the split sleeves and post for added stability. Stationary units have maximum capacity of 2,000 lbs. (907kg) evenly distributed. Mobile units (with stem casters) offer a maximum total unit load of 900 lbs. (408kg). Units assemble easily — shelves mount on split sleeves along grooved, numbered posts and adjust on 1" (25mm) increments.

- **Prolonged durability:** Polymer shelf mats are corrosion proof and impact resistant. They will not chip, rust, or corrode.
- **Easy to clean:** Removable polymer shelf mats can easily be lifted off the shelf frames for cleaning in sinks or wash/dish machines.
- **Strong and robust:** Steel corners, side and center supports assure a sturdy and stable weight bearing surface.

  Weight capacities for evenly distributed loads:
  800 lbs. (363kg) per shelf for lengths of 24" to 48" (610 to 1220mm)
  600 lbs. (275kg) per shelf for lengths of 54" (1370mm) or longer
  2,000 lbs. (907kg) maximum per stationary unit.
- **Interchangeable:** Super Erecta Pro shelves are compatible on the same shelving units with other Super Erecta shelving options: Super Erecta wire, Super Adjustable Super Erecta, Solid Super Erecta shelves, Dunnage shelves, Cantilever shelves. Super Erecta Pro shelves can be used with Post-Type Wall Mounts, Direct Wall Mounts, SmartWall Wall Mounts, Security Units, Top Track, and qwikTRAK systems.
- **Microban Product Protection:** Microban antimicrobial product protection is built into the shelf mats and the Metroseal 3 epoxy coating to protect the product from bacteria, mold, mildew, and fungus that cause odors and product degradation. Microban protection keeps the product "cleaner between cleanings".
- **Efficient use of storage space:** Shelves can be adjusted at 1" (25mm) increments along the post to maximize the use of available vertical storage space.
- **Open Grid Shelf Mats:** Open grid shelves promote air circulation and light penetration.
- **Fast, Easy Assembly:** Super Erecta Pro units assemble easily in minutes, without tools. SiteSelect posts have numbered grooves and feature unique double grooves every 8" (203mm) to help position the shelves.
- **Warranty against rust and corrosion:** Shelves with polymer shelf mats – 15 years. Posts – 12 years. Shelf mats are constructed of polypropylene and will never rust.

***MICROBAN® and the MICROBAN® symbol are registered trademarks of the Microban Products Company, Huntersville, NC.**

For stem casters, see catalog sheet #11.20

MICROBAN NSF SUPPORTS GOOD HACCP PROCESSES

All Metro Catalog Sheets are available on our website: **www.metro.com**

InterMetro Industries Corporation
North Washington Street, Wilkes-Barre, PA 18705
Product Information. U.S. and Canada: 1.800.992.1776
Outside U.S. and Canada: www.metro.com/contactus

L02-184
Printed in U.S.A. Rev. 9/21

10.80

Job _____

Super Erecta Pro® Shelves

We put space to work.

Standard Shelves

- Part number includes shelf with removable polymer shelf mats and one bag of split sleeves

Nominal Width/Length (in.)	(mm)	Approx Pkd. Wt. (lbs.)	(kg)	Model No. SE Pro Metroseal 3
14x24	355x610	4.5	2.0	**PR1424NK3**
14x30	355x760	6.3	2.9	**PR1430NK3**
14x36	355x914	8.0	3.6	**PR1436NK3**
14x42	355x1060	10.0	4.5	**PR1442NK3**
14x48	355x1219	11.9	5.4	**PR1448NK3**
14x60	355x1524	14.9	6.8	**PR1460NK3**
14x72	355x1829	18.3	8.3	**PR1472NK3**
18x24	457x610	6.0	2.7	**PR1824NK3**
18x30	457x760	7.8	3.5	**PR1830NK3**
18x36	457x914	9.5	4.2	**PR1836NK3**
18x42	457x1060	11.3	5.0	**PR1842NK3**
18x48	457x1219	13.0	5.8	**PR1848NK3**
18x54	457x1372	14.8	6.6	**PR1854NK3**
18x60	457x1524	16.5	7.4	**PR1860NK3**
18x72	457x1829	19.8	8.8	**PR1872NK3**
21x24	530x610	8.0	3.6	**PR2124NK3**
21x30	530x760	9.5	4.2	**PR2130NK3**
21x36	530x914	11.3	5.0	**PR2136NK3**
21x42	530x1060	12.5	5.6	**PR2142NK3**
21x48	530x1219	14.3	6.4	**PR2148NK3**
21x54	530x1372	16.5	7.4	**PR2154NK3**
21x60	530x1524	18.3	8.1	**PR2160NK3**
21x72	530x1829	21.5	9.6	**PR2172NK3**
24x24	610x610	9.5	4.2	**PR2424NK3**
24x30	610x760	11.3	5.0	**PR2430NK3**
24x36	610x914	13.0	5.8	**PR2436NK3**
24x42	610x1060	14.0	6.3	**PR2442NK3**
24x48	610x1219	15.5	6.9	**PR2448NK3**
24x54	610x1372	18.3	8.1	**PR2454NK3**
24x60	610x1524	20.0	8.9	**PR2460NK3**
24x72	610x1829	23.3	10.4	**PR2472NK3**

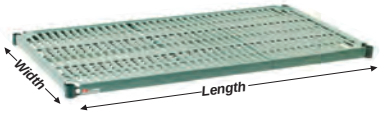

Actual Dimensions: Width: Add 1/4" (6mm) to nominal size. Length: Subtract 1/4" (6mm) from nominal size.

Note: Polymer Shelf mats are designed to fit Super Erecta Pro shelves and cannot be retrofitted to Super Erecta wire shelves.

Replacement Split Sleeves
Model No. 9985 (Bag of four sets.)

Specifications

- **Shelf frames:** Carbon steel with Metroseal 3 epoxy coating.
- **Polymer Shelf mats:** polypropylene.
- **Microban antimicrobial product protection** is built into the polymer shelf mats and Metroseal 3 epoxy coating.
- **NSF listed for all environments.**
- **Continuous Temperature:** Super Erecta Pro Shelves can be used continuously within a range of -20/120° F (-29/49° C). For cleaning only, the unloaded product or shelf mats may be intermittently exposed to temperatures up to 200° F (93° C).

NOTE: Not suitable for cart wash applications.

SHELVING HEIGHT GUIDELINES

Shelf Depth	14î(356mm)	18î(457mm)	21î(533mm)	24î(610mm)
Maxium Post Height Allowable	▼	▼	▼	▼
Stationary	63î(1600mm)	86î(2184mm)	86î(2184mm)	96î(2438mm)
Mobile	54î(1372mm)	74î(1880mm)	74î(1880mm)	86î(2184mm)

Note: 14" deep stationary shelving taller than 63" must be fastened to the floor or wall. For stationary units with foot plates or wall brackets properly attached to the floor or wall, the maximum allowable height is 96" (2438mm). See spec sheet 10.81 for options.

SiteSelect Posts

Stationary post height includes leveling bolt.

STATIONARY

Actual Height (in.)	(mm)	Approx. Pkd. Wt. (lbs.)	(kg)	Model No. Metroseal 3	Model No. Stainless
14 1/2	370	1.0	0.5	**13PK3**	**13PS**
34 1/2	875	2.0	0.9	**33PK3**	**33PS**
54 9/16	1385	3.0	1.4	**54PK3**	**54PS**
62 9/16	1590	3.5	1.6	**63PK3**	**63PS**
—	—	—	—	—	—
74 5/8	1895	4.0	1.8	**74PK3**	**74PS**
86 5/8	2200	5.0	2.3	**86PK3**	**86PS**

MOBILE (For use with stem casters)

Actual Height (in.)	(mm)	Approx. Pkd. Wt. (lbs.)	(kg)	Model No. Metroseal 3	Model No. Stainless
13 3/4	349	1.0	0.5	**13UPK3**	**13UPS**
33 3/4	857	2.0	0.9	**33UPK3**	**33UPS**
53 13/16	1366	3.0	1.4	**54UPK3**	**54UPS**
61 13/16	1570	3.5	1.6	**63UPK3**	**63UPS**
69 3/4	1772	3.8	1.7	**70UPK3**	—
73 7/8	1876	4.0	1.8	**74UPK3**	**74UPS**
85 7/8	2181	5.0	2.3	**86UPK3**	**86UPS**

NOTE: Special length posts are available. Consult your Metro representative.

"S" Hook: Used to "add on" one or multiple Super Erecta Pro shelving units while eliminating the cost of two posts per unit. Can be used to join units end-to-end, back-to-back, at right angles, etc. Two "S" hooks are required for each shelf.
Model No. Q9995Z

Notes about "add-on" units.

- Add-on (Adjacent) units must be configured entirely of one style of shelf. (Example: Adjacent unit may be configured entirely of Super Erecta Pro OR entirely of Super Erecta Wire/Super Adjustable shelves.)
- To connect an adjacent Super Erecta or Super Adjustable Super Erecta wire shelving unit to a Super Erecta Pro unit using S-hooks, the adjacent unit must use S-hook model number Q9995Z.
- A mixed shelving unit having a combination of Super Erecta Pro, Super Erecta wire, and Super Adjustable cannot be connected to another unit with "S" Hooks.

RJS + ASSOCIATES
INTEGRATED FOOD SERVICE DESIGN

ITEM# 7 - DISHWASHER, DOOR TYPE, VENTLESS (1 EA REQ'D)

Hobart AM16VLT-ADV-2

Ventless Dishwashing Machine, tall chamber (27") door type, energy recovery, automatic soil removal (ASR), drain water energy recovery (DWER), high temp sanitizing, 208-240/60/3 (field convertible to single phase), internal condensing system, 38 racks/hour, straight-thru or corner installation, user-friendly smart touchscreen controls, Sense-A-Temp™ booster, electric tank heat, X-shaped wash arms, scrap screen and basket, door actuated start, door lock, stainless steel tank, tank shelf, chamber, trim panels, frame & feet, pumped drain air gap, drain water tempering, cULus, NSF, ENERGY STAR®. Factory Startup - Free for installations within 100 miles of a Hobart Service Office during normal business hours with appropriate notice; installation beyond 100 miles will be quoted by Service.

ACCESSORIES

Mfr	Qty	Model	Spec
Hobart	1		Standard warranty - 1-Year parts, labor & travel time during normal working hours within the USA
Hobart	1	RAPID-FILL1-AM16	Rapid Fill Kit Single Valve – For faster filling, requires separate hot water connection
Hobart	1	WTRHAMARREST-AM16	Water Hammer Arrestor – Assembly includes ¾” brass pressure regulator, pressure gauge, shock arrestor and garden hose adapter
Hobart	1		NOTE: For water of 3-grains of hardness or more, Hobart suggests adding a water softener.

HOBART

Project _____

AIA # _____ SIS # _____

Item # _____ Quantity _____ C.S.I. Section 114000

COMMERCIAL DISHWASHERS

AM16VLT-ADV TALL advansys ELECTRIC

High Temperature Ventless Door-Style Dishwashing Machine

SPECIFIER STATEMENT

Specified unit will be a Hobart AM16 Tall Advansys™ electric high temperature ventless dishwashing machine. Features include drain water energy recovery, automatic soil removal, 3-sided hood, ventless operation and energy recovery, door lock, touchscreen controls with WiFi connectivity, NSF pot and pan rating for 2-, 4- & 6-minute cycles, 27" door opening, pumped drain, auto door start with auto fill, interchangeable stainless steel rinse arms and X-shaped wash arms, auto delime, advanced diagnostics and service connection, up to 36 racks per hour, .67 U.S. gallons per rack pumped final rinse.

1 year parts and labor warranty.

STANDARD FEATURES

- .67 gallons per rack pumped final rinse
- 36 racks per hour – hot water sanitizing
- Drain water energy recovery (DWER)
- Automatic soil removal (ASR)
- Ventless energy recovery
- Pillarless opening
- 3-sided hood
- User-friendly smart touchscreen controls
- Single point electrical connection standard, field convertible to dual point connection
- 3 phase standard, field convertible to single phase
- WiFi connectivity
- SmartConnect app and cloud with machine status, temperature logs, error code reporting, and cost, consumption and usage analysis
- Temperature and chemical lock outs (with Hobart equipped chemical pumps)
- Pumped drain
- Door lock
- Timed wash cycles for 1, 2, 4 or 6 minutes
- NSF pot and pan rating for 2-, 4- & 6- minute cycles
- Sense-A-Temp™ 70°F rise electric booster heater
- Self-draining, high efficiency wash pump with stainless steel impeller
- 27" door opening for 18" x 26" sheet pans or 60-quart mixing bowl
- Stainless steel drawn tank, tank shelf, chamber, trim panels, frame and feet
- Spring counterbalanced chamber with UHMW guides
- X- shaped revolving, interchangeable upper and lower anticlogging wash arms
- Revolving, interchangeable upper and lower rinse arms
- Slanted, self-locating, one-piece scrap screen and basket system
- Automatic fill
- Door actuated start
- AutoClean
- Drain water tempering kit
- Factory startup
- Service diagnostics
- Straight-through or corner installation
- Auto delime
- Sheet pan rack

OPTIONS & ACCESSORIES (Available at extra cost)

- ❑ Peg, combination and wine rack
- ❑ ASR left-hand conversion kit
- ❑ Chemical pumps
- ❑ Splash shield for corner installations
- ❑ Flanged and seismic feet
- ❑ Water hammer arrestor kit
- ❑ Rapid fill kit
- ❑ Prison package
- ❑ Marine package

AM16 SERIES – AM16VLT-ADV TALL advansys ELECTRIC

Approved by _____ Date _____ Approved by _____ Date _____

HOBART

AM16VLT-ADV TALL advansys ELECTRIC

High Temperature Ventless Door-Style Dishwashing Machine

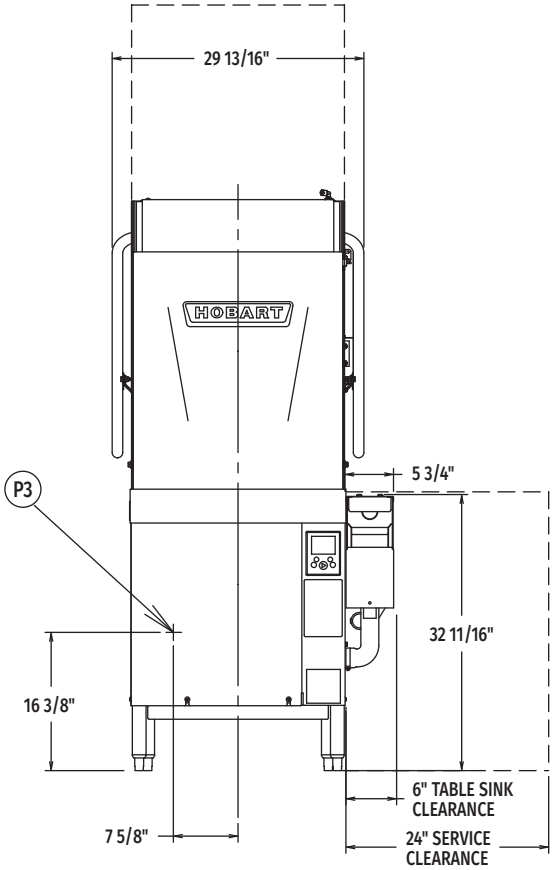

Front View

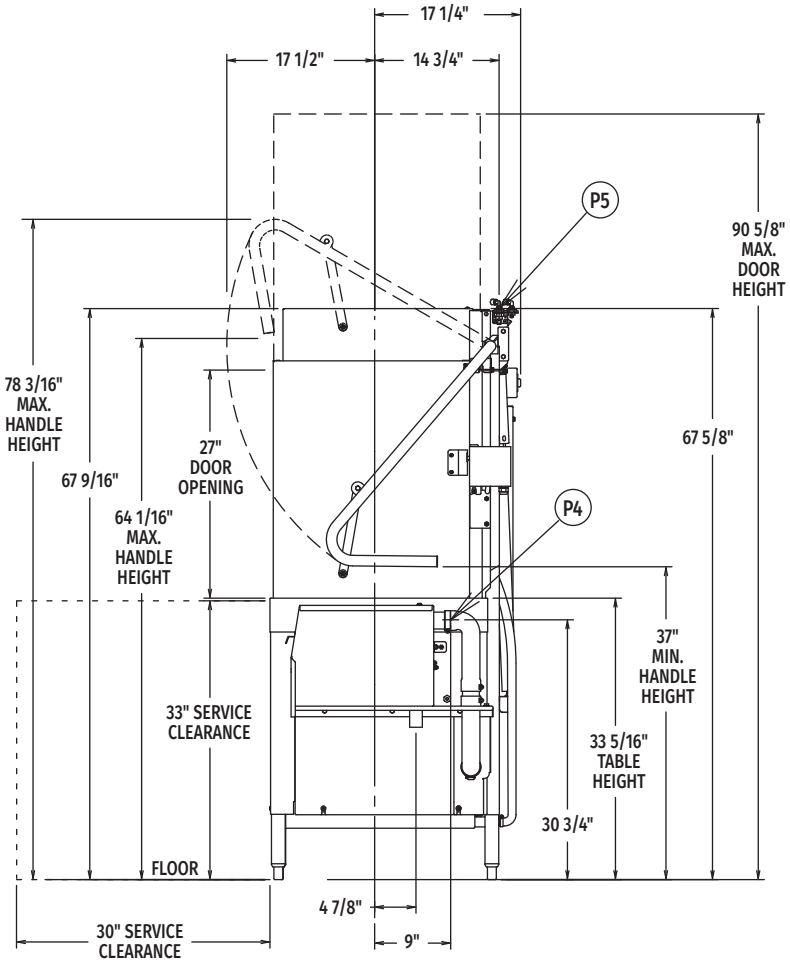

Right Side View

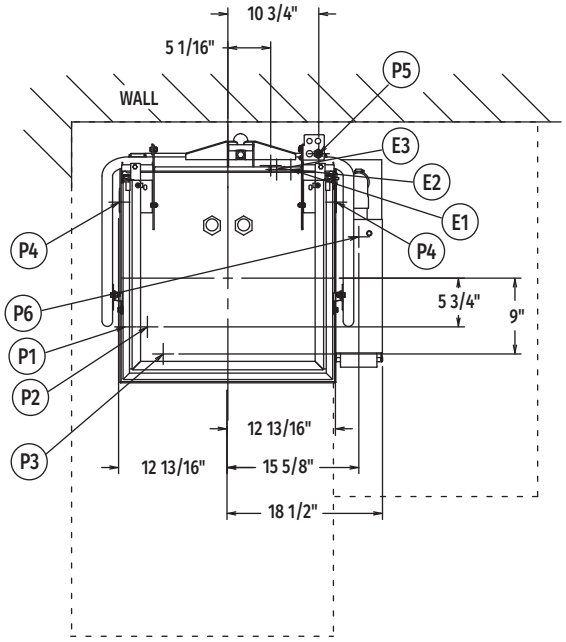

Top View

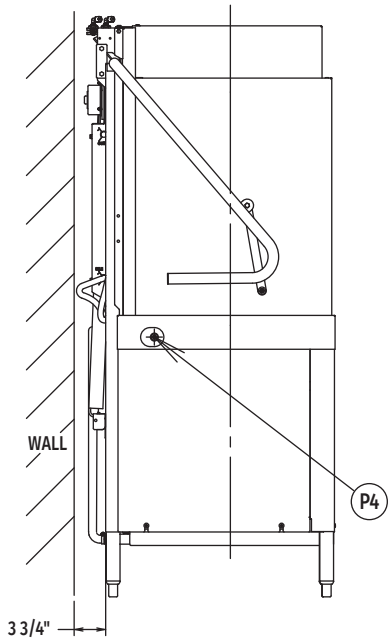

Left Side View

MODEL:
AM16VLT-ADV
E-950440

AM16VLT-ADV TALL advansys ELECTRIC

High Temperature Ventless Door-Style Dishwashing Machine

WARNING: Plumbing and electrical connections should be made by qualified personnel who will observe all the applicable plumbing, sanitary, safety codes and National Electrical Code.

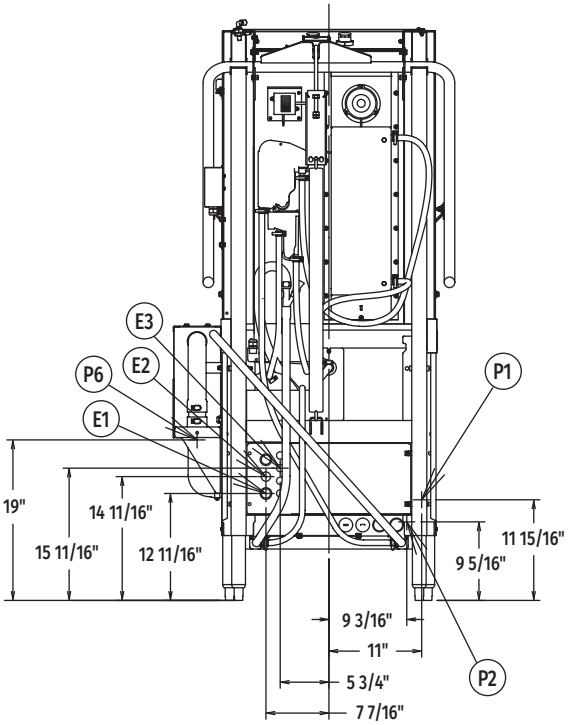

Rear View

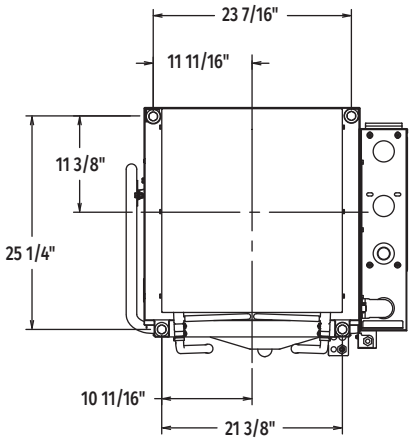

Bottom View

LEGEND

Electrical Connections	
E1	Electrical connection: wash pump motor & sump heater, 1" or 3/4" conduit hole; 12-11/16" AFF.
E2	Electrical connection: electric booster & controls only or single point electrical connection (3PH only), 1" or 3/4" conduit hole; 14-11/16" AFF.
E3	Electrical connection: detergent & rinse agent feeders, (DPS1 & DPS2) 1.5 amps @ nameplate supply voltage, (RPS1 & RPS2) 1.5 amps @ nameplate supply voltage; 1/2" conduit hole, 15-11/16" AFF.
Plumbing Connections	
P1	Common water connection including booster heater: 55°F water minimum; 15-65 psi recommended; 3/4" female garden hose fitting on 6' long hose supplied with machine; 11-15/16" AFF.
P2	Optional – hot water connection: 110°F water minimum (rapid fill accessory - when ordered); 3/4" female garden hose fitting on 6' long hose 9-5/16" AFF.
P3	Detergent probe sensor: remove cap and stud assembly to access 7/8" hole; 16-3/8" AFF.
P4	Detergent feeder: two locations available. Remove cap and stud assembly to access 7/8" hole; 30-3/4" AFF.
P5	Rinse agent feeder: remove 1/8" NPT pipe plug to access 1/8" NPT tapped hole; 67-5/8" AFF.
P6	Drain connection: includes machine drain & drain water tempering (LH ASR accessory drain location on opposite side), 1-1/2" stainless steel tube fitting 19" AFF.

SPECIFICATIONS

Capacities

Racks Per Hour (maximum) 36
Dishes per Hour (average 25 per rack) 950
Glasses per Hour (average 45 per rack) 1,710
Wash Tank (U.S. gallons) 10.5

Motor Horsepower

Rinse Pump 0.18
Wash Pump 2
ASR Pump 0.18
Drain Pump 0.21
Blower 0.05

Rinse

Gallons per Rack 0.67
Gallons per Hour (maximum consumption) 24.12

Peak Rate of Drain Flow

Gallons per Minute (initial rate with full tank) 18.5

Heating

Electric Booster (kW) 7.1
Electric Heating Unit (kW) 5.4

Shipping Weight (approximate) . . . . . 427 lbs.

Crated Dimensions . . . . . 73.75"H x 36.5"W x 36.5"L

AM16VLT-ADV TALL advansys ELECTRIC

High Temperature Ventless Door-Style Dishwashing Machine

E1	AM16 with Electric Heat (When Field Converted to Dual Point)		
Voltage	Rated Amps	Minimum Supply Circuit Ampacity	Maximum Protective Device
208-240/60/1	39.6	50	50
208-240/60/3	26.9	30	30

E2	9.5 kW Booster & Controls (When Field Converted to Dual Point)		
Voltage	Rated Amps	Minimum Supply Circuit Ampacity	Maximum Protective Device
208-240/60/1	43.3	50	50
208-240/60/3	26.6	30	30

E2	AM16 Single Point Electrical Service Connection as Shown Below		
Voltage	Rated Amps	Minimum Supply Circuit Ampacity	Maximum Protective Device
208-240/60/3	53.5	60	60

Approximate Heat Gain to Space without Vent Hood	
Type	BTU/Hr.
Latent	5,100
Sensible	5,300

Miscellaneous Notes: All dimensions taken from floor line may increase 7/8" or decrease 3/8" depending on leg adjustment.

Vent hood (if required) to provide a minimum 450 CFM exhaust (ref installation instructions).

Net weight of machine including booster: 410 lbs.
Domestic shipping weight including booster: 430 lbs.

Size of racks – 19¾" x 19¾".

Plumbing Notes: Water hammer arrestor (meeting ASSE-1010 standard or equivalent) to be supplied (by others) in common water supply line at service connection.

Recommended water hardness to be 3 grains or less for best results.

Recommended building flowing water pressure to the dishwasher at or above 20 PSI. Pressures lower than 20 PSI may affect machine fill/start-up times.

This is a pumped rinse machine. Pressure regulating valve is not necessary on hot or cold lines.

For convenience when cleaning, water tap should be installed near machine with heavy duty hose and squeeze valve.

AM16VLT-ADV TABLING CONFIGURATIONS AND TRACK DESIGN

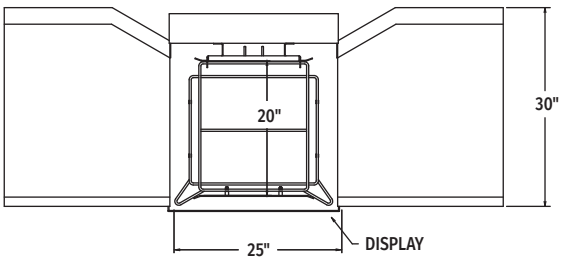

Pass Thru Installation

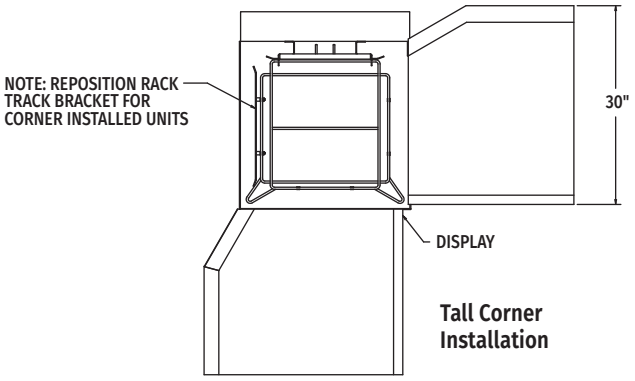

Tall Corner Installation

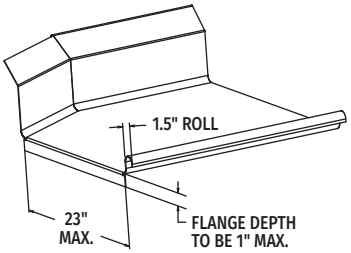

Suggested Table Design

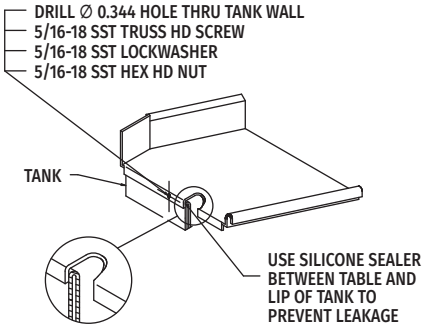

As continued product improvement is a policy of Hobart, specifications are subject to change without notice.

RJS + ASSOCIATES
INTEGRATED FOOD SERVICE DESIGN

ITEM# 8 - CLEAN DISHTABLE (1 EA REQ'D)

Advance Tabco DTC-S70-36L

Dishtable, clean, straight design, attaches to left of dish machine operator, 10-1/2"H backsplash, 3" rolled front & side rims, stainless steel legs, with crossrails, 35"W x 30"D x 34"H, 16/304 stainless steel

ACCESSORIES

Mfr	Qty	Model	Spec
Advance Tabco	1		SPECIFY DISH MACHINE BRAND & MODEL to ensure proper fit, refer to attached document (AQ only) or consult www.advancetabco.com for compatibility listing. Certain dish machines require modifications at additional cost not shown here

ADVANCE TABCO®
SMART FABRICATION™

STAINLESS STEEL

DISHTABLES
CLEAN STRAIGHT

NEW ***Tile Edge Design*** NSF

Item #: _____ ***Qty #:*** _____
Model #: _____
Project #: _____

DTC-S60-60R Shown
Optional Undershelf Shown

Spec-Line: 14 ga. 304 Series Stainless Steel Top.
16 ga. 304 Stainless Steel Legs Stainless Steel Legs with Welded Cross Bracing & Stainless Steel Bullet Feet.

UPGRADED! **Standard:** 16 ga. 304 Series Stainless Steel Top.
16 ga. 304 Stainless Steel Legs Stainless Steel Legs with Welded Cross Bracing & Stainless Steel Bullet Feet.

Super Saver: 16 ga. 304 Series Stainless Steel Top.
Galvanized Legs with Plastic Bullet Feet.

Optional Stainless Steel UNDERSHELF Die Cast LEG CLAMP
secured to shelf eliminates unsightly nuts & bolts

10-1/2"" EXTRA LARGE Bold Looking Backsplash with 2" return and tile edge

FEATURES:
Tile edge for ease of installation.
Dishtable system consists of SOIL and CLEAN sections.
Table is furnished with 10-1/2" splash with a 2" return.

CONSTRUCTION:
All TIG welded.
Welded areas blended to match adjacent surfaces and to a satin finish.
Stainless Steel Gussets welded to a stainless steel support channel.

ACCESSORIES	Model #	Qty
Faucet		
Wall Shelf		
Undershelf		

Nominal sizing on all dishtables for ease of installation.

		14 Gauge 304 16 Ga. Stainless Steel Legs	16 Gauge 304 Stainless Steel Legs	16 Gauge 304 Galvanized Legs	
Nominal Size	**"L"**	**SPEC-LINE**	**STANDARD**	**SUPER SAVER**	**Approx. Wt.**
2 Ft.	23"	**DTC-S30-24L or R**	**DTC-S70-24L or R**	**DTC-S60-24L or R**	35 lbs.
3 Ft.	35"	**DTC-S30-36L or R**	**DTC-S70-36L or R**	**DTC-S60-36L or R**	45 lbs.
4 Ft.	47"	**DTC-S30-48L or R**	**DTC-S70-48L or R**	**DTC-S60-48L or R**	60 lbs.
5 Ft.	59"	**DTC-S30-60L or R**	**DTC-S70-60L or R**	**DTC-S60-60L or R**	70 lbs.
6 Ft.	71"	**DTC-S30-72L or R**	**DTC-S70-72L or R**	**DTC-S60-72L or R**	85 lbs.
7 Ft.	83"	**DTC-S30-84L or R**	**DTC-S70-84L or R**	**DTC-S60-84L or R**	100 lbs.
8 Ft.	95"	**DTC-S30-96L or R**	**DTC-S70-96L or R**	**DTC-S60-96L or R**	110 lbs.
9 FT.	107"	**DTC-S30-108L or R**	**DTC-S70-108L or R**	**DTC-S60-108L or R**	225 lbs.
10 Ft.	119"	**DTC-S30-120L or R**	**DTC-S70-120L or R**	**DTC-S60-120L or R**	250 lbs.
12 Ft.	143"	**DTC-S30-144L or R**	**DTC-S70-144L or R**	**DTC-S60-144L or R**	260 lbs.

ADVANCE TABCO®
SMART FABRICATION™
www.advancetabco.com

Customer Service Available To Assist You 1-800-645-3166 8:30 am - 8:00 pm E.S.T.
Email Orders To: customer@advancetabco.com. For Smart Fabrication™ Quotes, Email To: smartfab@advancetabco.com or Fax To: 631-586-2933

NEW YORK Fax: (631) 242-6900
GEORGIA Fax: (770) 775-5625
TEXAS Fax: (972) 932-4795
NEVADA Fax: (775) 972-1578

DIMENSIONS and SPECIFICATIONS

TOL ± .500”

ALL DIMENSIONS ARE TYPICAL

SEE DISH MACHINE COMPATIBILITY CHART TO ENSURE PROPER FIT

Dish Machine Compatibility Chart can be found on our website at www.advancetabco.com under “Product Support”

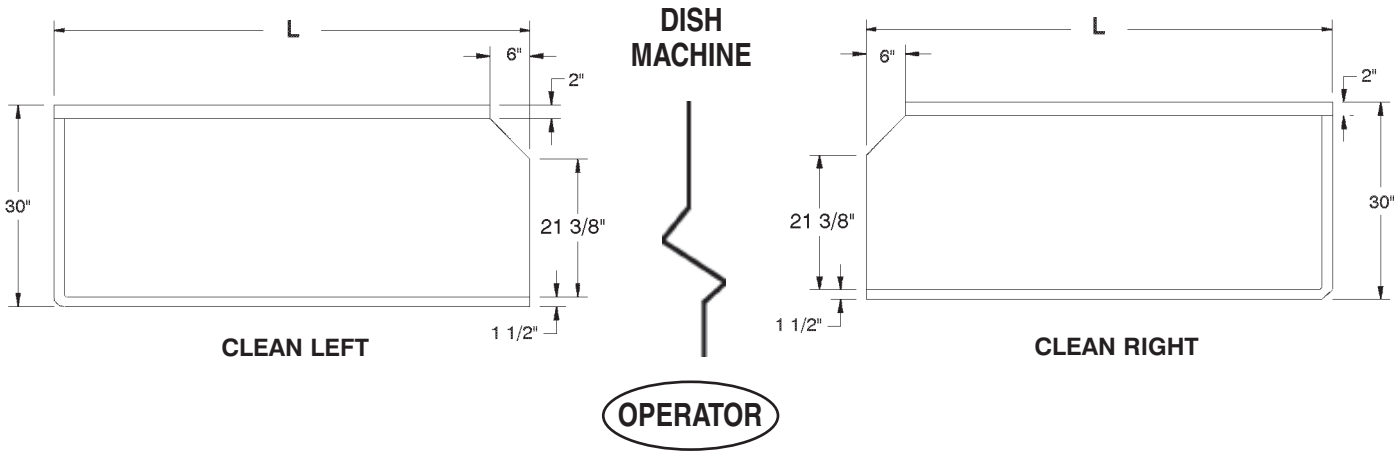

SPEC-LINE & STANDARD	SUPER SAVER
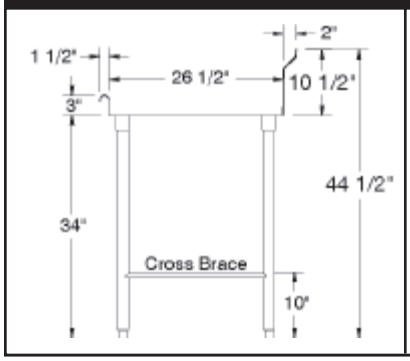	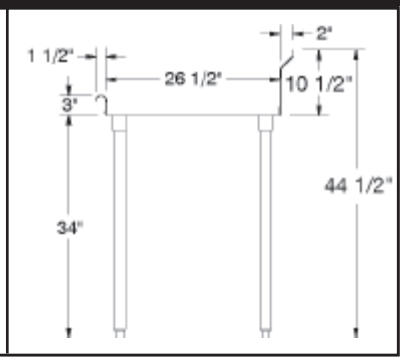

CUSTOMIZE YOUR OWN SYSTEM
by Ordering Optional Accessories from our
PRODUCT & PRICE GUIDE

Splash Detail

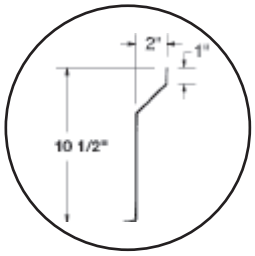

Description	SPEC-LINE	STANDARD	SUPER SAVER
Material	**14 Ga. 304 Series**	**16 Ga. 304 Series**	**16 Ga. 304 Series**
1 5/8” Dia. Legs	Stainless Steel	Stainless Steel	Galvanized
Gussets	Stainless Steel	Stainless Steel	Stainless Steel
Bullet Feet (1” adj.)	Stainless Steel	Stainless Steel	Plastic
Cross Bracing	Welded	Welded	Optional

ADVANCE TABCO
SMART FABRICATION™

ADVANCE TABCO is constantly engaged in a program of improving our products. Therefore, we reserve the right to change specifications without prior notice.

200 Heartland Boulevard, Edgewood, NY 11717-8380

RJS + ASSOCIATES
INTEGRATED FOOD SERVICE DESIGN

ITEM# 9 - HAND SINK (1 EA REQ'D)

Advance Tabco 7-PS-61

Hand Sink, wall mounted, 14" wide x 10" front-to-back x 5" deep bowl, 20 gauge 304 stainless steel, electronic faucet (battery & 110v options both supplied), basket drain, wall bracket, NSF, cCSAus

ACCESSORIES

Mfr	Qty	Model	Spec
Advance Tabco	1	K-425	Thermostatic Mixing Valve, for knee pedal, foot pedal and electronic hand sinks and valves

ADVANCE TABCO
SMART FABRICATION™

STAINLESS STEEL

HAND SINKS

ELECTRONIC OPERATED FAUCETS

Conforms To NSF 61/9 Lead Free Requirements

7-PS-53

7-PS-51

7-PS-61

7-PS-81

7-PS-91

TOUCHLESS SOAP DISPENSER

7-PS-131

Item #: _____ **Qty #:** _____

Model #: _____

Project #: _____

FEATURES:

One piece **Deep Drawn** sink bowl design.

Sink bowl is 10"x14"x5" (Excludes 7-PS-53. Unit has 9"x9"x5" bowl).

"Hands Free" Electronic Faucet makes use of infrared technology to sense the user's presence and immediately turn on water supply that is pre-mixed to desired temp.

Electronic gooseneck faucet is splash mounted and comes complete with AC/DC control module, sensor, 4 "AA" batteries and spout.

All sink bowls have a large liberal radii with a minimum dimension of 2" and are rectangular in design for increased capacity.

Stainless steel basket drain 1 1/2" IPS.

Additional Features:

7-PS-51 & 7-PS-81 lever operated drain and built-in overflow with plastic overflow tube and spring clamps. P-Trap is 1 1/2". Splash mounted soap dispenser.

7-PS-81 towel dispenser with hinged towel box. Unit uses standard C-fold towels. Liquid Soap dispenser.

7-PS-91 pedestal skirt.

7-PS-131 K-175 electronic faucet, splash mount touchless liquid soap dispenser. 7-3/4" Side Splashes.

CONSTRUCTION:

All TIG welded.

Welded areas blended to match adjacent surfaces & to a satin finish.

Die formed Countertop Edge with a 3/8" No-Drip offset.

One sheet of stainless steel - No Seams.

MATERIAL:

Heavy gauge type 304 series stainless steel.

Electronic Faucet solid brass, chrome plated.

Wall mounting bracket is stainless steel and of offset design.

All fittings are brass / chrome plated unless otherwise indicated.

MECHANICAL:

Electronic faucet is 1/2" male IPS thread.

K-175 Replacement Electronic Operated Faucet.

Faucet Flow Rate: 2.2 GPM/8.3 LPM aerator. 60 PSI.

7-PS-104

HANDS-FREE TOUCHLESS SOAP DISPENSER UPGRADE

- Wall Mounted
- A/C or Battery Powered (Requires 4 "AA" Batteries. Not Included)
- Low Soap Indicator Window
- Includes Wall Bracket & Hardware
- Uses Liquid Soap (Excludes 7-PS-131)

CLICK HERE TO VIEW SPEC SHEET

WARNING: Equipment that includes a faucet may expose you to chemicals, including lead, that are known to the State of California to cause cancer or birth defects or other reproductive harm. For more Info.,visit www.p65warnings.ca.gov.

ADVANCE TABCO
SMART FABRICATION™
www.advancetabco.com

Customer Service Available To Assist You 1-800-645-3166 8:30 am - 7:00 pm E.S.T.

For Orders & Customer Service:
Email: customer@advancetabco.com or Fax: 631-242-6900

For Smart Fabrication™ Quotes:
Email: smartfab@advancetabco.com or Fax: 631-586-2933

REF-B

DIMENSIONS and SPECIFICATIONS

TOL Overall: ± .500" Interior: ± .250" **FITTINGS SUPPLIED AS SHOWN** **ALL DIMENSIONS ARE TYPICAL**

7-PS-51

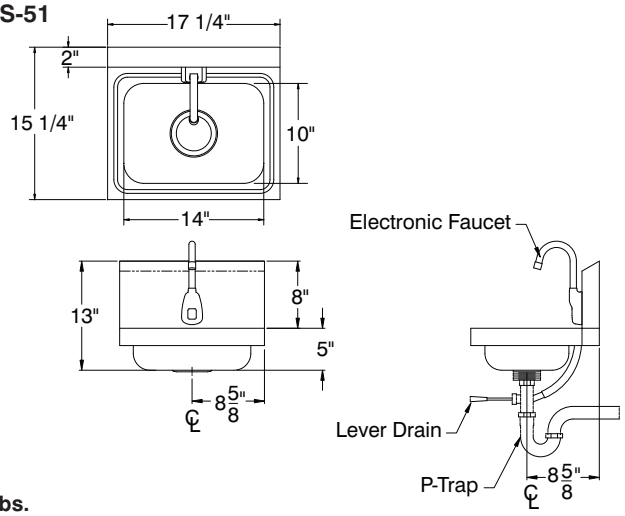

21 lbs.

7-PS-61

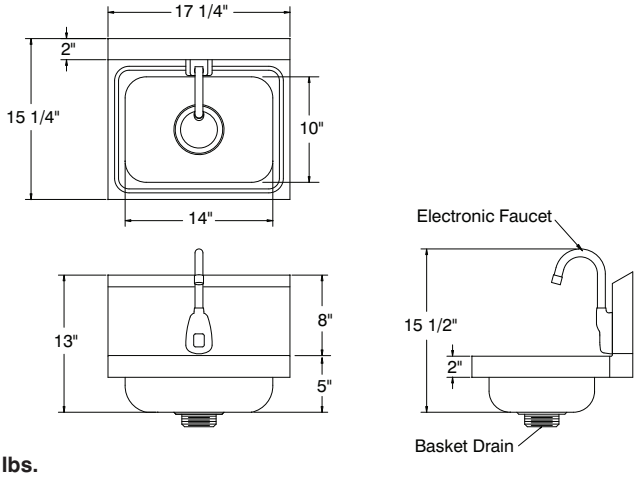

19 lbs.

7-PS-53

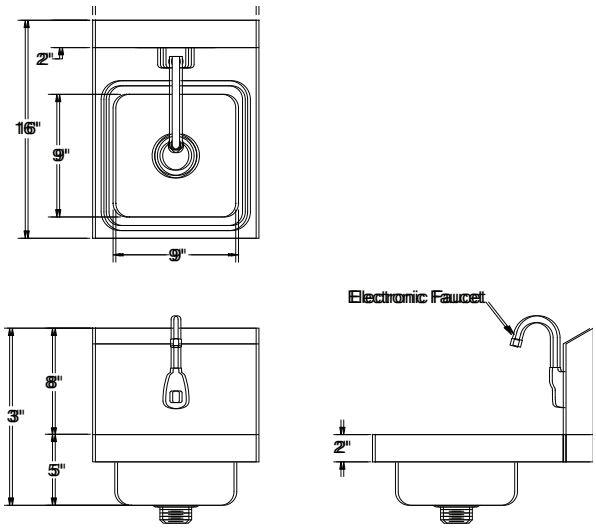

12 lbs.

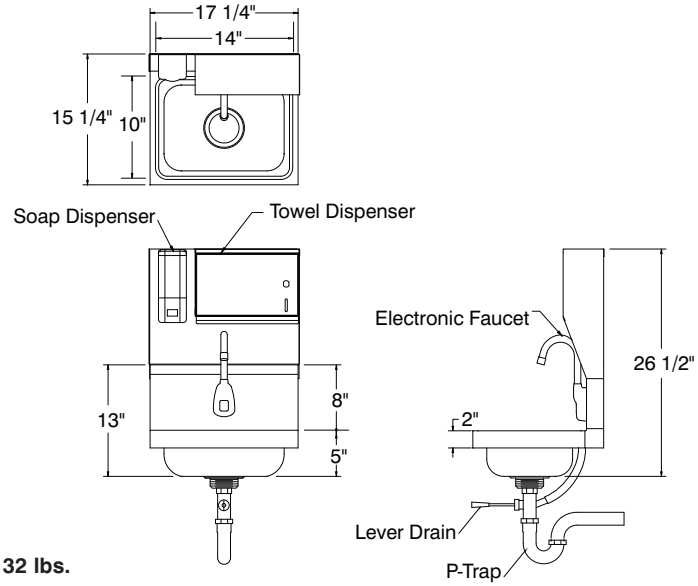

32 lbs.

7-PS-91

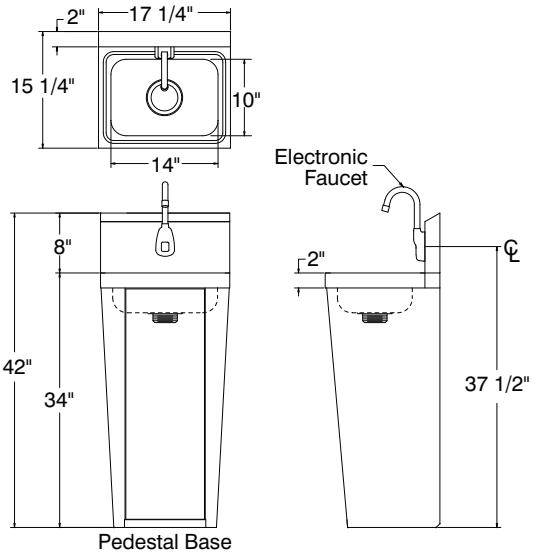

41 lbs.

7-PS-131

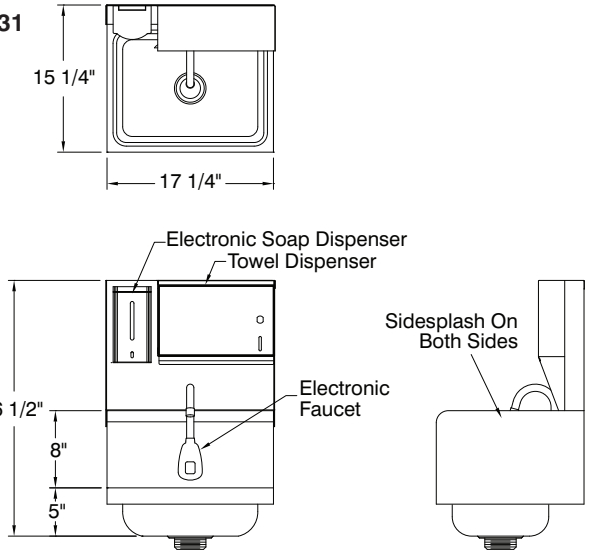

30 lbs.

ADVANCE TABCO
SMART FABRICATION™

REF-B 325 Wireless Boulevard, Hauppauge, NY 11788

ADVANCE TABCO is constantly engaged in a program of improving our products. Therefore, we reserve the right to change specifications without prior notice.

FAUCET PARTS & ACCESSORIES

Faucet Repair Kit
For K-22, K-59, K-123, K-125, K-126, K-206 & K-316 Faucets
Includes 2 Cartridges and Handles

*Can Only Be Used On Faucets Purchased After January 2016. For Older Faucets, Consult Customer Service.

K-00A (Set of 2)

Faucet Repair Kit
For K-1, K-11, K-50, K-51, K-52, K-53, K-56, K-124, K-101, K-160, K-208 & K-240 Faucets
Includes 2 Cartridges and Handles

*Can Only Be Used On Faucets Purchased After January 2016. For Older Faucets, Consult Customer Service.

K-00B (Set of 2)

Service Faucet Vacuum Breaker Repair Kit
For K-240 Faucet

*Can Only Be Used On Faucets Purchased After January 2016. For Older Faucets, Consult Customer Service.

K-03

K-02 Filler Faucet Repair Kit
For K-54 & K-54A Faucets

*Can Only Be Used On Faucets Purchased From 2016 - 2019. For Older Faucets, See Below.

K-02A Filler Faucet Repair Kit
For K-54 & K-54A Faucets

*Can Only Be Used On Faucets Purchased Before January 2016 or After 2019.

Pedal/Knee Valve Replacement Parts

Replacement Bonnet for Pedal/Knee Valve
For K-103, K-104, 7-PS-32 & 7-PS-39

K-01

Replacement Check Valves
For K-103, K-104, 7-PS-32 & 7-PS-39

K-19

Thermostatic Mixing Valve
For K-103, K-104, 7-PS-32 & 7-PS-39

K-425

Mixing Valve & Retainer
For K-103, K-104, 7-PS-32 & 7-PS-39

K-19A

Faucet Options & Accessories

Hands-Free Wand

K-400

Low Flow Aerator

.5 GPM

K-08

Wrist Handles (Pair)

*Can Only Be Used On Faucets Purchased After January 2016. For Older Faucets, Consult Customer Service.

K-316-LU

Wrist Handles (Pair)
For Heavy Duty 8" O.C. Faucets

K-416-LU

Splash Mount Faucet Mounting Kit
K-1, K-11, K-101, K-105, K-112, K-119 & K-211

K-06

Faucet Wall Mounting Bracket
8" O.C.

K-30

ADVANCE TABCO SMART FABRICATION™
www.advancetabco.com

Customer Service Available To Assist You 1-800-645-3166 8:30 am - 7:00 pm E.S.T.

For Orders & Customer Service:
Email: customer@advancetabco.com or **Fax:** 631-242-6900

For Smart Fabrication™ Quotes:
Email: smartfab@advancetabco.com or **Fax:** 631-586-2933

 REF-G

RJS + ASSOCIATES
INTEGRATED FOOD SERVICE DESIGN

ITEM# 9A - PAPER TOWEL DISPENSER (1 EA REQ'D)
ByVen BY VENDOR
Paper Towel Dispenser as required by Owner/Vendor
<By Vendor>

Georgia-Pacific Professional
133 Peachtree NE Atlanta, GA 30303
1-866-HELLO GP (435-5647) | www.gppro.com

enMotion® Wall Mount Automated Touchless Towel Dispenser

Using technology to improve hygiene, enhance image, and control costs.

Item Description:

Finally, a reliable and affordable automated touchless towel dispenser. enMotion® high-capacity towel system helps reduce the number of service visits and dispenses a single towel by putting your hand in motion. Powered by four long-lasting standard D-cell batteries providing for easy and low maintenance requirements, this next generation of automated, touchless dispensing provides a cleaner, more hygienic environment, significantly lower waste and reduced maintenance. enMotion is a sleek solution to an age-old problem. *Only available via one time, lifetime, Lease Agreement with GP or authorized distributor.

Features & Benefits:

- *Automatic, touch free or touch-free dispensing prevents cross-contamination for a more hygienic washroom*
- *Perfect for washrooms or installation above food prep or kitchen sinks.*
- *Adjustable settings for sheet length, time delay, sensor range and dispensing mode controls usage and increases operational efficiency*
- *High tech functionality, sleek styling and quality toweling make positive statements about your facility*
- *High-capacity system and paper transfer mechanism provide continuous service while reducing maintenance costs*
- *Multiple power options - 4 Standard D-Cell batteries (included) or optional AC power adapter*

Product Details

Brand Owner	**Georgia-Pacific**
Brand	**enMotion®**
MFG Item#	**59460**
Design	**Splash Blue**
UPC UCC-12	**073310594606**
Each Per Ship Unit	**1 Each**
Items Per Each	**0 Each**
Case Total	**1 Each**
Dispenser (WxDxH)	**14.800" x 9.750" x 16.750"**
UNSPSC	**47131701**
LEED	**LEED INNOVATION 1.1-1.4, 3**
Order Multiple	**1 EA**

Case Shipping Info

GTIN	**10073310594603**
Case Gross Weight	**11.880 lbs**
Case Net Weight	**7.400 lbs**
Case Dimensions	**15.160" x 11.810" x 19.290"**
Case Volume	**1.960 CFT**

Unit Shipping Info

Ti-Qty/Layer	**6**
High-Layers/Unit	**8**
Unit Qty	**48**
Unit Dimensions	**45.380" x 37.750" x 95.000"**

0 73310 59460 6

printed on 12/9/2008

RJS + ASSOCIATES
INTEGRATED FOOD SERVICE DESIGN

ITEM# 9B - SOAP DISPENSER (1 EA REQ'D)
ByVen BY VENDOR
Soap Dispenser as required by Owner/Vendor
<By Vendor>

SLOAN®

SJS-1000

MANUAL WALL-MOUNT LIQUID SOAP DISPENSER

The SJS-1000 manual soap dispenser uses a bag-type refill that simplifies replacement and reduces waste.

This manual dispenser delivers a pre-measured amount of liquid soap per application – giving approximately 1000 uses per refill. The sight glass indicates low soap level.

- Pre-measured soap per use
- Push-style dispensing mechanism
- Easy-to-use bag refills, no contamination
- Attaches to any wall in minutes

Product Number: **SJS-1000**
Product Code: **7000000**
Color: Chrome and black
Size: W 5.31″ x D 4.41″ x H 10.04″ (W 135 mm x D 112 mm x H 255 mm)
Quantity/pack: 1
Quantity/case: 6

Refills:

Product No.	Description	Order No.
SJS-1001	Manual Wall-Mount Liquid Soap	0700200
SJS-1001-1	Manual Wall-Mount Liquid Soap with Moisturizers	0700201
SJS-1001-2	Manual Wall-Mount Liquid Soap Antimicrobial	0700202

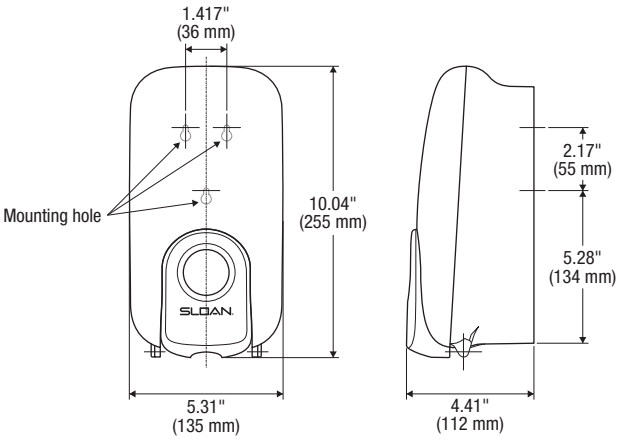

The information contained in this document is subject to change without notice.

SLOAN®

Sloan HEALTHMINDER™ Products and Service
10500 Seymour Avenue
Franklin Park, IL 60131-1259
Phone: 877-652-6726
Fax: 800-447-8329
www.sloanvalve.com

Printed in the U.S.A. JSD6002.2 1/08

RJS + ASSOCIATES
INTEGRATED FOOD SERVICE DESIGN

ITEM# 9C - TRASH RECEPTACLE, INDOOR (1 EA REQ'D)

Rubbermaid FG354060GRAY

Slim Jim® Container, 23 gallon, 22"W x 11"D x 30"H, with venting channels, molded-in handles, general purpose waste, open type without lid, high-impact plastic construction, gray, Made in USA

<By Vendor>

SLIM JIM® CONTAINERS

The Slim Jim® container delivers the durability needed for commercial environments combined with brand new innovation to increase worker productivity. New product features and accessories deliver the most efficient solution for collection, transportation, and disposal of multi-stream waste and recyclables.

Features and Benefits:

- Venting channels make removing liners up to 80% easier, improving productivity and reducing the risk of worker injury
- Four bag cinches secure liners around the rim of the container and allow for quick, knot-free liner changes
- Handles at the base and rim of the container improve grip and control while lifting and emptying full containers
- Rim with rib-strengthened design increases strength and resists crushing
- Build a recycling station with a variety of dolly and lid options to meet any facility need

COLORS AVAILABLE

Blue, Green, Black, Beige, Brown, Gray, Yellow*, Red*

* 23-gallon only

Material Composition:

Injection molded with a high-quality resin blend.

Accessories:

STAINLESS STEEL DOLLIES

- Slim Jim® Single Dolly
- Slim Jim® Double Dolly
- Slim Jim® Triple Dolly
- Slim Jim® Quadruple Dolly

RESIN DOLLY

- Slim Jim® Trainable Dolly

LIDS

- Bottles and Cans Lid
- Paper Lid
- Mixed Recycling Lid
- Hinged Lid
- Swing Lid

23-Gallon Slim Jim® Container

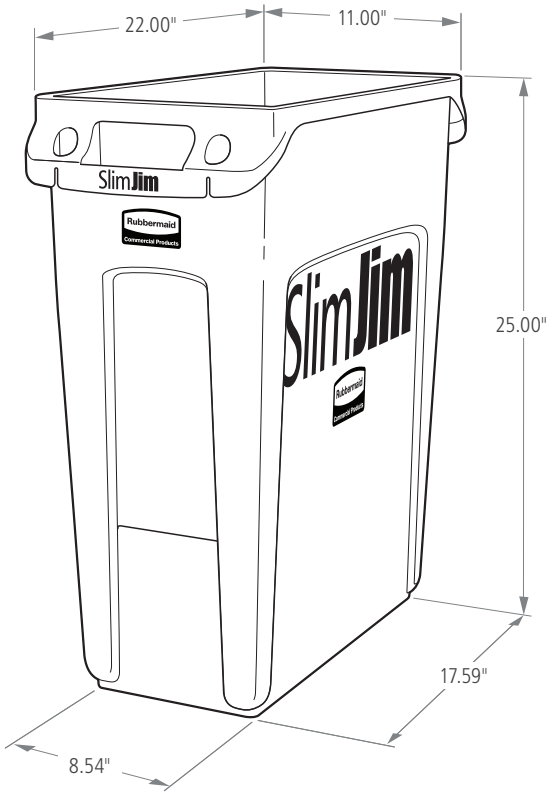

16-Gallon Slim Jim® Container

SLIM JIM® CONTAINERS

SKU #	DESCRIPTION	COLOR	CAPACITY		LENGTH		WIDTH		HEIGHT		PACK SIZE
			GAL	L	IN	CM	IN	CM	IN	CM	
1971258	SLIM JIM® CONTAINER	GRAY	16	61	22"	55.88	11"	27.94	25"	63.50	4
1955959	SLIM JIM® CONTAINER	BLACK	16	61	22"	55.88	11"	27.94	25"	63.50	4
1971259	SLIM JIM® CONTAINER	BEIGE	16	61	22"	55.88	11"	27.94	25"	63.50	4
1956181	SLIM JIM® CONTAINER	BROWN	16	61	22"	55.88	11"	27.94	25"	63.50	4
1971257	SLIM JIM® CONTAINER	BLUE	16	61	22"	55.88	11"	27.94	25"	63.50	4
1955960	SLIM JIM® CONTAINER	GREEN	16	61	22"	55.88	11"	27.94	25"	63.50	4
FG354060GRAY	SLIM JIM® CONTAINER	GRAY	23	87	22"	55.88	11"	27.94	30"	76.20	4
FG354060BLA	SLIM JIM® CONTAINER	BLACK	23	87	22"	55.88	11"	27.94	30"	76.20	4
FG354060BEIG	SLIM JIM® CONTAINER	BEIGE	23	87	22"	55.88	11"	27.94	30"	76.20	4
1956187	SLIM JIM® CONTAINER	BROWN	23	87	22"	55.88	11"	27.94	30"	76.20	4
1956185	SLIM JIM® CONTAINER	BLUE	23	87	22"	55.88	11"	27.94	30"	76.20	4
1956186	SLIM JIM® CONTAINER	GREEN	23	87	22"	55.88	11"	27.94	30"	76.20	4
1956188	SLIM JIM® CONTAINER	YELLOW	23	87	22"	55.88	11"	27.94	30"	76.20	4
1956189	SLIM JIM® CONTAINER	RED	23	87	22"	55.88	11"	27.94	30"	76.20	4
FG354007BLUE	SLIM JIM® CONTAINER	BLUE (RECYCLING)	23	87	22"	55.88	11"	27.94	30"	76.20	4
FG354007GRN	SLIM JIM® CONTAINER	GREEN (RECYCLING)	23	87	22"	55.88	11"	27.94	30"	76.20	4

8900 Northpointe Executive Park Drive, Huntersville, NC 28078

RJS + ASSOCIATES
INTEGRATED FOOD SERVICE DESIGN

ITEM# 10 - SPARE NO.

<Spare No.>

RJS + ASSOCIATES
INTEGRATED FOOD SERVICE DESIGN

ITEM# 11 - TRASH RECEPTACLE, INDOOR (1 EA REQ'D)

Rubbermaid FG354060BLA

Slim Jim® Container, 23 gallon, 22"W x 11"D x 30"H, with venting channels, molded-in handles, general purpose waste, open type without lid, high-impact plastic construction, black, Made in USA

SLIM JIM® CONTAINERS

The Slim Jim® container delivers the durability needed for commercial environments combined with brand new innovation to increase worker productivity. New product features and accessories deliver the most efficient solution for collection, transportation, and disposal of multi-stream waste and recyclables.

Features and Benefits:

- Venting channels make removing liners up to 80% easier, improving productivity and reducing the risk of worker injury
- Four bag cinches secure liners around the rim of the container and allow for quick, knot-free liner changes
- Handles at the base and rim of the container improve grip and control while lifting and emptying full containers
- Rim with rib-strengthened design increases strength and resists crushing
- Build a recycling station with a variety of dolly and lid options to meet any facility need

COLORS AVAILABLE

Blue, Green, Black, Beige, Brown, Gray, Yellow*, Red*

* 23-gallon only

Material Composition:

Injection molded with a high-quality resin blend.

Accessories:

STAINLESS STEEL DOLLIES

- Slim Jim® Single Dolly
- Slim Jim® Double Dolly
- Slim Jim® Triple Dolly
- Slim Jim® Quadruple Dolly

RESIN DOLLY

- Slim Jim® Trainable Dolly

LIDS

- Bottles and Cans Lid
- Paper Lid
- Mixed Recycling Lid
- Hinged Lid
- Swing Lid

23-Gallon Slim Jim® Container

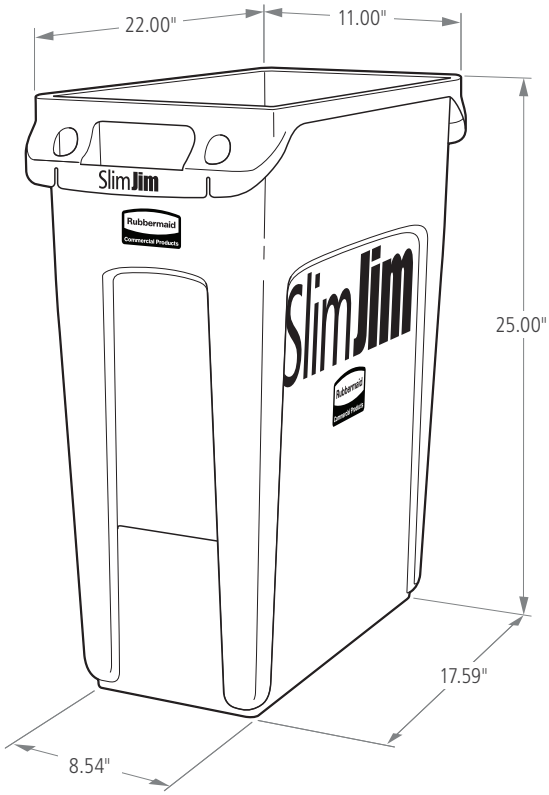

16-Gallon Slim Jim® Container

SLIM JIM® CONTAINERS

SKU #	DESCRIPTION	COLOR	CAPACITY		LENGTH		WIDTH		HEIGHT		PACK SIZE
			GAL	L	IN	CM	IN	CM	IN	CM	
1971258	SLIM JIM® CONTAINER	GRAY	16	61	22"	55.88	11"	27.94	25"	63.50	4
1955959	SLIM JIM® CONTAINER	BLACK	16	61	22"	55.88	11"	27.94	25"	63.50	4
1971259	SLIM JIM® CONTAINER	BEIGE	16	61	22"	55.88	11"	27.94	25"	63.50	4
1956181	SLIM JIM® CONTAINER	BROWN	16	61	22"	55.88	11"	27.94	25"	63.50	4
1971257	SLIM JIM® CONTAINER	BLUE	16	61	22"	55.88	11"	27.94	25"	63.50	4
1955960	SLIM JIM® CONTAINER	GREEN	16	61	22"	55.88	11"	27.94	25"	63.50	4
FG354060GRAY	SLIM JIM® CONTAINER	GRAY	23	87	22"	55.88	11"	27.94	30"	76.20	4
FG354060BLA	SLIM JIM® CONTAINER	BLACK	23	87	22"	55.88	11"	27.94	30"	76.20	4
FG354060BEIG	SLIM JIM® CONTAINER	BEIGE	23	87	22"	55.88	11"	27.94	30"	76.20	4
1956187	SLIM JIM® CONTAINER	BROWN	23	87	22"	55.88	11"	27.94	30"	76.20	4
1956185	SLIM JIM® CONTAINER	BLUE	23	87	22"	55.88	11"	27.94	30"	76.20	4
1956186	SLIM JIM® CONTAINER	GREEN	23	87	22"	55.88	11"	27.94	30"	76.20	4
1956188	SLIM JIM® CONTAINER	YELLOW	23	87	22"	55.88	11"	27.94	30"	76.20	4
1956189	SLIM JIM® CONTAINER	RED	23	87	22"	55.88	11"	27.94	30"	76.20	4
FG354007BLUE	SLIM JIM® CONTAINER	BLUE (RECYCLING)	23	87	22"	55.88	11"	27.94	30"	76.20	4
FG354007GRN	SLIM JIM® CONTAINER	GREEN (RECYCLING)	23	87	22"	55.88	11"	27.94	30"	76.20	4

8900 Northpointe Executive Park Drive, Huntersville, NC 28078

RJS + ASSOCIATES
INTEGRATED FOOD SERVICE DESIGN

ITEM# 12 - REACH-IN REFRIGERATOR (1 EA REQ'D)

True Mfg. - General Foodservice T-72-HC

Refrigerator, reach-in, three-section, (3) stainless steel doors, (9) PVC coated adjustable wire shelves, interior lighting, stainless steel front, aluminum sides, aluminum interior with stainless steel floor, 4" castors, R290 Hydrocarbon refrigerant, 3/4 HP, 115v/60/1-ph, 6.9 amps, NEMA 5-15P, cULus, UL EPH Classified, Made in USA

ACCESSORIES

Mfr	Qty	Model	Spec
True Mfg. - General Foodservice	1		Note: Due to the continued supply chain issues in the industry all True pricing is tentative based on final production dates. Any units ordered that will be produced on or after October 1st, 2022 may be subject to additional pricing escalators. Please contact your True representative for final lead times.
True Mfg. - General Foodservice	1		Self-contained refrigeration standard
True Mfg. - General Foodservice	1		Warranty - 7 year compressor (self-contained only), please visit www.Truemfg.com for specifics
True Mfg. - General Foodservice	1		Warranty - 3 year parts and labor, please visit www.Truemfg.com for specifics
True Mfg. - General Foodservice	1		Left door hinged left, center & right doors hinged right, standard
True Mfg. - General Foodservice	1		4" stem castors, standard (adds 5" to OA height)

TRUE MANUFACTURING CO., INC.
U.S.A. FOODSERVICE DIVISION
2001 East Terra Lane • O'Fallon, Missouri 63366-4434 • (636)240-2400
Fax (636)272-2408 • Toll Free (800)325-6152 • Intl Fax# (001)636-272-7546
Parts Dept. (800)424-TRUE • Parts Dept. Fax# (636)272-9471 • www.truemfg.com

Project Name: _____
Location: _____
Item #: _____ *Qty:* _____
Model #: _____

AIA #
SIS #

Model:
T-72-HC

T-Series:
Reach-In Solid Swing Door Refrigerator with Hydrocarbon Refrigerant

T-72-HC

- True's solid door reach-in's are designed with enduring quality that protects your long term investment.
- Designed using the highest quality materials and components to provide the user with colder product temperatures, lower utility costs, exceptional food safety and the best value in today's food service marketplace.
- Factory engineered, self-contained, capillary tube system using environmentally friendly R290 hydro carbon refrigerant that has zero (0) ozone depletion potential (ODP), & three (3) global warming potential (GWP).
- High capacity, factory balanced refrigeration system that maintains cabinet temperatures of 33°F to 38°F (.5°C to 3.3°C) for the best in food preservation.
- Stainless steel solid doors and front. The finest stainless available with higher tensile strength for fewer dents and scratches.
- Adjustable, heavy duty PVC coated shelves.
- Positive seal self-closing doors. Lifetime guaranteed door hinges and torsion type closure system.

Bottom mounted units feature:

- "No stoop" lower shelf.
- Storage on top of cabinet.
- Compressor performs in coolest, most grease free area of kitchen.
- Easily accessible condenser coil for cleaning.

ROUGH-IN DATA

Specifications subject to change without notice.
Chart dimensions rounded up to the nearest ⅛" (millimeters rounded up to next whole number).

Model	Doors	Shelves	Cabinet Dimensions (inches) (mm) W	D	H*	HP	Voltage	Amps	NEMA Config.	Cord Length (total ft.) (total m)	Crated Weight (lbs.) (kg)
T-72-HC	3	9	78⅛ 1985	29½ 750	78⅜ 1991	¾ N/A	115/60/1 N/A	6.9 N/A	5-15P	9 2.74	575 261

* Height does not include 5" (127 mm) for castors or 6" (153 mm) for optional legs.

MADE WITH INNOVATION IN THE USA · 5 YEAR COMPRESSOR WARRANTY USA · c UL us · natural refrigerant

5/20 Printed in U.S.A.

APPROVALS:

AVAILABLE AT:

Model:

T-72-HC

T-Series:
Reach-In Solid Swing Door Refrigerator with Hydrocarbon Refrigerant

STANDARD FEATURES

DESIGN
- True's commitment to using the highest quality materials and oversized refrigeration systems provides the user with colder product temperatures, lower utility costs, exceptional food safety and the best value in today's food service marketplace.

REFRIGERATION SYSTEM
- Factory engineered, self-contained, capillary tube system using environmentally friendly R290 hydro carbon refrigerant that has zero (0) ozone depletion potential (ODP), & three (3) global warming potential (GWP).
- High capacity, factory balanced refrigeration system that maintains cabinet temperatures of 33°F to 38°F (.5°C to 3.3°C) for the best in food preservation.
- State of the art, electronically commutated evaporator and condenser fan motors. ECM motors operate at higher peak efficiencies and move a more consistent volume of air which produces less heat, reduces energy consumption and provides greater motor reliability.
- Bottom mounted condensing unit positioned for easy maintenance. Compressor runs in coolest and most grease free area of the kitchen. Allows for storage area on top of unit.

CABINET CONSTRUCTION
- Exterior - Stainless steel front. Anodized quality aluminum ends. Corrosion resistant GalFan coated steel back.
- Interior - attractive, NSF approved, clear coated aluminum liner. Stainless steel floor with coved corners.
- Insulation - entire cabinet structure and solid doors are foamed-in-place using a high density, polyurethane insulation that has zero ozone depletion potential (ODP) and zero global warming potential (GWP).
- Welded, heavy duty steel frame rail, black powder coated for corrosion protection.
- Frame rail fitted with 4" (102 mm) diameter stem castors - locks provided on front set.

DOORS
- Stainless steel exterior with clear aluminum liners to match cabinet interior. Doors extend full width of cabinet shell. Door locks standard.
- Lifetime guaranteed recessed door handles. Each door fitted with 12" (305 mm) long recessed handle that is foamed-in-place with a sheet metal interlock to ensure permanent attachment.
- Positive seal self-closing doors. Lifetime guaranteed door hinges and torsion type closure system.
- Magnetic door gaskets of one piece construction, removable without tools for ease of cleaning.

SHELVING
- Nine (9) adjustable, heavy duty PVC coated wire shelves 24⅛"L x 22⅜"D (613 mm x 569 mm). Four (4) chrome plated shelf clips included per shelf.
- Shelf support pilasters made of same material as cabinet interior; shelves are adjustable on ½" (13 mm) increments.

LIGHTING
- LED Interior lighting - safety shielded. Lights activated by rocker switch mounted above doors.

MODEL FEATURES
- Exterior temperature display.
- Evaporator is epoxy coated to eliminate the potential of corrosion.
- NSF/ANSI Standard 7 compliant for open food product.

ELECTRICAL
- Unit completely pre-wired at factory and ready for final connection to a 115/60/1 phase, 15 amp dedicated outlet. Cord and plug set included.

115/60/1
NEMA-5-15R

OPTIONAL FEATURES/ACCESSORIES
Upcharge and lead times may apply.
- ❑ 6" (153 mm) standard legs.
- ❑ 6" (153 mm) seismic/flanged legs.
- ❑ Alternate door hinging (factory installed).
- ❑ Additional shelves.
- ❑ Half door bun tray racks. Each holds up to eleven 18"L x 26"D (458 mm x 661 mm) sheet pans (sold separately).
- ❑ Full door bun tray racks. Each holds up to twenty-two 18"L x 26"D (458 mm x 661 mm) sheet pans (sold separately).

PLAN VIEW

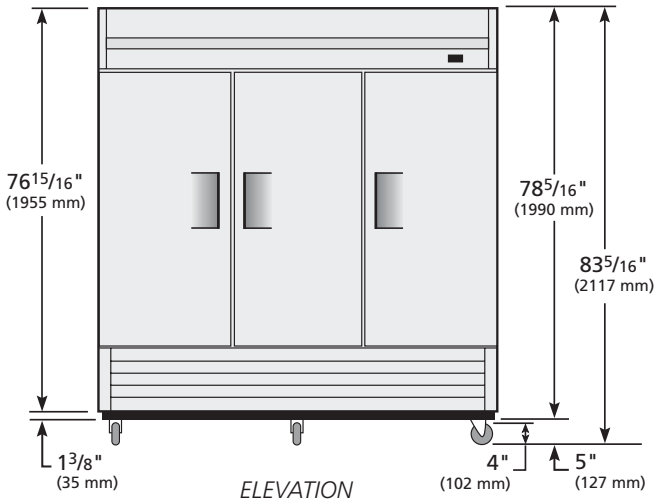

ELEVATION

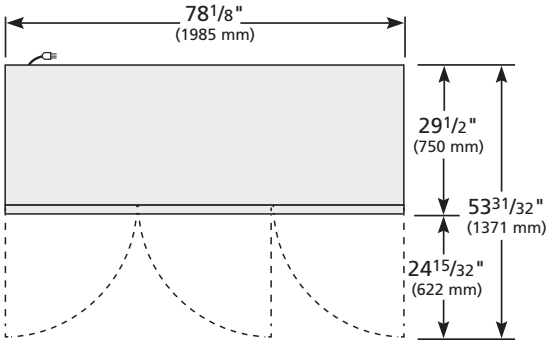

PLAN VIEW

3 YEAR PARTS + LABOR
7 YEAR COMPRESSOR
WARRANTY
(U.S.A. only)

METRIC DIMENSIONS ROUNDED UP TO THE NEAREST WHOLE MILLIMETER

SPECIFICATIONS SUBJECT TO CHANGE WITHOUT NOTICE

Model	Elevation	Right	Plan	3D	Back
T-72-HC	TFEY01E	TFEY01S	TFEY01P	TFEY013	

TRUE MANUFACTURING CO., INC.
2001 East Terra Lane • O'Fallon, Missouri 63366-4434 • (636)240-2400 • Fax (636)272-2408 • Toll Free (800)325-6152 • Intl. Fax# (001)636-272-7546 • www.truemfg.com

RJS + ASSOCIATES
INTEGRATED FOOD SERVICE DESIGN

ITEM# 13 - REACH-IN FREEZER (1 EA REQ'D)

True Mfg. - General Foodservice T-49F-HC

Freezer, reach-in, two-section, -10°F, (2) stainless steel doors, (6) PVC coated adjustable wire shelves, interior lighting, stainless steel front, aluminum sides, aluminum interior with stainless steel floor, 4" castors, R290 Hydrocarbon refrigerant, 1 HP, 115v/60/1-ph, 9.6 amps, NEMA 5-15P, Made in USA, cULus, UL EPH Classified, ENERGY STAR®

ACCESSORIES

Mfr	Qty	Model	Spec
True Mfg. - General Foodservice	1		Note: Due to the continued supply chain issues in the industry all True pricing is tentative based on final production dates. Any units ordered that will be produced on or after October 1st, 2022 may be subject to additional pricing escalators. Please contact your True representative for final lead times.
True Mfg. - General Foodservice	1		Self-contained refrigeration standard
True Mfg. - General Foodservice	1		Warranty - 7 year compressor (self-contained only), please visit www.Truemfg.com for specifics
True Mfg. - General Foodservice	1		Warranty - 3 year parts and labor, please visit www.Truemfg.com for specifics
True Mfg. - General Foodservice	1		Left door hinged left, right door hinged right standard
True Mfg. - General Foodservice	1		4" stem castors, standard (adds 5" to OA height)

TRUE MANUFACTURING CO., INC.
U.S.A FOODSERVICE DIVISION
2001 East Terra Lane • O'Fallon, Missouri 63366-4434 • (636)240-2400
Fax (636)272-2408 • Toll Free (800)325-6152 • Intl Fax# (001)636-272-7546
Parts Dept. (800)424-TRUE • Parts Dept. Fax# (636)272-9471 • www.truemfg.com

Project Name: _____
Location: _____
Item #: _____ *Qty:* _____
Model #: _____

AIA #
SIS #

Model:
T-49F-HC

T-Series:
Reach-In Solid Swing Door Freezer with Hydrocarbon Refrigerant

T-49F-HC

- True's solid door reach-in's are designed with enduring quality that protects your long term investment.
- Designed using the highest quality materials and components to provide the user with colder product temperatures, lower utility costs, exceptional food safety and the best value in today's food service marketplace.
- Factory engineered, self-contained, capillary tube system using environmentally friendly R290 hydro carbon refrigerant that has zero (0) ozone depletion potential (ODP), & three (3) global warming potential (GWP).
- High capacity, factory balanced refrigeration system that maintains -10°F (-23.3°C) temperatures. Ideal for both frozen foods and ice cream.
- Stainless steel solid doors and front. The very finest stainless with higher tensile strength for fewer dents and scratches.
- Adjustable, heavy duty PVC coated shelves.
- Positive seal self-closing doors. Lifetime guaranteed door hinges and torsion type closure system.
- Automatic defrost system time-initiated, temperature-terminated. Saves energy consumption and provides shortest possible defrost cycle.

Bottom mounted units feature:

- "No stoop" lower shelf.
- Storage on top of cabinet.
- Compressor performs in coolest, most grease free area of kitchen.
- Easily accessible condenser coil for cleaning.

ROUGH-IN DATA

Specifications subject to change without notice.
Chart dimensions rounded up to the nearest ⅛" (millimeters rounded up to next whole number).

Model	Doors	Shelves	Cabinet Dimensions (inches) (mm) W	D	H*	HP	Voltage	Amps	NEMA Config.	Cord Length (total ft.) (total m)	Crated Weight (lbs.) (kg)
T-49F-HC	2	6	54⅛ 1375	29½ 750	78⅜ 1991	1 1	115/60/1 230-240/50/1	9.6 5.5	5-15P ▲	9 2.74	480 218

* Height does not include 5" (127 mm) for castors or 6" (153 mm) for optional legs.

▲Plug type varies by country.

MADE WITH INNOVATION IN THE USA · 5 YEAR COMPRESSOR WARRANTY USA · ENERGY STAR · c UL us · CLASSIFIED UL EPT · natural refrigerant

5/20 Printed in U.S.A.

APPROVALS:

AVAILABLE AT:

Model:
T-49F-HC

T-Series:
Reach-In Solid Swing Door Freezer with Hydrocarbon Refrigerant

STANDARD FEATURES

DESIGN
- True's commitment to using the highest quality materials and oversized refrigeration systems provides the user with colder product temperatures, lower utility costs, exceptional food safety and the best value in today's food service marketplace.

REFRIGERATION SYSTEM
- Factory engineered, self-contained, capillary tube system using environmentally friendly R290 hydro carbon refrigerant that has zero (0) ozone depletion potential (ODP), & three (3) global warming potential (GWP).
- High capacity, factory balanced refrigeration system that maintains -10°F (-23.3°C) temperatures. Ideal for both frozen foods and ice cream.
- State of the art, electronically commutated evaporator and condenser fan motors. ECM motors operate at higher peak efficiencies and move a more consistent volume of air which produces less heat, reduces energy consumption and provides greater motor reliability.
- Bottom mounted condensing unit positioned for easy cleaning. Compressor runs in coolest and most grease free area of the kitchen. Allows for storage area on top of unit.
- Automatic defrost system time-initiated, temperature-terminated. Saves energy consumption and provides shortest possible defrost cycle.

CABINET CONSTRUCTION
- Exterior - Stainless steel front. Anodized quality aluminum ends. Corrosion resistant GalFan coated steel back.
- Interior - attractive, NSF approved, clear coated aluminum liner. Stainless steel floor with coved corners.
- Insulation - entire cabinet structure and solid door are foamed-in-place using a high density, polyurethane insulation that has zero ozone depletion potential (ODP) and zero global warming potential (GWP).
- Welded, heavy duty steel frame rail, black powder coated for corrosion protection.
- Frame rail fitted with 4" (102 mm) diameter stem castors - locks provided on front set.

DOORS
- Stainless steel exterior with clear aluminum liner to match cabinet interior. Doors extend full width of cabinet shell. Door locks standard.
- Lifetime guaranteed recessed door handles. Each door fitted with 12" (305 mm) long recessed handle that is foamed-in-place with a sheet metal interlock to ensure permanent attachment.
- Positive seal self-closing doors. Lifetime guaranteed door hinges and torsion type closure system.
- Magnetic door gaskets of one piece construction, removable without tools for ease of cleaning.

SHELVING
- Six (6) adjustable, heavy duty PVC coated wire shelves 24 9/16"L x 22 3/8"D (624 mm x 569 mm). Four (4) chrome plated shelf clips included per shelf.
- Shelf support pilasters made of same material as cabinet interior; shelves are adjustable on ½" (13 mm) increments.

LIGHTING
- LED Interior lighting - safety shielded. Lights activated by rocker switch mounted above doors.

MODEL FEATURES
- Exterior temperature display.
- Evaporator is epoxy coated to eliminate the potential of corrosion.
- Rear airflow guards prevent product from blocking optimal airflow.
- NSF/ANSI Standard 7 compliant for open food product.

ELECTRICAL
- Unit completely pre-wired at factory and ready for final connection to a 115/60/1 phase, 15 amp dedicated outlet. Cord and plug set included.

115/60/1
NEMA-5-15R

OPTIONAL FEATURES/ACCESSORIES
Upcharge and lead times may apply.
- ❑ 230 - 240V / 50 Hz.
- ❑ 6" (153 mm) standard legs.
- ❑ 6" (153 mm) seismic/flanged legs.
- ❑ Alternate door hinging (factory installed).
- ❑ Novelty baskets.
- ❑ Additional shelves.
- ❑ Half door bun tray racks. Each holds up to eleven 18"L x 26"D (458 mm x 661 mm) sheet pans (sold separately) (airflow guards need to be removed).
- ❑ Full door bun tray racks. Each holds up to twenty-two 18"L x 26"D (458 mm x 661 mm) sheet pans (sold separately) (airflow guards need to be removed).

PLAN VIEW

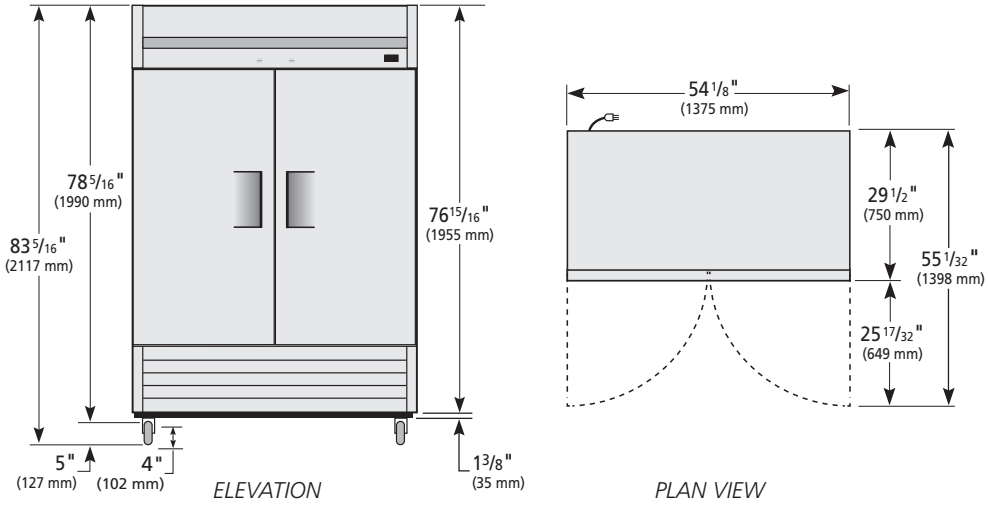

3 YEAR PARTS + LABOR
7 YEAR COMPRESSOR
WARRANTY
(U.S.A. only)

METRIC DIMENSIONS ROUNDED UP TO THE NEAREST WHOLE MILLIMETER

SPECIFICATIONS SUBJECT TO CHANGE WITHOUT NOTICE

Model	Elevation	Right	Plan	3D	Back
T-49F-HC					

TRUE MANUFACTURING CO., INC.
2001 East Terra Lane • O'Fallon, Missouri 63366-4434 • (636)240-2400 • Fax (636)272-2408 • Toll Free (800)325-6152 • Intl. Fax# (001)636-272-7546 • www.truemfg.com

RJS + ASSOCIATES
INTEGRATED FOOD SERVICE DESIGN

ITEM# 14 - ICE MAKER WITH BIN, CUBE-STYLE (1 EA REQ'D)

Manitowoc UDF0240A

NEO® Undercounter Ice Maker, cube-style, air-cooled, self contained, 26"W x 28"D x 38-1/2"H, production capacity up to 215 lb/24 hours at 70°/50° (160 lb AHRI certified at 90°/70°) 90 lbs ice 90 lb ice storage capacity, electronic controls, full bin and service indicators, production delay of (4, 12, or 24 hours), Alpha-San anti-microbial protection, forward sliding storage bin for access to refrigeration components, sealed foodzone with removable water trough, distribution tube and damper door, dice size cubes, 6" adjustable legs with flanged feet (painted gray), 1/3 HP, NSF, cULus, CE

ACCESSORIES

Mfr	Qty	Model	Spec
Manitowoc	1	WARRANTY-ICE-SC	3 year parts & labor (Machine), 5 year parts & labor (Evaporator), 5 year parts & 3 years labor (Compressor), standard (nc)
Manitowoc	1		(-161B) 115v/60/1-ph, 7.0 amps, cord with NEMA 5-15P
Manitowoc	1	K00063	Casters, 2.5", for use with NEO, Q-Series (not QM), & D-170 bin, (4) each, non-locking swivel
Manitowoc	1		Surcharge 5%

MANITOWOC

NEO®

NEO® 240 Undercounter Ice Machines

Models

- ☐ UDF-0240A
- ☐ UDF-0240W
- ☐ UYF-0240A
- ☐ UYF-0240W

- Up to 220 lbs (100 kg) of daily ice production
- Only 26" (66.04 cm) wide, 28.50" (72.4 cm) deep, and 38.50" (97.8 cm) high on 6" (15.24 cm) legs
- Cabinet volume 3.037 ft^3 (0.086 m^3)
- 90 lb. (40.0 Kg) ice storage capacity*

* Application capacity based on: 90% volume x 33lbs/ft3 average density of ice.

NEO undercounter ice machines are designed to provide ice right where you need it – within reach. Improvements in **Performance**, **Intelligence** and **Convenience** make your ice machine easy to own and less expensive to operate.

Performance – NEO produces more ice than ever before while using less water and energy. The storage bin provides industry leading capacity.

Intelligence – NEO provides feedback with full bin and service indicators. Delay function allows you to pause your machine for slow periods or days when you're closed.

Convenience – NEO offers a forward-sliding storage bin for easy access to refrigeration components without having to move the entire ice machine. Smooth, sealed food-zone with removable water trough, distribution tube, and damper door for faster cleaning. AlphaSan added to key internal components.

Available **LuminIce® Virus and Bacteria Inhibitor** controls viruses, bacteria, mold and yeast within the food zone to keep the machine clean longer.

Specifications

BTU Per Hour:
2,700 (average)
3,300 (peak)

Compressor:
Nominal rating: .33 HP

Cupra-Nickel Condenser:
(Water-cooled models)
Adds protection from corrosive water elements.

Refrigerant:
R-404A

Operating Limits:
- Ambient Temperature Range: 40˚ to 110˚F (4.4˚ to 43.3˚C)
- Water Temperature Range: 45˚ to 90˚F (4.4˚ to 32.2˚C)
- Water Pressure Ice Maker Water In: Min. 20 psi (137.9 kPA) Max. 80 psi (551.1 kPA)
- Condenser Inlet Water In: (Water-cooled only) Min. 20 psi (137.9 kPA) Max. 150 psi (1,034.2 kPA)

Ice Shape

Half Dice
⅜" x 1⅛" x ⅞"
(.95 x 2.86 x 2.22 cm)

Dice
⅞" x ⅞" x ⅞"
(2.22 x 2.22 x 2.22 cm)

Regular
1⅛" x 1⅛" x ⅞"
(2.86 x 2.86 x 2.22 cm)

Ice Machine Electric

Power Cord:
115/60/1 ice machines are factory pre-wired with a 6' (180 cm) power cord and NEMA 5-15P-plug configuration. 208-230/60/1 ice machines are factory pre-wired with a 6' (180 cm) power cord only, no plug is supplied.

Total Amps:
115/60/1 Air-cooled and Water-cooled: 7 amps

208-230/1/60 Air-cooled and Water-cooled: 3.5 amps

Maximum fuse size:
Air-cooled and Water-cooled: 15 amps
HACR-type circuit breakers can be used in place of fuses.

CALIFORNIA LOW LEAD QUALIFIED Conforms to NSF 61 Annex G · AHRI CERTIFIED www.ahridirectory.org · NSF c UL US LISTED · CE · AQ · ISO 9001:2015 Certification

2110 South 26th Street
Manitowoc, WI 54220

Tel: 1.920.682.0161
Fax: 1.920.683.7589

www.manitowocice.com

WELBILT

MANITOWOC®

NEO® 240 Undercounter Ice Machines

U-240

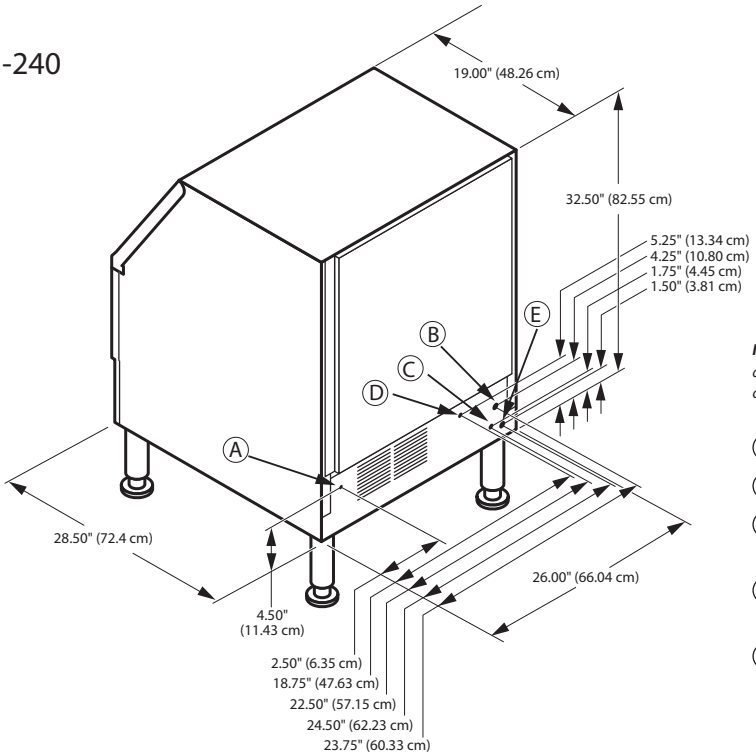

Installation Note *Recommended clearance for top, sides, and back is 5" (12.7 cm) however, there is no minimum clearance required.*

(A) Electrical Entrance

(B) 3/8" (0.95 cm) F.P.T. Ice Making Water Inlet

(C) 1/2" (1.27 cm) F.P.T. Minimum Water Condenser Outlet (water-cooled units)

(D) 3/8" (0.95 cm) F.P.T. Water Condenser Inlet (water-cooled units)

(E) 1/2" (1.27 cm) F.P.T. Ice Bin Drain

Specifications

Model	Ice Shape	Ice Production 24 Hours				Power kWh/ 100 lbs. @ 90°/70°F 32°/21°C	Potable water usage gal/100 lbs. ice @90/70°F
		70°Air/50°F Water 21°Air/10°C Water		90°Air/70°F Water 32°Air/21°C Water			
UDF-0240A	dice	215 lbs	98 kg	160 lbs	73 kg	7.9	16
UDF-0240W	dice	197 lbs	89 kg	174 lbs	79 kg	5.9	16
UYF-0240A	half-dice	219 lbs	99 kg	160 lbs	73 kg	7.8	16
UYF-0240W	half-dice	207 lbs	94 kg	180 lbs	82 kg	5.8	16
Water-cooled Condenser Water Usage / 100 lbs./45.4 kg of Ice: 147 gal. / 556 liters							

Standard 6" / 15.24 cm adjustable flange foot - gray painted legs included.
Standard plastic NEO ice scoop included.

Air Flow

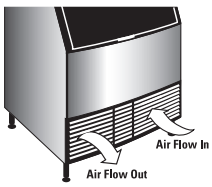

Air in right, air out left, no side vents. Great for installation under countertops and next to other equipment.

Removable Bin

Air Filter

Simple, tool-free removal for quick access during routine cleaning and maintenance.

2110 South 26th Street
Manitowoc, WI 54220

Tel: 1.920.682.0161
Fax: 1.920.683.7589

www.manitowocice.com
6500B 08/2020

WELBILT®

UNDERCOUNTER CUBE

	Model	Ice type	Cooling	Electrical	Shipping Weight		Replaces Model
SM-50	**SMS050A002-161**	gourmet	air	115v/60Hz/1	114 lbs / 52 kg		**N/A**

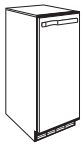

W 14.75" D 22.75" H 33.5"
W 37.5 D 57.8 H 85.1 cm

*53lbs/24 kg daily at 70/50°F
*44lbs/20 kg daily at 90/70°F

Ice storage capacity 25 lbs/11.3 kg
Includes AR-2800 water filter.
Drain pump available as accessory (K00376).
Includes 6' / 1.8m power cord with NEMA 5-15P plug.
Not compatible with iAuCS®.
IMPORTANT NOTE: Use only Metal Safe Cleaner 000000084 on this product.
Other cleaners will damage the evaporator and will not be covered under warranty.

	Model	Ice type	Cooling	Electrical	Shipping Weight		Replaces Model
UE65 / UE80	**UDE0065A-161B**	dice	air	115v/60Hz/1	109 lbs / 49 kg		**QM30A-161**
	UDE0080A-161B	dice	air	115v/60Hz/1	114 lbs / 52 kg		**QM45A-161**
	UDE0065A-251Z	dice	air	230v/50/Hz/1	109 lbs / 49 kg		**QM30A-251**
	UDP0080A-251Z	dice	air	230v/50Hz/1	114 lbs / 52 kg		**QM45A-251**

W 19.69" D 22.34" H 36"
W 50.0 D 56.7 H 91.4 cm

UE-65:
*57 lbs/26 kg daily at 70/50°F
*46 lbs/21 kg daily at 90/70°F
UE-80:
*102 lbs/46 kg daily at 70/50°F
*71 lbs/32 kg daily at 90/70°F

Ice storage capacity 30lbs/14 kg. Storage capacity is AHRI certified, measured at 1.059 cu ft..
Includes 6'/1.8 m power cord with NEMA 5-15P plug.
Price list performance rating is 60hz data. Refer to individual 50hz spec sheets for 50hz performance rating. Not compatible with iAuCS or LuminIce II.

Application storage capacity measured at 90% of total volume cu. ft x 33 lbs/ft3

	Model	Ice type	Cooling	Electrical	Shipping Weight		Replaces Model
UF140 / UF190	**URF0140A-161B**	Regular	Air	115v/60Hz/1	153 lbs / 69 kg		**UR0140A-161B**
	UDF0140A-161B	Dice	Air	115v/60Hz/1	153 lbs / 69 kg		**UD0140A-161B**
	UYF0140A-161B	1/2 Dice	Air	115v/60Hz/1	153 lbs / 69 kg		**UY0140A-161B**
	UDF0190A-161B	Dice	Air	115v/60Hz/1	153 lbs / 69 kg		**UD0190A-161B**
	UYF0190A-161B	1/2 Dice	Air	115v/60Hz/1	153 lbs / 69 kg		**UY0190A-161B**
	UDP0140A-251Z	Dice	Air	230v/50hz/1	153 lbs / 69 kg		**UD0140A-251Z**
	UYP0140A-251Z	1/2 Dice	Air	230v/50hz/1	153 lbs / 69 kg		**UY0140A-251Z**
	UDF0190A-251Z	Dice	Air	230v/50hz/1	153 lbs / 69 kg		**UD0190A-251Z**
	UYF0190A-251Z	1/2 Dice	Air	230v/50hz/1	153 lbs / 69 kg		**UY0190A-251Z**

W 26" D 28.5" H 38.5"
W 66 D 72.4 H 97.8 cm

UF-140:
*137lbs/62 kg daily at 70/50°F
*100lbs/45 kg daily at 90/70°F
UF-190:
*198lbs/90 kg daily at 70/50°F
*140lbs/64 kg daily at 90/70°F

Application storage capacity 90 lbs/ 40 kg. Includes 6 ft/1.8 m power cord with NEMA 5-15P plug ("B" Plug). Cubic Volume 3.037.
Storage capacity is AHRI certified. Price list performance rating is 60hz data. Refer to individual 50hz spec sheets for 50hz performance rating. Not compatible with iAuCS. Luminice® II compatible as accessory.
Application storage capacity measured 90% of total volume in cu. ft. x 33 lbs/ft3.

	Model	Ice type	Cooling	Electrical	Shipping Weight		Replaces Model
UF240	**UDF0240A-161B**	Dice	Air	115v/60Hz/1	157 lbs / 72kg		**UD0240A-161B**
	UDF0240A-261Z	Dice	Air	208-230v/60hz/1	157 lbs / 72kg		**UD0240A-261Z**
	UDF0240W-161B	Dice	Water	115v/60Hz/1	160 lbs / 73 kg		**UD0240W-161B**
	UYF0240A-161B	1/2 Dice	Air	115v/60Hz/1	159 lbs / 72 kg		**UY0240A-161B**
	UYF0240A-261Z	1/2 Dice	Air	208-230v/60hz/1	159 lbs / 72 kg		**UY0240A-261Z**
	UYF0240W-161B	1/2 Dice	Water	115v/60Hz/1	159 lbs / 72 kg		**UY0240W-161B**
	UDP0240A-251Z	Dice	Air	230v/50hz/1	157 lbs / 72kg		**UD0240A-251Z**
	UYP0240A-251Z	1/2 Dice	Air	230v/50hz/1	159 lbs / 72 kg		**UY0240A-251Z**
	UYF0240W-251Z	1/2 Dice	Water	230v/50hz/1	159 lbs / 72 kg		**UY0240W-251Z**

W 26" D 28.5" H 38.5"
W 66 D 72.4 H 97.8 cm

*219lbs/99 kg daily at 70/50°F
*160lbs/73 kg daily at 90/70°F

Application storage capacity 90 lbs/40 kg. Cubic Volume 3.037. Storage Capacity is AHRI certified.
Includes 6 ft/1.8 m power cord with NEMA 5-15P plug ("B" Plug). Price list performance rating is 60hz data. Refer to individual 50hz spec sheets for 50hz performance rating. Not compatible with iAuCS. Luminice II compatible as accessory.
Application storage capacity measured 90% of total volume in cu. ft. x 33 lbs/ft3.

★ ***ENERGY STAR® Qualified Model***
Air filter standard on self-contained air-cooled ice cube machines.
**Daily ice production based on Half-Dice air-cooled condenser model at air temperature/water temperature.*

Manitowoc

ICE MACHINE WARRANTY

Manitowoc Ice, Inc. (hereinafter referred to as the "COMPANY") warrants for a period of thirty-six months from the installation date (except as limited below) that new ice machines manufactured by the COMPANY shall be free of defects in material or workmanship under normal and proper use and maintenance as specified by the COMPANY and upon proper installation and start-up in accordance with the instruction manual supplied with the ice machine. The COMPANY'S warranty hereunder with respect to the compressor shall apply for an additional twenty-four months, excluding all labor charges, and with respect to the evaporator for an additional twenty-four months, including labor charges.

The obligation of the COMPANY under this warranty is limited to the repair or replacement of parts, components, or assemblies that in the opinion of the COMPANY are defective. This warranty is further limited to the cost of parts, components or assemblies and standard straight time labor charges at the servicing location.

Time and hourly rate schedules, as published from time to time by the COMPANY, apply to all service procedures. Additional expenses including without limitation, travel time, overtime premium, material cost, accessing or removal of the ice machine, or shipping are the responsibility of the owner, along with all maintenance, adjustments, cleaning, and ice purchases. Labor covered under this warranty must be performed by a COMPANY Contracted Service Representative or a refrigeration service agency as qualified and authorized by the COMPANY'S local Distributor. The COMPANY'S liability under this warranty shall in no event be greater than the actual purchase price paid by customer for the ice machine.

The foregoing warranty shall not apply to (1) any part or assembly that has been altered, modified, or changed; (2) any part or assembly that has been subjected to misuse, abuse, neglect, or accidents; (3) any ice machine that has been installed and/or maintained inconsistent with the technical instructions provided by the COMPANY; or (4) any ice machine initially installed more than five years from the serial number production date. This warranty shall not apply if the Ice Machine's refrigeration system is modified with a condenser, heat reclaim device, or parts and assemblies other than those manufactured by the COMPANY, unless the COMPANY approves these modifications for specific locations in writing.

THIS WARRANTY IS IN LIEU OF ALL OTHER WARRANTIES OR GUARANTEES OF ANY KIND, EXPRESSED OR IMPLIED, INCLUDING ANY IMPLIED WARRANTY OF MERCHANTABILITY OR FITNESS FOR A PARTICULAR PURPOSE.

In no event shall the COMPANY be liable for any special, indirect, incidental or consequential damages. Upon the expiration of the warranty period, the COMPANY'S liability under this warranty shall terminate.

The foregoing warranty shall constitute the sole liability of the COMPANY and the exclusive remedy of the customer or user. To secure prompt and continuing warranty service, the warranty registration card or register on line within five (5) days from the installation date.

MANITOWOC ICE, INC.
2110 So. 26th St., P.O. Box 1720, Manitowoc, WI 54221-1720
Telephone: 920-682-0161 • Fax: 920-683-7585
Web Site - www.manitowocice.com
Form 80-0373-3 Rev. 01/02

RJS + ASSOCIATES
INTEGRATED FOOD SERVICE DESIGN

ITEM# 14A - WATER FILTRATION SYSTEM, FOR ICE MACHINES (1 EA REQ'D)

3M Purification ICE120-S

(5616003) 3M™ Water Filtration Products Water Filter System, with gauge, 17"H x 4.5"D, valve-in-head, standard water, single vessel, 1/4-turn shut off valve, max pressure of 125 psi at 100°F, 0.5 micron, 1.5 gpm flow rate, 9,000 gallons capacity, for sediment, chlorine taste & odor, cyst, scale, includes: (1) integral mounting bracket and (1) o-ring seal cartridge filter, 3/8" FNPT connections, NSF certified (for ice machines - cubers up to 750lbs, flakers up to 1200lbs: Manitowoc I 0302, 0303, 0304, 0305, 0322, 0323, 0324, 0325, 0452, 0453, 0454, 0455, 0502, 0503, 0504, 0505, 0522, 0523, 0523, 0524, 0525, 0594, 0592, 0606, 0696, Scotsman C 0322, 0330, 0522, 0530, 0630, Hoshizaki IM500, KM 250, 320, 351, 410, 450, 451, 515, 600, 631, 650, Ice-O-Matic ICE 0250, 0305, 0320, 0400, 0406, 0500, 0506, 0520, 0525, 0605, 0606, Koolaire K0250, 0350, 0420, 0500, 0600, Atosa YR140, YR280, YR450)

3M™ Water Filtration Products

SPEC# _____

QUANTITY _____

application: **ICE**

models:

ICE120-S/ICE125-S

3M Purification Inc. Water Filtration Products Models ICE120-S and ICE125-S single cartridge water filtration systems help provide consistent high quality water for commercial ice by reducing the effects of sediment and chlorine taste and odor at flow rates up to 1.5 gpm (5.7 lpm). Built-in scale inhibition reduces the ability of calcium and magnesium to precipitate on the evaporator plates as hard scale.

- **ICE120-S** combines cyst, sediment and chlorine taste and odor reduction, while reducing the effects of chlorine corrosion and scale for up to 9,000 gallons (34,069 liters).
- **ICE125-S** combines chlorine taste and odor reduction with sediment and scale reduction from higher turbidity water, while reducing the effects of chlorine corrosion and scale for up to 10,000 gallons (37,854 liters).

PRODUCT BENEFITS

- Effectively reduces sediment and chlorine taste and odor for better equipment protection and clearer, great tasting ice.
- Tested and verified by manufacturer's laboratory to Standard 53 for cyst reduction (HF20-S replacement cartridge).
- NSF Standard 42 and/or FDA CFR-21 compliant materials.
- Built-in scale inhibitor reduces lime scale build-up on evaporator plates as tested by 3M Purification.
- Valve-in-head design simultaneously shuts off and vents water, allowing for simple and virtually trouble-free cartridge change-outs without the need to shut off the upstream feed water.
- Sanitary Quick Change (SQC) encapsulated cartridge design allows for fast and easy cartridge change-outs with a 1/4 turn.
- 3/8" FNPT horizontal inlet and outlet ports allow direct or easily adaptable connections to existing plumbing lines.

PRODUCT SPECIFICATIONS

Model Number	Part Number	Reduction Claims	Nominal Micron Rating	Capacity	Service Flow Rate	Application	Replacement Cartridge	Sizing
ICE120-S	56160-03	Cyst, Sediment, Chlorine Taste and Odor, Scale[1]	0.5	9,000 gallons (34,069 liters)	1.5 gpm (5.7 lpm)	Most Standard Water	HF20-S: 56151-03	Low Flow Cubers to 750 lbs. (340 kg) High Flow Cubers to 200 lbs. (91 kg) Flakers to 1,200 lbs. (544 kg)
ICE125-S	56160-04	Sediment, Chlorine Taste and Odor, Scale[1]	1.0	10,000 gallons (37,854 liters)	1.5 gpm (5.7 lpm)	Higher Turbidity Water	HF25-S: 56152-03	Low Flow Cubers to 750 lbs. (340 kg) High Flow Cubers to 200 lbs. (91 kg) Flakers to 1,200 lbs. (544 kg)

[1]Tested and verified by manufacturer's laboratory

ICE120-S/ICE125-S

SPEC# _____

QUANTITY _____

MODEL NUMBER _____

PART NUMBER _____

3M Purification Inc. Water Filtration Products

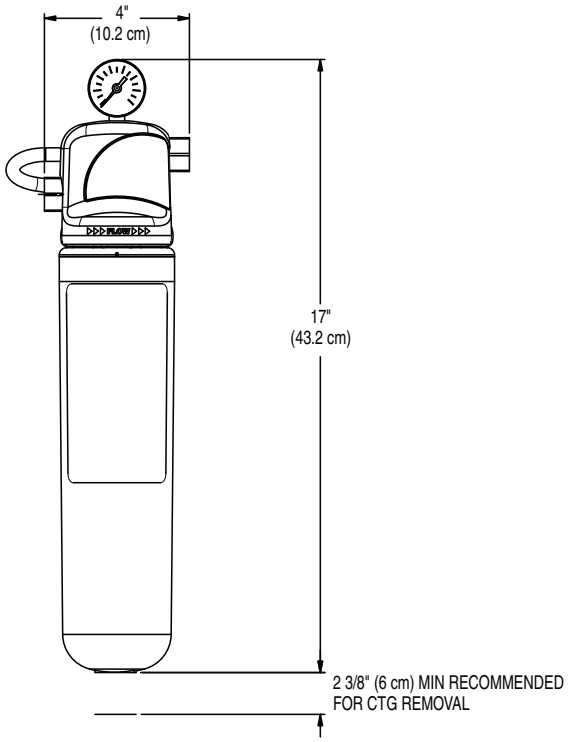

⚠ **WARNING: To reduce the risk associated with the ingestion of contaminants:**

- **Do not use with water that is microbiologically unsafe or of unknown quality without adequate disinfection before or after the system.** Systems certified for cyst reduction may be used on disinfected water that may contain filterable cysts. EPA Establishment #070595-CT-001

3M Purification Inc. recommends regularly scheduled maintenance and replacement of the filter cartridge(s) in order for the product to perform as advertised/sold. 3M Purification shall not be liable for system failures due to improper maintenance.

PHYSICAL SPECIFICATIONS

- System includes a head assembly with integral mounting bracket, pressure gauge and a single cartridge filter.
- Inlet and outlet plumbing connections are 3/8" FNPT.
- System incorporates an internal automatic 1/4 turn shut-off valve.
- Filter cartridges are o-ring seal type.
- System maximum operating pressure of 125 psi (862 kPa) and operating temperature of 100°F (37.8°C).
- Recommended service flow rate is up to 1.5 gpm (5.7 lpm).
- Filter cartridges incorporate carbon block filtration medium and scale inhibitor.
- System materials are NSF Standard 42 and/or FDA CFR-21 compliant.
- Cartridges are sanitary in design, requiring no contact with the filter media during cartridge change-out.
- Filter cartridges require no pre-activation.
- NSF Performance Data Sheet (PDS) is included.
- Shipping weight: 19 lbs. (8.6 kg) per case.
- Case quantity: 6.

IMPORTANT: INSTALLATION TIPS

These installation tips are for informational purposes only and are not intended to be used as actual installation instructions. CAUTION: To reduce the risk associated with property damage due to water leakage:

- **Read and follow** Use Instructions before installation and use of this system.
- Installation and use **MUST** comply with all state and local plumbing codes.
- **Protect from freezing,** remove filter cartridge when temperatures are expected to drop below 40°F (4.4°C).
- **Do not install on hot water supply lines.** The maximum operating water temperature of this filter system is 100°F (37.8°C).
- **Do not install** if water pressure exceeds 125 psi (862 kPa). If your water pressure exceeds 80 psi (552 kPa), you must install a pressure limiting valve. Contact a plumbing professional if you are uncertain how to check your water pressure.
- **Do not install** where water hammer conditions may occur. If water hammer conditions exist you must install a water hammer arrester. Contact a plumbing professional if you are uncertain how to check for this condition.
- The disposable filter cartridge **MUST** be replaced every 12 months, at the rated capacity or if a noticeable reduction in flow rate occurs.

LIMITED WARRANTY

3M Purification Inc. warrants this Product will be free from defects in material and manufacture for five (5) years from the date of purchase: The filter cartridge or filter membrane is warranted to be free from defects in material and manufacture for one (1) year. This warranty does not cover failures resulting from abuse, misuse, alteration or damage not caused by 3M Purification Inc. or failure to follow installation and use instructions. No warranty is given as to the service life of any filter cartridge or membrane as it will vary with local water conditions and water consumption. **3M PURIFICATION INC. MAKES NO OTHER WARRANTIES OR CONDITIONS, EXPRESS OR IMPLIED, INCLUDING, BUT NOT LIMITED TO, ANY IMPLIED WARRANTY OR CONDITION OF MERCHANTABILITY OR FITNESS FOR A PARTICULAR PURPOSE OR ANY IMPLIED WARRANTY OR CONDITION ARISING OUT OF A COURSE OF DEALING, CUSTOMER OR USAGE OF TRADE.** If the Product fails to satisfy this Limited Warranty during the warranty period, 3M Purification Inc. will replace the Product or refund your Product purchase price. This warranty does not cover labor. **The remedy stated in this paragraph is Customer's sole remedy and 3M Purification Inc.'s exclusive obligation. For additional information, see the entire Limited Warranty located in the product Installation and Operating Instruction Manual.**

Limitation of Liability: 3M Purification Inc. will not be liable for any loss or damage arising from this 3M Purification Inc. product, whether direct, indirect, special, incidental, or c onsequential, regardless of the legal theory asserted, including warranty, contract, negligence or strict liability. Some states and countries do not allow the exclusion or limitation of incidental or consequential damages, so the above limitation or exclusion may not apply to you.

3M

3M Purification Inc.
400 Research Parkway
Meriden, CT 06450 U.S.A.
Toll Free: 1.800.243.6894
Worldwide: 203.237.5541
Fax: 203.630.4530
www.3Mpurification.com

NSF

Visit www.nsf.org for the claims associated with products that are NSF listed.

LITFS288 0811B
70-0201-9415-8
Please recycle. Printed in U.S.A.

RJS + ASSOCIATES
INTEGRATED FOOD SERVICE DESIGN

ITEM# 15 - HEATED HOLDING CABINET (1 EA REQ'D)

Alto-Shaam 1200-UP

Halo Heat® Low Temperature Holding Cabinet, double compartment, on/off simple controller with adjustable thermostats, indicator light, (2) sets of chrome plated universal side rails, (4) sets of pan slides, (16) 20" x 12" x 2-1/2" full size pan capacity, heavy stainless steel exterior, 5" casters; 2 rigid, 2 swivel with brakes, EcoSmart®, cULus, UL EPH Classified, CE, IPX4, TUV NORD, EAC

ACCESSORIES

Mfr	Qty	Model	Spec
Alto-Shaam	1		NOTE: Subject to Manufacturer's Terms & Conditions. See Documents Section
Alto-Shaam	1		120v/50/60/1-ph, 1.9 kW, 16.0 amps, NEMA 5-20P, standard
Alto-Shaam	2		Solid door, hinged on right, standard
Alto-Shaam	1	5031776	Caster Package, 5" swivel casters

1200-UP
Low Temperature Hot Food Holding Cabinet

Keeping food that has been cooked to perfection hot and fresh until the moment it is served demands the gentle precision of Alto-Shaam's exclusive Halo Heat® technology. With controlled temperatures and a closed environment free from forced air, harsh heating elements and added humidity, food is kept warm and flavorful, just as intended.

1200-UP

Standard features

- Simple and intuitive pushbutton control that commands all appliance functions with easily identifiable icons
- Halo Heat—a controlled, uniform heat source that gently surrounds food for better appearance, taste, and longer holding life
- Stainless steel interior resists corrosion
- Digital control senses temperature drops faster, providing quick heat recovery time
- Close temperature tolerance and even heat application maintain ideal serving temperature throughout the cabinet
- Door venting holds crispy food better

Deluxe control option (select one)

Deluxe control features SureTemp™ heat recovery system. SureTemp™ reacts immediately to compensate for any loss of heat whenever the door is opened.

- ☐ Deluxe control **(A)**
- ☐ Deluxe control with probe **(A)**
- ☐ Deluxe control with six (6) independent shelf timers **(B)**
- ☐ Deluxe control with probe and shelf timers **(B)**

A

B

Side rack model

- ☐ As an alternative to universal pan slides, this unit can be ordered as a "side rack" model which is equipped with two (2) side racks and three (3) chrome plated wire shelves. It will accommodate full and half size US hotel and European gastronorm pans on the side racks or shelves, or sheet pans on shelves.

TEMPERATURE

Temperature range: 60°F to 200°F (16°C to 93°C)

LISTED COOKING APPLIANCE 584m

ANSI/NSF 4

IP X4

N11942

Configurations (select one)

Door choices

- ☐ Solid door, standard
- ☐ Window door, optional

Door swing

- ☐ Right hinged, standard
- ☐ Left hinged, optional

Electrical

- ☐ 120V, 1 ph
- ☐ 208–240V (4000W), 1 ph
- ☐ 230V (4000W), 1 ph
- ☐ 208–240V (2000W), 1 ph
- ☐ 230V (2000W), 1 ph

Cabinet choices

- ☐ Reach-in, standard
- ☐ Pass-through, optional—doors hinged on opposite sides
- ☐ Pass-through, optional—doors hinged on same side. Requires factory installed counterweight. Add 110lbs (50kg) to net and shipping weight.

Accessories (select all that apply)

- ☐ Bumper, full perimeter (5012932)
- ☐ Handle kit, push/pull—set of four (55662)
- ☐ Door lock with key—each handle (LK-22567)
- ☐ Security panel with lock—requires door lock (LK-22567) (5013934)
- ☐ Pan grid, wire, 16-3/8" x 24-3/4" (416mm x 619mm) (PN-2115)
- ☐ Legs, 6" (152mm), flanged—set of four (5011149)
- ☐ Drip pan with drain, 1-11/16" (43mm) deep (5014448)
- ☐ Water reservoir pan—for proofing (1775)
- ☐ Water reservoir pan cover (1774)
- ☐ Universal pan slides—2 required
- ☐ Chrome plated (SR-24447)
- ☐ Stainless steel (SR-24762)

Casters, stem—2 rigid, 2 swivel w/ brake

- ☐ 3-1/2" (89mm) (5008017)

Shelves

- ☐ Stainless steel (SH-23738)
- ☐ Chrome plated (SH-2733)

Additional features

- ☐ Side rack model—as an alternative to pan slides, this unit can be ordered as a "side rack" model

1200-UP

ALTO-SHAAM

CAPACITY

Pan Slides (2 per set)—1-3/4" (44mm) centers
Per compartment

8 Eight full-size or GN 1/1 pans 2-1/2" (65mm) deep—two per set of pan slides, sixteen full-size or GN 1/1 pans 2-1/2" (65mm) deep—with four additional sets of pan slides

8 Eight full-size or GN 1/1 pans 4" (100mm) deep—two per set of pan slides, no additional capacity with additional pan slides

8 Eight full-size or GN 1/1 pans 6" (150mm) deep—two per set of pan slides, no additional capacity with additional pan slides

4 Four full-size sheet pans—one per set of pan slides, sixteen full-size sheet pans with twelve additional pan slides

192 lb (87kg) product maximum

120 qt (152 L) volume maximum

Side Racks and Shelves
Per compartment

16 Sixteen full-size or GN 1/1 pans 2-1/2" (65mm) deep—two per shelf, no additional capacity with additional shelves

8 Eight full-size or GN 1/1 pans 4" (100mm) deep—two per shelf, no additional capacity with additional shelves

8 Eight full-size or GN 1/1 pans 6" (150mm) deep—two per shelf, no additional capacity with additional shelves

3 Three full-size sheet pans—one per shelf, eight full-size sheet pans with five additional shelves

192 lb (87kg) product maximum

120 qt (152 L) volume maximum

Specification

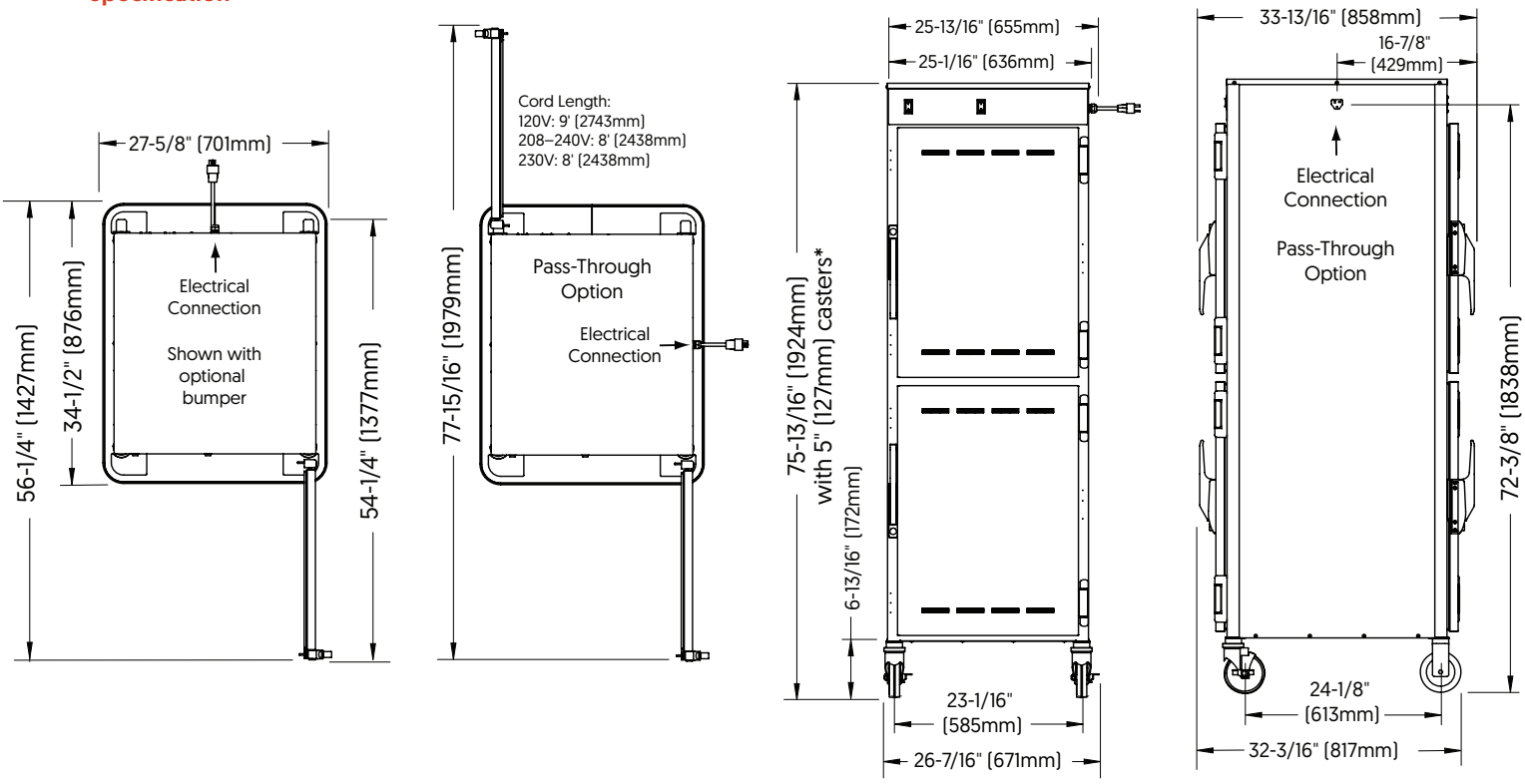

*74-1/16" (1881mm) with optional 3-1/2" (89mm) casters
*75-5/8" (1921mm) with optional 6" (152mm) legs

DIMENSIONS

Model	Exterior (H x W x D)	Interior—each compartment (H x W x D)
1200-UP	75-13/16" x 26-7/16" x 32-3/16" (1924mm x 671mm x 817mm)	28-3/4" x 21-5/16" x 26-1/2" (730mm x 541mm x 673mm)
	Pass-Through Exterior	**Net Weight**
	75-13/16" x 26-7/16" x 33-13/16" (1924mm x 671mm x 858mm)	333 lb (151 kg)
	Ship Dimensions (L x W x H)*	**Ship Weight***
1200-UP	35" x 35" x 82" (889mm x 889mm x 2083mm)	393 lb (178 kg)

*Domestic ground shipping information. Contact factory for export weight and dimensions.

1200-UP

ALTO-SHAAM

CHECK FIRST

- Appliance must be installed level.
- Appliance must not be installed in any area where it may be affected by steam, grease, dripping water, extreme temperatures, or any other severely adverse conditions.
- Appliances with casters and no cord or plug must be secured to the building structure with a flexible connector. Not factory supplied.

CLEARANCE

Top:	2" (51mm)
Left:	1" (25mm)
Right:	1" (25mm)
Back:	3" (76mm)

HEAT

Heat of rejection

1200-UP	Heat Gain qs, BTU/hr	Heat Gain qs, kW
	770	0.23

ELECTRIC

1200-UP	V	Ph	Hz	A	kW	Cord & Plug
120V	120	1	50/60	16.0	1.9	NEMA 5-20p 20A-125V plug
208-240V	208 (2000W)	1	50/60	7.0	1.4	NEMA 6-15p 15A-250V plug (U.S.A. only)
	240 (2000W)	1	50/60	8.0	1.9	
	208 (4000W)	1	50/60	14.0	2.9	No cord or plug
	240 (4000W)	1	50/60	16.0	3.8	
230V	230 (2000W)	1	50/60	7.7	1.8	plugs rated 250V CEE 7/7
	230 (4000W)	1	50/60	15.4	3.5	CH2-16p BS 1363 (U.K. only) AS/NZS 3112

CONTACT US

W164 N9221 Water Street | Menomonee Falls, Wisconsin 53051 | U.S.A.
Phone: 262.251.3800 | 800.558.8744 U.S.A./Canada | Fax: 262.251.7067 | **alto-shaam.com**

1200-UP-HH-SPC-0007- 03/20 Printed in U.S.A.

RJS + ASSOCIATES
INTEGRATED FOOD SERVICE DESIGN

ITEM# 16 - WORK TABLE (1 EA REQ'D)

fabctr STAINLESS STEEL

See plans for location and placement of item with reference to adjoining equipment.

ACCESSORIES

Mfr	Qty	Model	Spec
fabctr	1		Similar to standard details FD-1.1A, FD-1.2A, FD-1.4, FD-1.5a, FD-1.8, FD-4.4 and FD-4.5. These standard details are to be utilized as basic minimum guidelines only. Refer to these written specifications and any fabrication details included in the contract drawings for precise and complete fabrication instructions.

RJS + ASSOCIATES
INTEGRATED FOOD SERVICE DESIGN

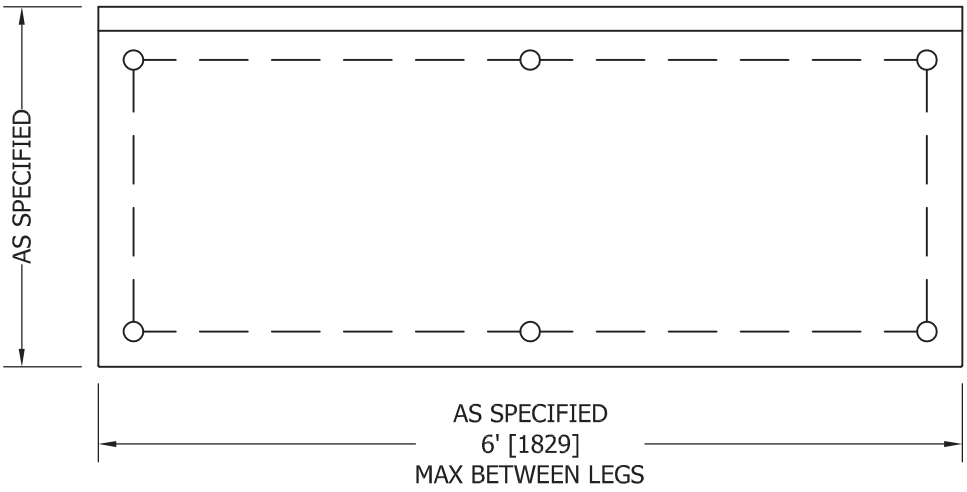

PLAN VIEW

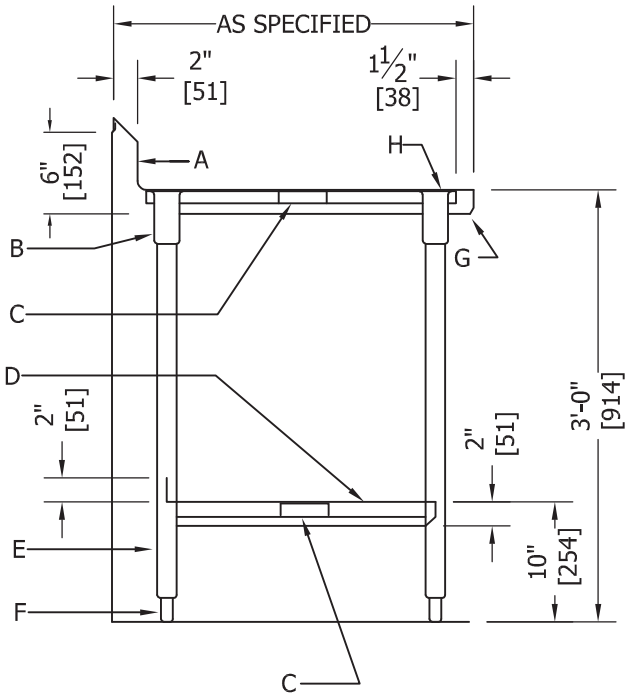

SECTION VIEW

LEGEND:
A. BACKSPLASH DETAIL AS SPECIFIED
B. STAINLESS STEEL GUSSET
C. CHANNEL REINFORCING
D. UNDERSHELF (SEE DETAIL FD-1.8)
E. 1-5/8" ø x 16 GA. [1.5mm] LEGS & CROSSRAILS
F. ADJUSTABLE FEET (DETAIL FD-1.4)
G. EDGE DETAIL AS SPECIFIED
H. 14 GA. [1.8mm] STAINLESS STEEL TOP

NOTES:
1. MATERIAL TO BE 14 GA. [1.8mm] STAINLESS STEEL
2. ENTIRE UNIT TO BE ALL WELDED COVE CORNERED CONSTRUCTION WITH VERTICAL AND HORIZONTAL AND INTERIOR CORNERS HAVING A 3/4" [20mm] RADIUS.

DETAIL #	DESCRIPTION:	
FD-4.4	WORK TABLE W/ UNDERSHELF	
	SCALE: 3/4" = 1'-0"	MATERIAL: 304 STAINLESS STEEL CONSTRUCTION

RJS + ASSOCIATES
INTEGRATED FOOD SERVICE DESIGN

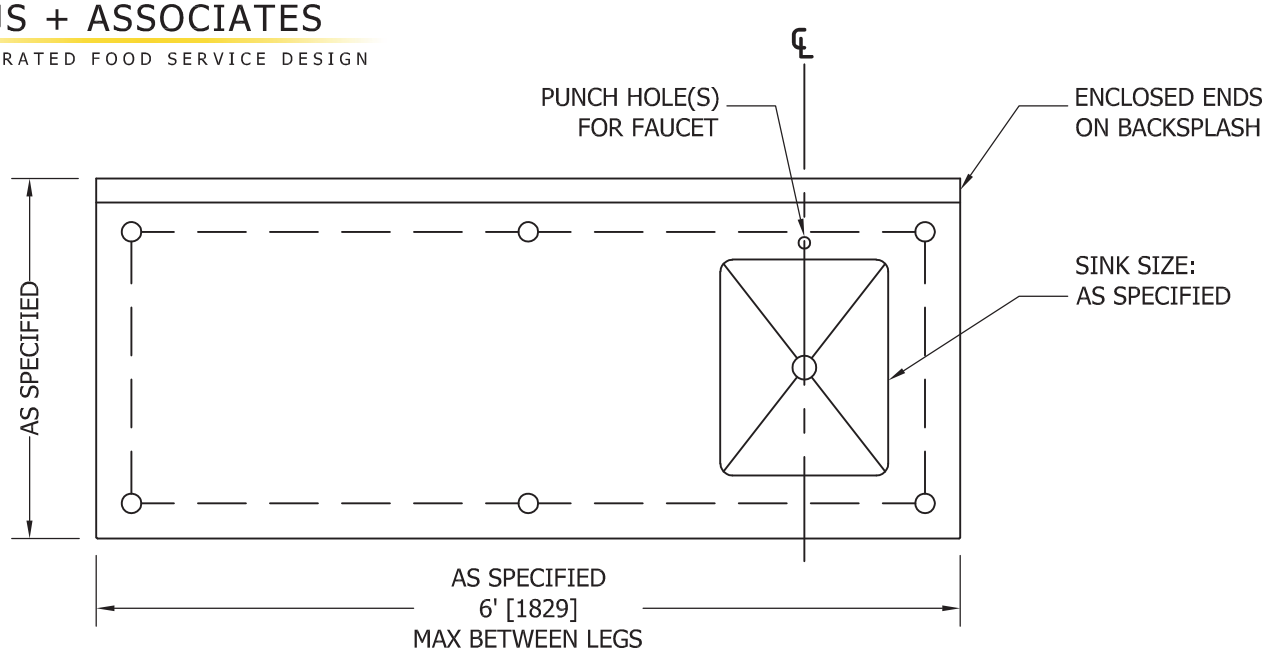

PLAN

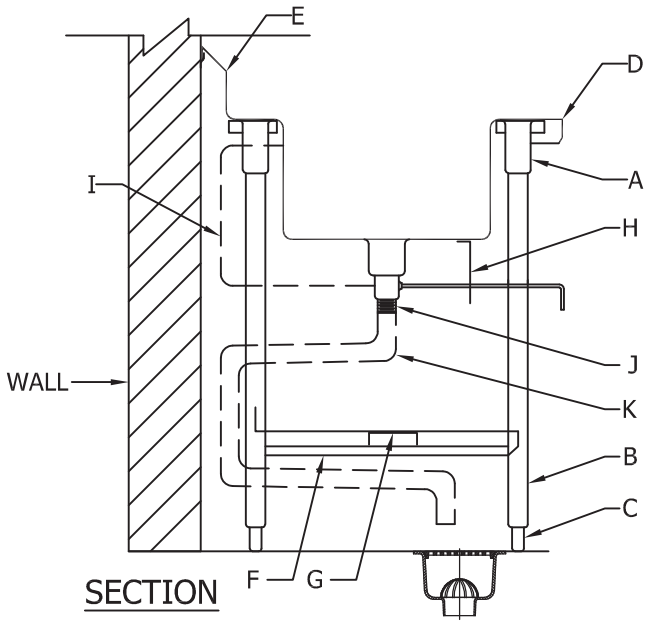

SECTION

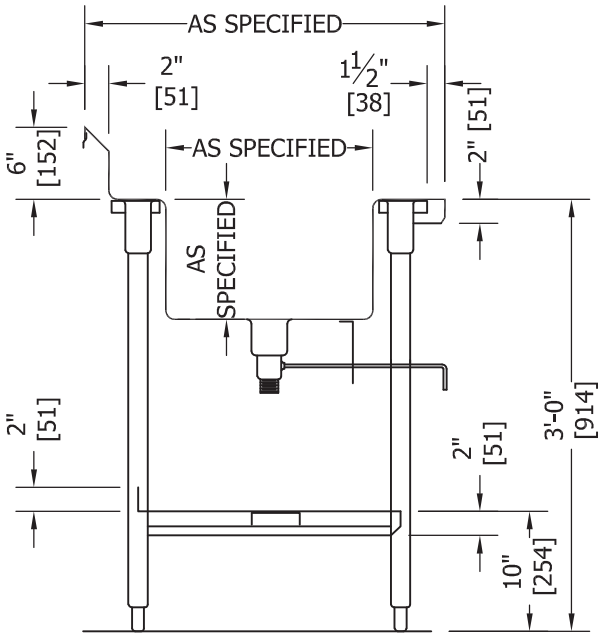

SECTION

LEGEND:
A. STAINLESS STEEL GUSSET
B. 1-5/8" ϕ X 16 GA. [1.5mm] LEGS AND CROSSRAILS
C. ADJUSTABLE FEET (SEE DETAIL FD-1.4)
D. EDGE DETAIL AS SPECIFIED
E. BACKSPLASH DETAIL AS SPECIFIED
F. 16 GA. [1.5mm] S/S UNDERSHELF (SEE DETAIL FD-1.8)
G. CHANNEL REINFORCING
H. WASTE LEVER BRACKET (SEE DETAIL FD-1.15)
I. OVERFLOW AS REQUIRED
J. DRAIN SIZE AS SPECIFIED
K. RECOMMENDED DRAIN LINE INSTALLATION

NOTES:
1. MATERIAL TO BE 14 GA. [1.9mm] STAINLESS STEEL
2. ENTIRE UNIT TO BE ALL WELDED COVE CORNERED CONSTRUCTION WITH VERTICAL AND HORIZONTAL AND INTERIOR CORNERS HAVING A 3/4" [20mm] RADIUS.
3. ENTIRE SINK COMPARTMENT TO BE PITCHED AND CREASED TO WASTE TO ASSURE COMPLETE DRAINING WITHOUT POOLING.

DETAIL #	DESCRIPTION:	
FD-4.5	WORK TABLE W/ SINK & UNDERSHELF	
	SCALE: 3/4" = 1'-0"	MATERIAL: 304 STAINLESS STEEL CONSTRUCTION

RJS + ASSOCIATES
INTEGRATED FOOD SERVICE DESIGN

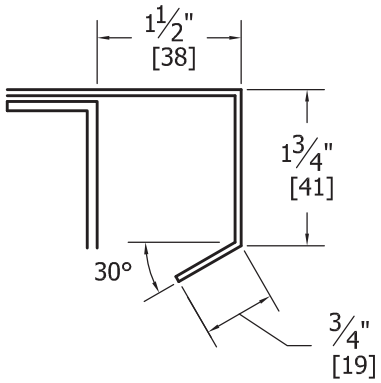

A TURN-DOWN

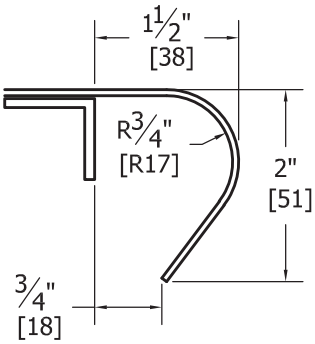

B BULLNOSE

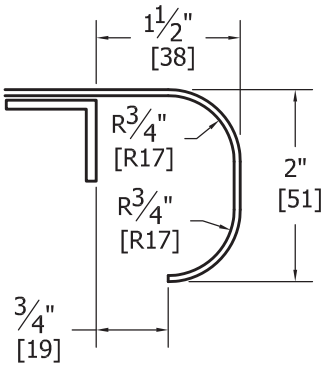

C ROLLED FLAT

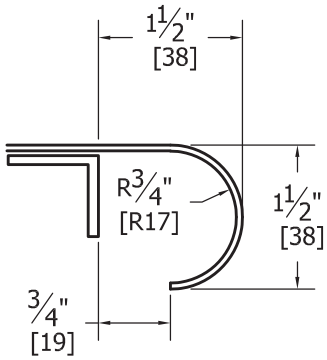

D ROLLED

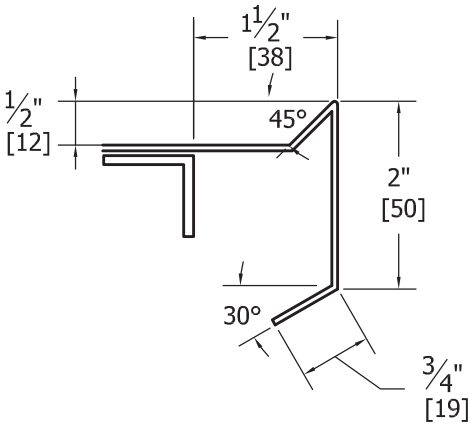

E DIE-CRIMPED

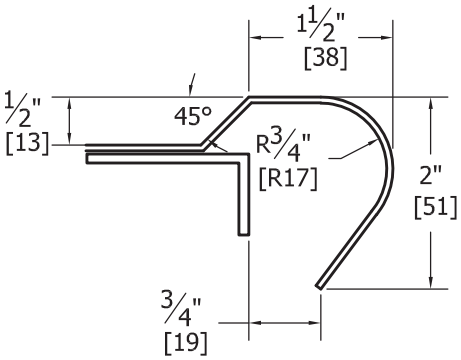

F MARINE-BULLNOSED

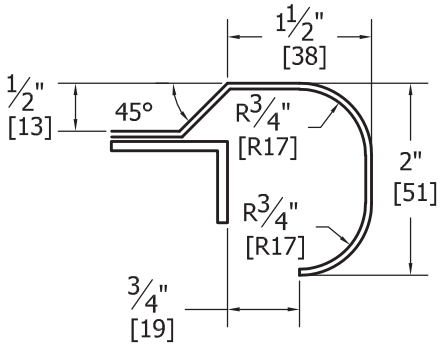

G MARINE-ROLLED FLAT

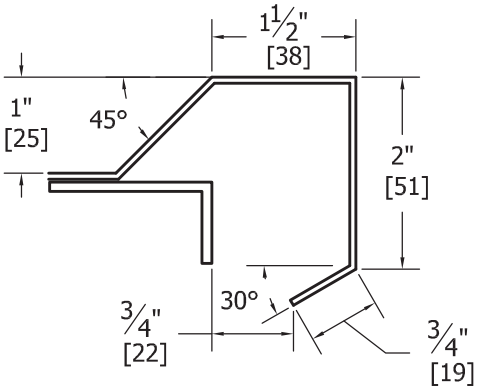

H MARINE

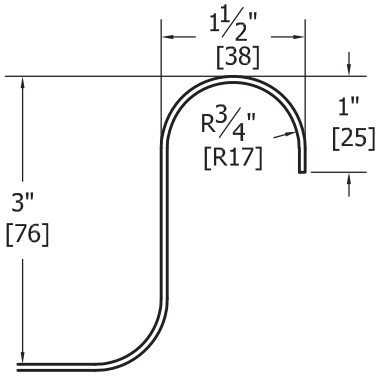

I RAISED ROLLED

DETAIL #	DESCRIPTION:	
FD-1.1	EDGES	
	SCALE: 6" = 1'-0"	MATERIAL: 304 STAINLESS STEEL CONSTRUCTION

RJS + ASSOCIATES
INTEGRATED FOOD SERVICE DESIGN

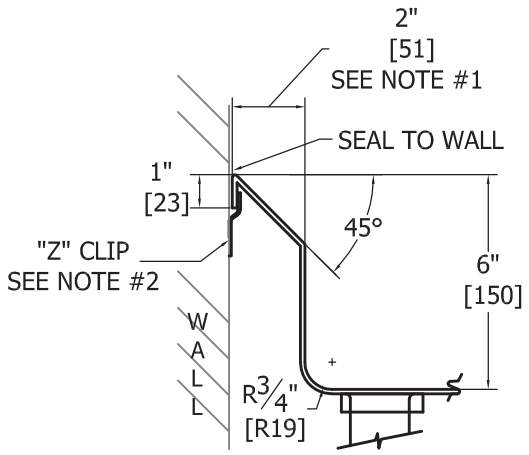

A STANDARD

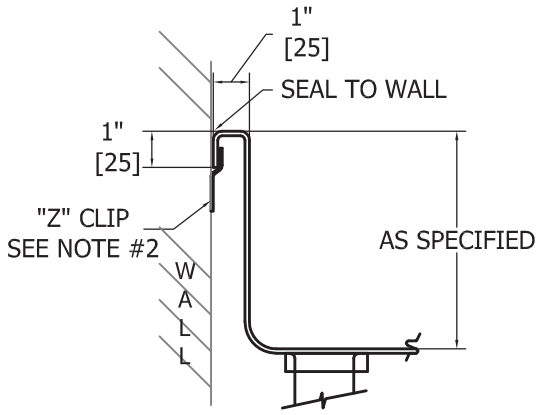

B SQUARE TURNBACK

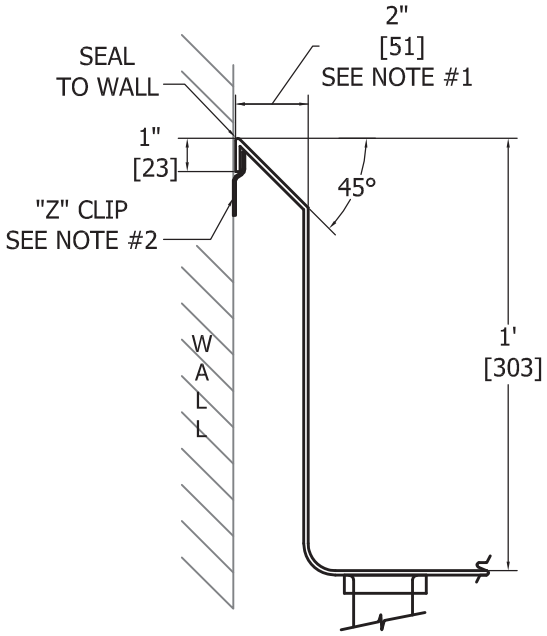

C STANDARD-INTERMEDIATE

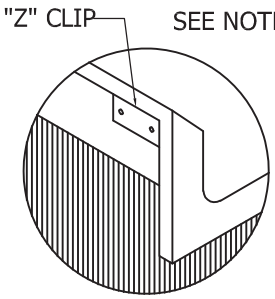

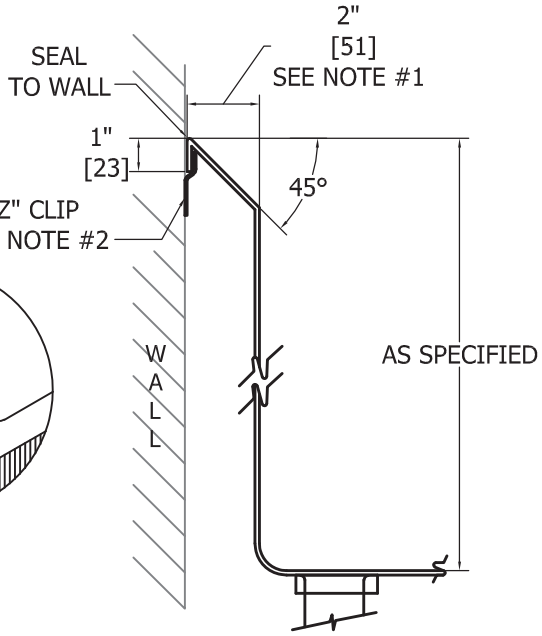

D STANDARD-EXTENDED

NOTES:

1. DEPTH INCREASED TO 2-1/2" [65mm] AT SINKS TO ALLOW FOR CONNECTED OVERFLOW.
2. 12 GA [2.7mm] S/S CLIP, 4" [100mm] LONG, FASTENED TO WALL AT EACH END OF UNIT AND 4'-0" [1200mm] O.C. SECURE TO WALL WITH A MINIMUM OF TWO. USE 1/4" [5mm] x 20 S/S BOLTS WITH TOGGLES OR EXPANSION SHIELDS.
3. EXPOSED ENDS TO BE ENCLOSED AND FULLY WELDED.
4. SEAL TO WALL ALL AROUND.

DETAIL #	DESCRIPTION:	
FD-1.2	SPLASHES	
	SCALE: N.T.S.	MATERIAL: 304 STAINLESS STEEL CONSTRUCTION

RJS + ASSOCIATES
INTEGRATED FOOD SERVICE DESIGN

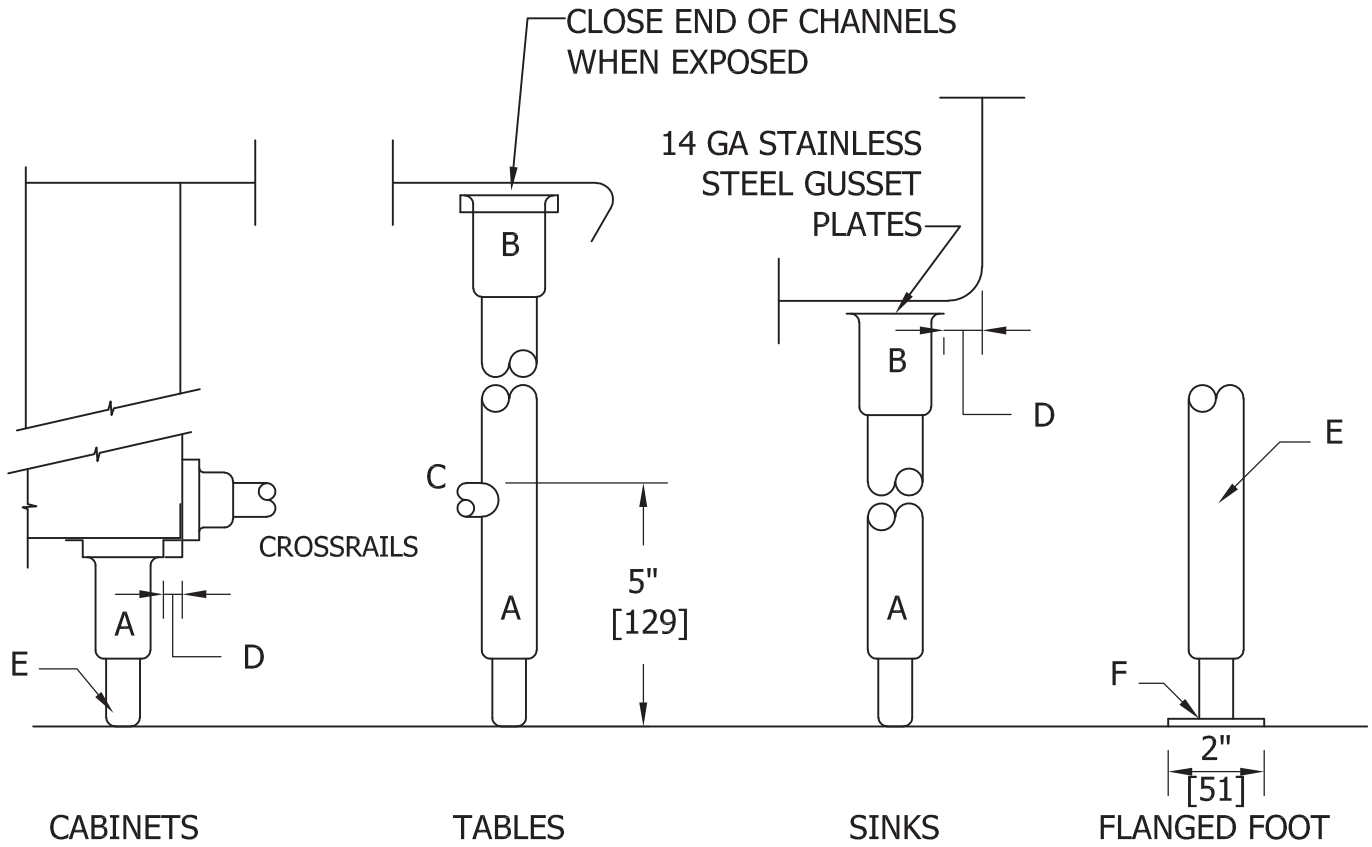

LEGEND:

A. LEGS TO BE 1⅝" O.D. 16 GA. [1.5mm] STAINLESS STEEL ASSEMBLY WITH BULLET FEET.
B. GUSSETS TO BE STAINLESS STEEL WITH SET SCREWS FOR SECURING LEGS.
FULLY WELD GRIND , SMOOTH AND POLISH GUSSETS TO CHANNELS OR GUSSET PLATES.
C. CROSSRAILS TO BE 1⅝" O.D. 16 GA. [1.5mm] STAINLESS STEEL TUBING FULLY WELDED TO LEGS. WHERE CROSSRAILS JOIN CABINET BODY, PROVIDE FLANGE SECURED WITH STAINLESS STEEL SCREWS.
D. 3/4" [20mm] MINIMUM CLEARANCE ALL AROUND.
E. FOOT SET AT MIDPOINT TO ALLOW 1"[25mm] ADJUSTMENT UP AND 1" [25mm] DOWN. WITHOUT THREAD EXPOSURE.
F. FLANGE FOOT TO FLOOR WITH COUNTERSUNK S/S BOLTS.

NOTE:
ENTIRE FINISHED STRUCTURE AND COMPONENTS TO MEET NSF REQUIREMENTS
MAINTAIN 6" [150mm] MINIMUM CLEARANCE BETWEEN FINISHED STRUCTURE & FLOOR.

DETAIL #	DESCRIPTION:	
FD-1.4	LEGS AND CROSSBRACING	
	SCALE: 3" = 1'-0"	MATERIAL: 304 STAINLESS STEEL CONSTRUCTION

RJS + ASSOCIATES
INTEGRATED FOOD SERVICE DESIGN

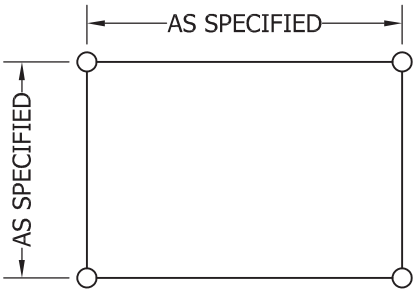

PLAN VIEW

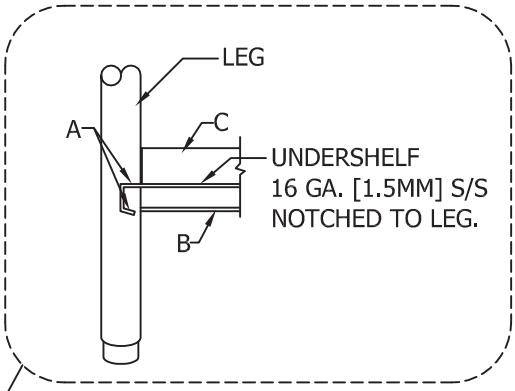

UNDERSHELF DETAIL

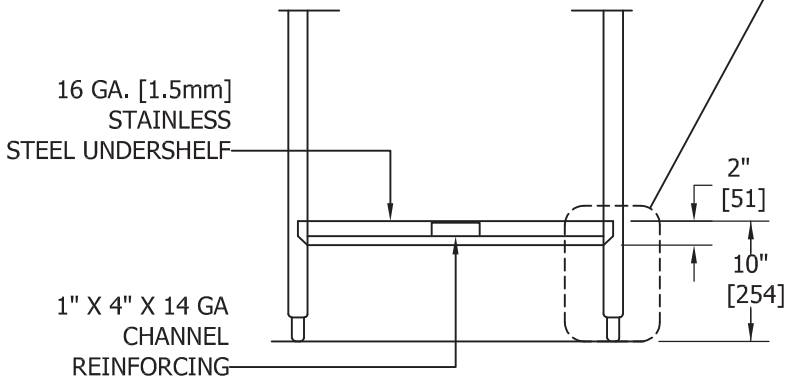

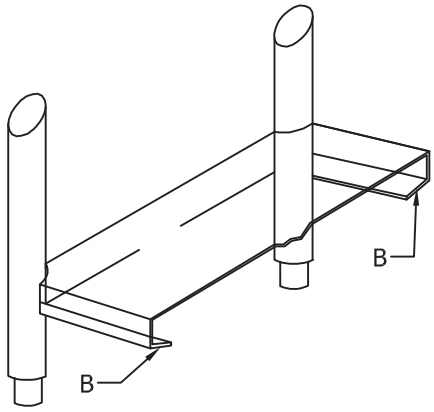

TYPICAL ISLAND APPLICATION

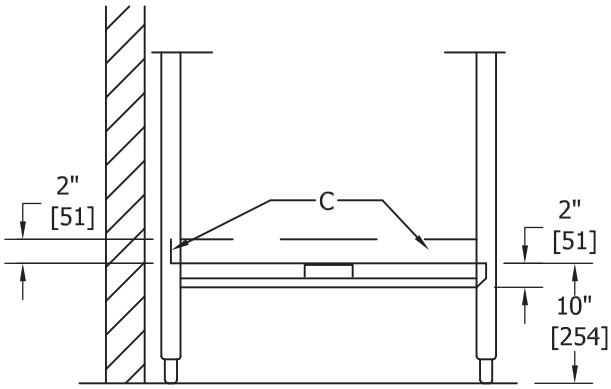

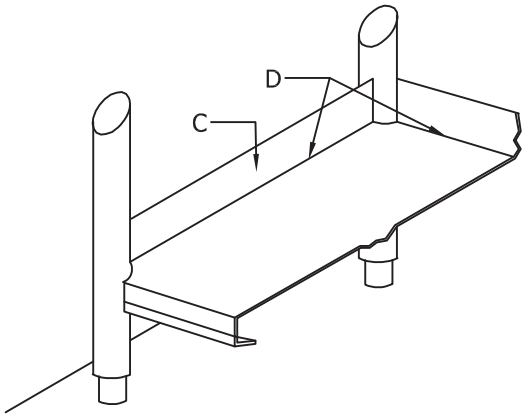

TYPICAL WALL APPLICATION

LEGEND:
A. FULLY WELD, GRIND, SMOOTH AND POLISH, WHEREVER SHELF INTERSECTS LEGS.
B. ISLAND TABLES, TURN DOWN ALL SIDES UNLESS OTHERWISE SPECIFIED.
C. TABLES AGAINST WALLS OR EQUIPMENT, TURN REAR AND ENDS AND SIDES UP 2" [50mm] UNLESS OTHERWISE SPECIFIED.
D. COVED BEND ACCEPTABLE, BUT NOT REQUIRED.

DETAIL #	DESCRIPTION:	
FD-1.8	UNDERSHELF	
	SCALE: 3/4" = 1'-0"	MATERIAL: 304 STAINLESS STEEL CONSTRUCTION

RJS + ASSOCIATES
INTEGRATED FOOD SERVICE DESIGN

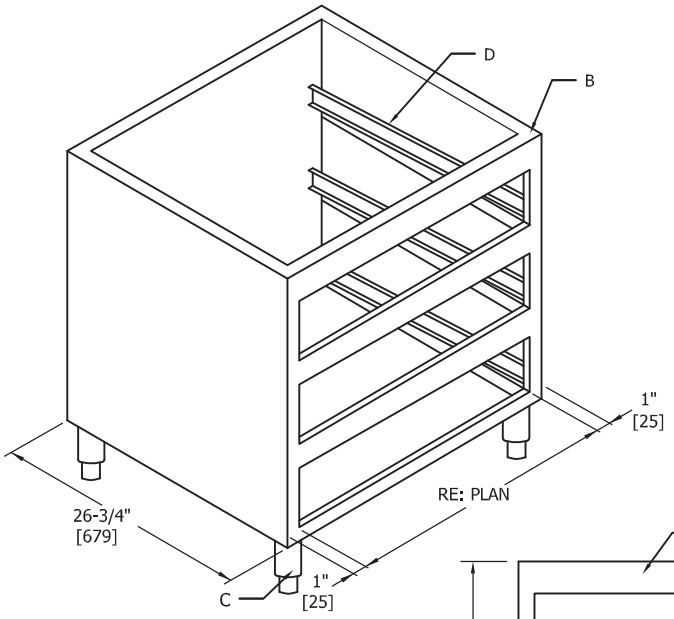

ISOMETRIC

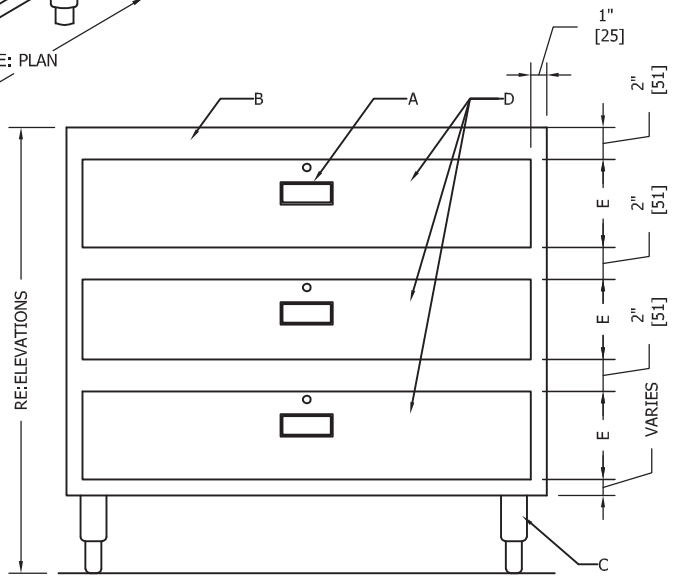

ELEVATION
THREE TIER

LEGEND:
A. RECESSED LOCK AND PULL OR AS SPECIFIED
B. 18 GA. [1.2mm] S/S HOUSING
C. ADJUSTABLE FEET
D. 18 GA. [1.2mm] DRAWERS W/ HEAVY DUTY GLIDES OR AS SPECIFIED
E. DRAWER SIZE VARIES DEPENDING ON QUANTITY

DETAIL #	DESCRIPTION:	
FD-1.5a	DRAWER ASSEMBLY	
	SCALE: 1" = 1'-0"	MATERIAL: 304 STAINLESS STEEL CONSTRUCTION

RJS + ASSOCIATES
INTEGRATED FOOD SERVICE DESIGN

ITEM# 17 - RANGE, 60", 6 BURNERS, 24" GRIDDLE (1 EA REQ'D)

Vulcan 60SC-6B24G

Endurance™ Restaurant Range, gas, 60", (6) 30,000 BTU burners with lift-off burner heads, (1) 24" manual griddle, 3/4" thick, 4" wide front grease trough, (1) standard oven base (left), (1) convection oven base (right), stainless steel front, sides, backriser & high shelf, fully MIG welded frame, 6" adjustable legs, 278,000 BTU, CSA Flame, CSA Star, NSF

ACCESSORIES

Mfr	Qty	Model	Spec
Vulcan	1		1 year limited parts & labor warranty, standard
Vulcan	1		Gas type to be specified
Vulcan	1		115v/60/1-ph, cord & plug, standard
Vulcan	1		Griddle on right side, standard
Vulcan	1		Note: The griddle being placed on the right will automatically move the 26" oven to the right
Vulcan	1		Stainless steel backriser & lift-off high shelf, standard
Vulcan	2	CASTERS-RR4	Casters, 5" (set of 4) (2 with locks) (quantity of 2 required)

Item # _____ C.S.I. Section 11420

RESTAURANT RANGES

ENDURANCE GAS RESTAURANT RANGE
6 OPEN BURNERS / 24" GRIDDLE
60" WIDE GAS RANGE

Model 60SS-6B24GN
(shown with optional casters)

- ☐ **60SS-6B24GN** 2 Standard Ovens / Natural Gas
- ☐ **60SS-6B24GP** 2 Standard Ovens / Propane
- ☐ **60SC-6B24GN** 1 Standard Oven / 1 Convection Oven Natural Gas
- ☐ **60SC-6B24GP** 1 Standard Oven / 1 Convection Oven Propane

STANDARD FEATURES

- Fully MIG welded frame
- Stainless steel front, sides, backriser, lift-off high shelf
- 6" stainless steel adjustable legs
- Six open top burners, each burner is 30,000 BTU/hr. with lift-off burner heads
- Shrouded flash tube pilot system (one pilot per two burners)
- Heavy duty cast grates, easy lift-off 12" x 12½" in front and 12" x 14½" in the rear
- 24" manual griddle, ⅞" thick, 4" wide front grease trough
- Extra deep pull out crumb tray with welded corners
- 23,000 BTU/hr. baker's depth oven cavity, full size sheet pans (18" x 26") fit front to back
- Oven thermostat adjusts from 250°F to 500°F
- Two oven racks and four rack positions for each oven
- Right oven: 35,000 BTU/hr. convection oven in place of standard oven 24"d x 26⅜"w x 13⅞"h (115v - 1 phase blower motor, 4 amp, 6' cord and plug, includes three oven racks. Full size sheet pans only fit side-to-side in convection oven. Convection oven motor requires field attachment.
- 1" rear gas connection and pressure regulator
- One year limited parts and labor warranty

SPECIFICATIONS

60" wide gas restaurant range, Vulcan Model No. 60SS-6B24GN. Fully MIG welded aluminized steel frame for added durability. Stainless steel front, sides, backriser, highshelf and 6" adjustable legs. Extra deep crumb tray with welded corners. Six 30,000 BTU/hr. open top burners with lift-off burner heads. Energy saving flashtube open burner ignition system (one pilot for every two burners) shrouded for reliability. Heavy duty cast grates, easy lift-off 12" x 12½" in the front and 12" x 14½" in the back to better accommodate stock pots or large pans. Grates have a built in aeration bowl for greater efficiency. 24" manual griddle, ⅞" thick, 4" wide front grease trough. Burner knobs are cool to the touch, high temperature material. Two ovens: left oven is 23,000 BTU/hr. bakers depth oven, measures 26¼"d x 20¼"w x 14"h. Right oven is 35,000 BTU/hr. bakers depth oven, measures 27"d x 26⅜"w x 14"h. Oven thermostat adjusts from 250°F to 500°F with a low setting. Each oven is supplied with two racks, two rack guide sets, and four rack positions. Oven doors are heavy duty with an integrated door hinge/spring mechanism requiring no adjustment. 1" rear gas connections with rear manifold and pressure regulator. Total input 278,000 BTU/hr.

Exterior Dimensions:
34"d x 60"w x 58"h on 6" adjustable legs

ACCESSORIES (Packaged & Sold Separately)

- ☐ Extra oven rack with rack guides
- ☐ Casters (set of eight)
- ☐ Leveling casters (set of eight)
- ☐ Flanged feet (set of eight)
- ☐ 10" stainless steel stub back
- ☐ Reinforced high shelf for mounting salamander broiler

OPTIONS (Factory Installed)

- ☐ Thermostatically controlled griddle (snap action)
- ☐ Flame Safety device with manual spark ignition for all open top burners, thermostatic griddles and oven pilots

a division of ITW Food Equipment Group LLC
P.O. Box 696 ▪ Louisville, KY 40201 ▪ Toll-free: 1-800-814-2028 ▪ Local: 502-778-2791 ▪ Quote & Order Fax: 1-800-444-0602

RESTAURANT RANGES

ENDURANCE GAS RESTAURANT RANGE
6 OPEN BURNERS / 24" GRIDDLE
60" WIDE GAS RANGE

INSTALLATION INSTRUCTIONS

1. A pressure regulator sized for this unit is included. Natural gas 5.0" W.C., propane gas 10.0" W.C.
2. Gas line connecting to range must be 1" or larger. If flexible connectors are used, the inside diameter must be 1" or larger.
3. An adequate ventilation system is required for commercial cooking equipment. Information may be obtained by writing to the National Fire Protection Association, 1 Batterymarch Park, Quincy, MA 02269, www.NFPA.org. When writing, refer to NFPA No. 96.
4. These units are manufactured for installation in accordance with ANSZ223.1A (latest edition), National Fuel Gas Code. Copies may be obtained from The American Gas Association, 400 N Capitol St. NW, Washington, DC 20001, www.AGA.org.
5. **Clearances**

	Rear	Sides
Combustible	6"	10"
Standard Oven Non-combustible	0"	0"
Convection Oven Non-combustible	Min. 4"	0"

6. For proper combustion, install equipment on adjustable legs or casters provided with unit.

NOTE: In line with its policy to continually improve its product, Vulcan reserves the right to change materials and specifications without notice.

Specify type of gas when ordering.
Specify altitude when above 2,000 feet.

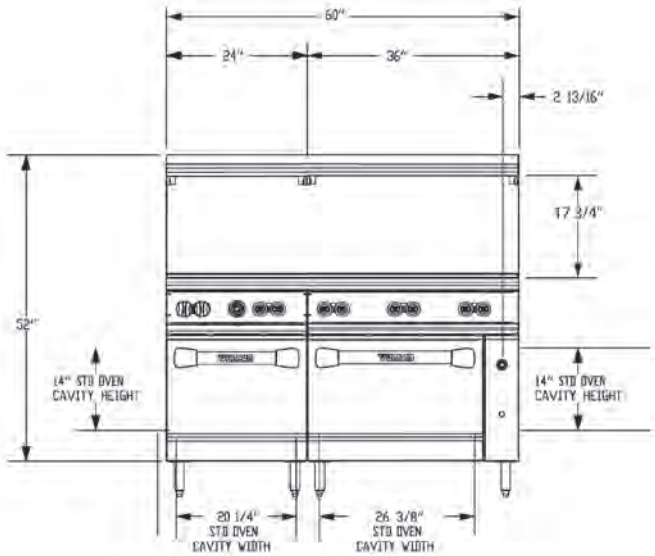

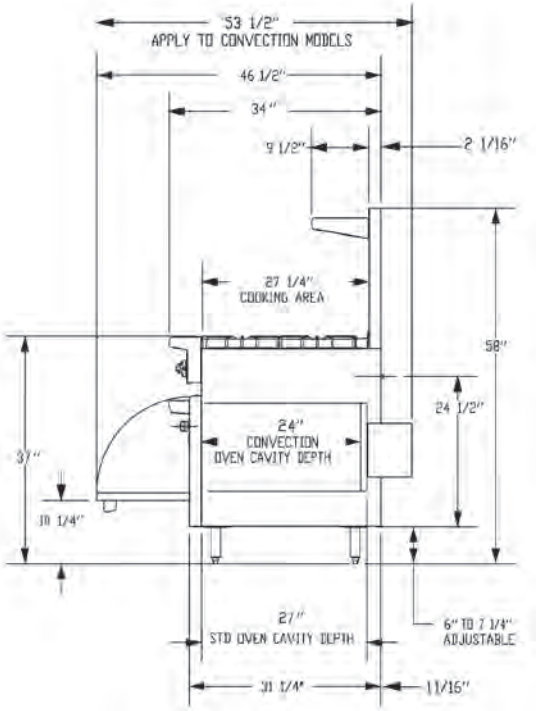

TOP CONFIGURATION	MODEL NUMBER	DESCRIPTION	TOTAL INPUT BTU / HR	SHIPPING WEIGHT LBS / KG
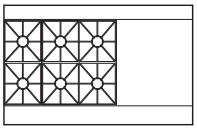	**60SS-6B24GN**	2 Standard Ovens / 6 Burners / 24" Griddle / Natural Gas	278,000	890 / 404
	60SS-6B24GP	2 Standard Ovens / 6 Burners / 24" Griddle / Propane	278,000	890 / 404
	60SC-6B24GP	1 Standard Oven / 1 Convection Oven / 6 Burners / 24" Griddle Natural Gas	278,000	950 / 431
	60SC-6B24GP	1 Standard Oven / 1 Convection Oven / 6 Burners / 24" Griddle Propane	278,000	950 / 431

This appliance is manufactured for commercial use only and is not intended for home use.

a division of ITW Food Equipment Group LLC
P.O. Box 696 ▪ Louisville, KY 40201 ▪ Toll-free: 1-800-814-2028 ▪ Local: 502-778-2791 ▪ Quote & Order Fax: 1-800-444-0602

RJS + ASSOCIATES
INTEGRATED FOOD SERVICE DESIGN

ITEM# 17A - BLUE HOSE GAS CONNECTOR KIT (1 KT REQ'D)

Dormont 16100KIT2S48PS

Dormont Blue Hose™ Moveable Gas Connector Kit, 1" inside dia., 48" long, covered with stainless steel braid, coated with blue antimicrobial PVC, (1) SnapFast® QD, (2) Swivel MAX®, (1) full port valve, (1) pair Safety Set® with hardware mounting options, limited lifetime warranty

Item #17A

16100KIT2S48PS

Dormont

RJS + Associates

Colchester Senior Center

Foodservice Moveable Equipment Installation Products

The Dormont Blue Hose™ is the heart of the Safety System, specifically engineered for caster-mounted commercial cooking equipment. The Blue Hose includes an antimicrobial protective PVC coating, and our Stress Guard® technology that makes the hose easier to install and dramatically reduces stress on the hose ends.

The fuel gas codes require the use of an ANSI Z21.69/CSA 6.16 moveable gas connector with all appliances that may or may not utilize casters and, under normal use, are moved on a regular basis for service, positioning or area cleanliness.

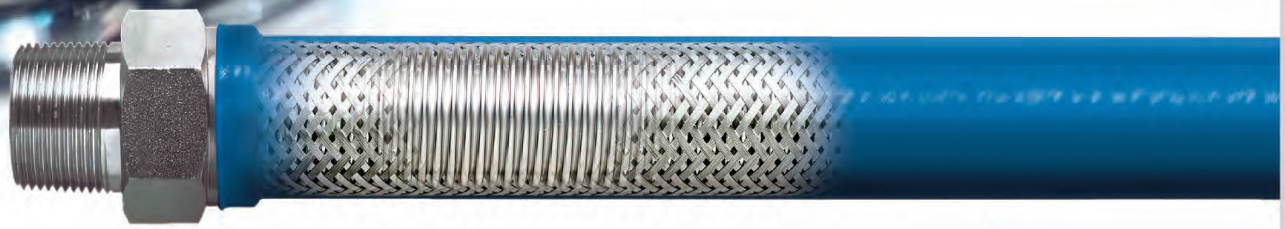

STRESS GUARD® TECHNOLOGY
Rotation technology reduces stress on both ends of the hose

Stainless Steel Construction
Heavy-duty, flexible, corrugated 304 stainless steel tubing

Stainless Steel Braid
Tight-weave braid prevents corrugations from stretching as equipment is moved

Antimicrobial PVC Coating
Inhibits growth of bacteria, mold and mildew on the gas connector

The Dormont Safety System™ is the first and only complete gas equipment connection system specifically engineered for the commercial kitchen. It is a complete system of connection products designed with the safety of your kitchen, the food you serve, your employees, and your business in mind.

The Safety System includes the famous Dormont Blue Hose and our exclusive safety-based fittings - the SnapFast quick-disconnect, the Safety Quik quick-disconnect valve, and the Swivel MAX. Safe, unique, and affordable, the Dormont Safety System provides peace of mind for the gas connections in your commercial kitchen.

Safety Quik
- Prevents user from turning on gas while appliance is disconnected
- Thermal shut-off when internal temperature exceeds 350°F (177°C)

SnapFast
- One-handed quick-disconnect fitting
- Thermal shut-off when internal temperature exceeds 350°F (177°C)

SwivelMAX
- Reduces stress on connector
- Increases kitchen aisle space by allowing connector to be positioned closer to the wall

Restraining Cable
- Prevents transmission of strain to connector
- Provided 1' shorter than the gas connector

Safety-Set
Always on the mark
- Ensures cooking equipment is always positioned in design-specified location
- Fast installation with choice of adhesive foam tape or thumbscrews

A Watts Water Technologies Company USA: 6015 Enterprise Drive, Export, PA 15632 • 1-800-DORMONT • Dormont.com

Dormont® Moveable Commercial Equipment Kits

KIT SOLUTIONS	50 = ½" ID 75 = ¾" ID 100 = 1" ID 125 = 1-¼" ID PART NUMBER	BTU/hr Minimum Flow Capacity*	THE BLUE HOSE™	SnapFast® QUICK-DISCONNECT	Swivel MAX® 1st SWIVEL	Swivel MAX® 2nd SWIVEL	Safety Quik® VALVE	RESTRAINING CABLE
Standard Kit (KIT)[1] The Dormont Blue Hose™ SnapFast Quick-Disconnect Restraining Cable	1650KIT36	77K	√	√				√
	1650KIT48	68K	√	√				√
	1650KIT60	60K	√	√				√
	1675KIT36	218K	√	√				√
	1675KIT48	180K	√	√				√
	1675KIT60	158K	√	√				√
	16100KIT36	379K	√	√				√
	16100KIT48	334K	√	√				√
	16100KIT60	294K	√	√				√
Single Swivel MAX Kit (KITS)[2] The Dormont Blue Hose™ SnapFast Quick-Disconnect One Swivel MAX Swivel Restraining Cable	1650KITS36	72K	√	√	√			√
	1650KITS48	63K	√	√	√			√
	1650KITS60	56K	√	√	√			√
	1675KITS36	203K	√	√	√			√
	1675KITS48	167K	√	√	√			√
	1675KITS60	147K	√	√	√			√
	16100KITS36	353K	√	√	√			√
	16100KITS48	310K	√	√	√			√
	16100KITS60	274K	√	√	√			√
Double Swivel MAX Kit (KIT2S)[3] The Dormont Blue Hose™ SnapFast Quick-Disconnect Two Swivel MAX Swivels Restraining Cable	1650KIT2S36	69K	√	√	√	√		√
	1650KIT2S48	60K	√	√	√	√		√
	1650KIT2S60	54K	√	√	√	√		√
	1675KIT2S36	193K	√	√	√	√		√
	1675KIT2S48	160K	√	√	√	√		√
	1675KIT2S60	140K	√	√	√	√		√
	16100KIT2S36	336K	√	√	√	√		√
	16100KIT2S48	295K	√	√	√	√		√
	16100KIT2S60	261K	√	√	√	√		√
Safety Quik Kit (KITCF)[4] The Dormont Blue Hose™ Safety Quik Quick-Disconnect Restraining Cable	1650KITCF36	77K	√				√	√
	1650KITCF48	68K	√				√	√
	1650KITCF60	60K	√				√	√
	1675KITCF36	218K	√				√	√
	1675KITCF48	180K	√				√	√
	1675KITCF60	158K	√				√	√
	16100KITCF36	379K	√				√	√
	16100KITCF48	334K	√				√	√
	16100KITCF60	294K	√				√	√
Safety Quik Single Swivel MAX Kit (KitCFS)[5]	1650KITCFS36	72K	√		√		√	√
	1650KITCFS48	63K	√		√		√	√
	1650KITCFS60	56K	√		√		√	√
	1675KITCFS36	203K	√		√		√	√
	1675KITCFS48	161K	√		√		√	√
	1675KITCFS60	147K	√		√		√	√
	16100KITCFS36	353K	√		√		√	√
	16100KITCFS48	310K	√		√		√	√
	16100KITCFS60	274K	√		√		√	√

[1] Includes Full Port Gas Valve and (2) 90° Street Elbows
[2] Includes Full Port Gas Valve and (1) 90° Street Elbow
[3] Includes Full Port Gas Valve
[4] Includes (2) 90° Street Elbows
[5] Includes (1) 90° Street Elbow

Indicates most commonly stocked item

*BTU/hr Minimum Flow Capacity (0.64 Sp.Gr., 1000 BTU/ft^3 Natural Gas at 0.5" wc pressure drop)

ADDITIONAL CONFIGURATIONS ARE AVAILABLE IN OUR CATALOG.

Add PS to the end of any part number to include the Safety-Set® wheel placement system

We guarantee our commercial gas connectors for the life of the original appliance to which it is connected.

S-D-BUYGUIDE 1538

RJS + ASSOCIATES
INTEGRATED FOOD SERVICE DESIGN

ITEM# 18 - MOBILE HEATED CABINET (1 EA REQ'D)

Hatco FSHC-7-1

Flav-R-Savor® Holding Cabinet, Mobile Heated, thermostatically-controlled heat, electrical components, water reservoir, insulated, (1) door, digital temperature readout, adjustable humidity & temperature, (7) adjustable removable slides for 18" x 26" or 12" x 20" pans, slides on 1-1/2" centers, large swivel casters with wheel locks, 1697 watts, NSF, CE, cULus, Made in USA

ACCESSORIES

Mfr	Qty	Model	Spec
Hatco	1		NOTE: Sale of this product must comply with Hatco's Minimum Resale Price Policy; consult order acknowledgement for details
Hatco	1		NOTE: Includes 24/7 parts & service assistance, call 800-558-0607
Hatco	1		One year on-site parts & labor warranty, plus one additional year parts only warranty on all Flav-R-Savor® metal sheathed air heating elements
Hatco	1		120v/60/1-ph, 1697 watts, 14.1 amps, NEMA 5-15P (domestic voltage), standard
Hatco	1	SILVER	Silver gray side panels (available at time of purchase only)
Hatco	1	SILVER	Silver gray top (available at time of purchase only)
Hatco	1	LPCAST	Casters, low profile in lieu of standard casters (for 32-3/4" H) (available at time of purchase only)

Project _____

Item # _____

Quantity _____

Flav-R-Savor®
Portable Holding Cabinets

Models: FSHC-6W1, -6W2
FSHC-7-1, -7-2

The Hatco Flav-R-Savor® Portable Holding Cabinet is capable of holding all types of hot foods at optimum serving temperatures. Thermostatically-controlled heat and humidity allow you to prepare food in advance of peak periods and hold it for hours. Perfect for schools, hospitals, concessions and cafeterias where backup food storage is needed.

FSHC-6W2 with accessory food pans

Two FSHC-7-1 with stacking kit and accessory food pans

Standard features

- FSHC-6W1 and -6W2 units are small enough to fit under normal kitchen counters when ordered with low profile casters
- Tray slides hold food pans on 3" (76 mm) centers or 1.5" (38 mm) centers, and can be removed easily for cleaning
- Accommodates Gastronorm pans
- FSHC-6W1 and -6W2 units have six sets of adjustable angle slides standard (pans not included)
- FSHC-7-1 and -7-2 units have seven sets of adjustable angle slides standard (pans not included)
- Adjustable humidity and temperature controls, digital temperature readout, insulated side walls, field reversible glass doors, large swivel casters with wheel locks, adjustable angle slides and 6' (1829 mm) recessed cord and plug are standard

Pan Capacity

Models FSHC-6W1 and -6W2 include six 18" W x 26" D (457 x 660 mm) sheet pans or six 2/1 Gastronorm pans on 3" (76 mm) centers, eleven 18" W x 26" D (457 x 660 mm) sheet pans¤, eleven 2/1 Gastronorm pans on 1.5" (38 mm) centers¤, or twelve 20" W x 12" D x 2.5" H (508 x 305 x 64 mm) hotel pans¤.

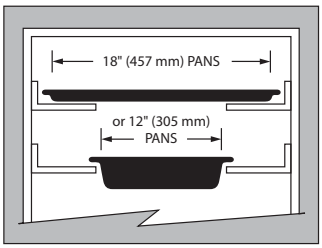

Models FSHC-7-1 and -7-2 include seven 18"W x 26"D (457 x 660 mm) sheet pans on 3" (76 mm) centers, fourteen 18"W x 26"D (457 x 660 mm) sheet pans, on 1.5" (38 mm) centers¤, or seven 20"W x 12"D x 2.5"H (508 x 305 x 64 mm) hotel pans, or seven 1/1 Gastronorm pans.

¤ With purchase of extra pan slides

WATER QUALITY REQUIREMENTS
Water supply in excess of 3.0 grains of hardness per gallon (GPG) (.75 grains of hardness per liter) must be treated and softened before being used. Water containing over 3.0 GPG (.75 GPL) will decrease the efficiency and reduce the operating life of the unit.
Note: Product failure caused by liming or sediment buildup is not covered under warranty.

Options (available at time of purchase only)

- ☐ Side Panels – Non-standard colors are non-returnable – Silver Gray standard
  ☐ *Designer* Black ☐ Stainless Steel
- ☐ Top – Non-standard colors are non-returnable – Silver Gray standard
  ☐ *Designer* Black ☐ Stainless Steel
- ☐ Stainless Steel Door in lieu of glass door
- ☐ Heavy-duty Stainless Steel Door with Positive Latch Handle
- ☐ Audible Low-Water Alarm (FSHC-7-1, -7-2 models only)
- ☐ 2" (51 mm) Low Profile Locking Casters in lieu of Standard Casters (2" [51 mm] diameter with 3" [76 mm] clearance)
- ☐ 4" (102 mm) Adjustable Legs in lieu of Standard Casters (FSHC-7-1, -7-2 models only)
- ☐ 6" (152 mm) Stainless Steel Legs in lieu of Standard Casters (FSHC-7-1, -7-2 models only)
- ☐ Stacking hardware mounted to top of cabinet for two units in lieu of casters – Silver Gray standard
- ☐ Bracket for Holding Cord During Transport

Accessories

- ☐ Extra Pan Slides
- ☐ Wire Shelf (FSHC-7-1, -7-2 models only)

IFS anti-microbial coatings use naturally-occurring, environmentally sustainable, silver ions to help inhibit the growth of microbes on the powder coated surface. See www.hatcocorp.com/antimicrobial-paint for more information.

For operation, location and safety information, please refer to the Installation and Operating Manual.

MADE IN THE USA

HATCO CORPORATION | P.O. Box 340500 Milwaukee, WI 53234-0500 U.S.A. | (800) 558-0607 | (414) 671-6350
www.hatcocorp.com | support@hatcocorp.com | Find a Hatco Rep | Image Library | Document Library | Chat

Flav-R-Savor® Portable Holding Cabinets

Models: FSHC-6W1, -6W2 FSHC-7-1, -7-2

FSHC-6W1, -6W2

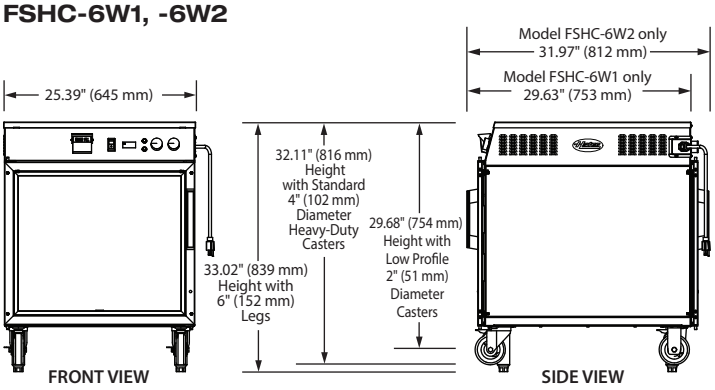

FSHC-7-1, -7-2

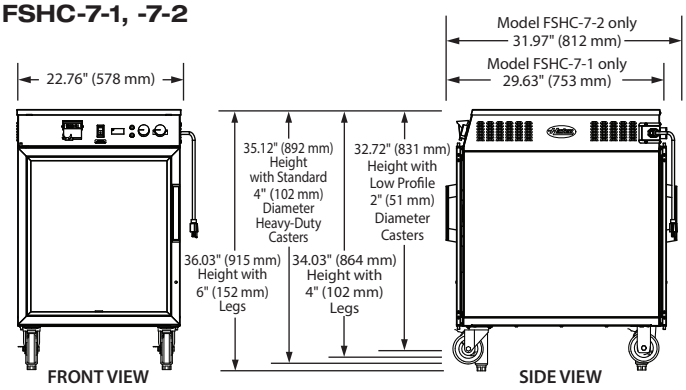

SPECIFICATIONS
Portable Holding Cabinets - Humidified

The shaded areas contain electrical information for International models

Model	Description	Dimensions (W x D x H)	Cabinet Opening (W x H)	Volts	Hertz	Watts	Amps	Plug	Ship Weight*
FSHC-6W1	Single Door with 6 Adjustable Angle Slides	25.39" x 29.63" x 32.11" (645 x 753 x 816 mm) on 4" (102 mm) casters	21.5" x 19" (546 x 482 mm)	120	60	1697	14.1	NEMA 5-15P▲	167 lbs. (76 kg)
				220	50	1697	7.7	CEE 7/7 Schuko	167 lbs. (76 kg)
				240	50	1697	7.1	BS-1363 or AS 3112	
				220-230 (CE)	50	1697-1850	7.7-8	CEE 7/7 Schuko	
				230-240 (CE)	50	1562-1697	6.8-7.1	BS-1363	
FSHC-6W2✚	Two Doors with 6 Adjustable Angle Slides	25.39" x 31.97" x 32.11" (645 x 812 x 816 mm) on 4" (102 mm) casters	21.5" x 19" (546 x 482 mm)	120	60	1697	14.1	NEMA 5-15P▲	180 lbs. (82 kg)
				220	50	1697	7.7	CEE 7/7 Schuko	180 lbs. (82 kg)
				240	50	1697	7.1	BS-1363 or AS 3112	
				220-230 (CE)	50	1697-1850	7.7-8	CEE 7/7 Schuko	
				230-240 (CE)	50	1562-1697	6.8-7.1	BS-1363	
FSHC-7-1	Single Door with 7 Adjustable Angle Slides	22.76" x 29.63" x 35.12" (578 x 753 x 892 mm) on 4" (102 mm) casters	18.5" x 22" (469 x 558 mm)	120	60	1697	14.1	NEMA 5-15P▲	175 lbs. (80 kg)
				220	50	1697	7.7	CEE 7/7 Schuko	175 lbs. (80 kg)
				240	50	1697	7.1	BS-1363 or AS 3112	
				220-230 (CE)	50	1697-1850	7.7-8	CEE 7/7 Schuko	
				230-240 (CE)	50	1562-1697	6.8-7.1	BS-1363	
FSHC-7-2✚	Two Door with 7 Adjustable Angle Slides	22.76" x 31.97" x 35.12" (578 x 812 x 892 mm) on 4" (102 mm) casters	18.5" x 22" (469 x 558 mm)	120	60	1697	14.1	NEMA 5-15P▲	180 lbs. (82 kg)
				220	50	1697	7.7	CEE 7/7 Schuko	180 lbs. (82 kg)
				240	50	1697	7.1	BS-1363 or AS 3112	
				220-230 (CE)	50	1697-1850	7.7-8	CEE 7/7 Schuko	
				230-240 (CE)	50	1562-1697	6.8-7.1	BS-1363	

* Shipping weight includes packaging.
▲ Canada, use NEMA 5-20P.
✚ Two-door pass-though single cabinet, not two units stacked.

WATER CAPACITY
¾ gallon (2.8 liters).

CORD LOCATION
Back of unit, top right side.

TOP SURFACE DIMENSIONS
FSHC-6W1, -6W2: 25.39"W x 25.87"D (645 x 657 mm).
FSHC-7-1, -7-2: 22.64"W x 25.87"D (575 x 657 mm).

PLUG CONFIGURATIONS

NEMA 5-15P

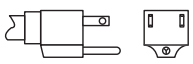

NEMA 5-20P

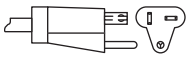

CEE 7/7 Schuko

BS-1363

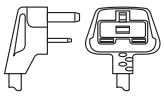

AS 3112

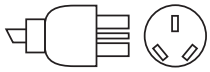

PRODUCT SPECS
Humidified Portable Holding Cabinets

The humidity-controlled heated Portable Holding Cabinet shall be a Flav-R-Savor® Model ... , rated at ... volts, and ... watts, as manufactured by the Hatco Corporation, Milwaukee, WI 53234 U.S.A.

The cabinet shall have ... door(s), tray slides (or holding rack), insulated side walls, 4" (102 mm) swivel casters with wheel locks or 4" (102 mm) legs, and a 6' (1829 mm) cord and plug. It shall include a water reservoir, humidity selector switch, temperature selector dial, On/Off switch, and indicating lights.

Accessories shall include sheet pans, extra pan slides, bumper kit, and wire shelf.

Warranty consists of 24/7 parts and service assistance (US and Canada only).

HATCO CORPORATION | P.O. Box 340500 Milwaukee, WI 53234-0500 U.S.A. | (800) 558-0607 | (414) 671-6350

www.hatcocorp.com | support@hatcocorp.com | Find a Hatco Rep | Image Library | Document Library | Chat

RJS + ASSOCIATES
INTEGRATED FOOD SERVICE DESIGN

ITEM# 19 - CONVECTION OVEN, GAS (1 EA REQ'D)

Vulcan VC44GD

Convection Oven, gas, double-deck, standard depth, solid state controls, electronic spark igniters, 60 minute timer, (5) nickel plated racks per oven, 8" high legs, stainless steel front, top & sides, stainless steel doors with windows, (2) 50,000 BTU, NSF, CSA Star, CSA Flame, ENERGY STAR®

ACCESSORIES

Mfr	Qty	Model	Spec
Vulcan	1		1 year limited parts & labor warranty, standard
Vulcan	1		Gas type to be specified
Vulcan	1		(2) 120v/60/1-ph, 15.4 amps total, (2) cords with plugs, standard
Vulcan	1		Gas manifold piping included with stacking kit to provide single point gas connection

Item # _____ C.S.I. Section 11420

O V E N S

VC44G SERIES
DOUBLE DECK GAS CONVECTION OVENS

Model VC44GD
shown with optional casters

SPECIFICATIONS

Double section gas convection oven, Vulcan-Hart Model No. (VC44GD) (VC44GC). Stainless steel front, sides, top and legs. Independently operated stainless steel doors with double pane windows. Non-sag insulation applied to the top, rear, sides, bottom and doors. Porcelain enamel on steel oven interiors measures 29"w x 22⅛"d x 20"h. Two interior oven lights per section. Five nickel plated oven racks per section measure 28¼" x 20½". Eleven position nickel plated rack guides with positive rack stops. One 50,000 BTU/hr. burner per section. 100,000 total BTU/hr. Electronic spark igniters. Furnished with a two speed ½ H.P. oven blower-motor per section. Oven cool switch for rapid cool down. 120 volt, 60 Hz, 1 ph power supply required. 6' cord and plug. 7.7 amps total draw per section.

Exterior Dimensions:

40¼"w x 41⅛"d (includes motor & door handles) 37¾"d (includes motor only) x 70"h on 8" legs.

CSA design certified. NSF listed.

SPECIFY TYPE OF GAS WHEN ORDERING.
SPECIFY ALTITUDE WHEN ABOVE 2,000 FT.

☐ **VC44GD** Solid state temperature controls adjust from 150° to 500°F. 60 minute timer with audible alarm.

☐ **VC44GC** Computer controls with digital time and temperature readouts. 99-hour timer with audible alarm. Roast and Hold cycle. One hundred programmable menu selections. Shelf I.D. programming.

Double deck ovens are supplied as separate units with a stacking kit.

STANDARD FEATURES

- Stainless steel front, sides, top and legs.
- Independently operated stainless steel doors with double pane windows.
- 50,000 BTU/hr. burner per section, 100,000 BTU/hr. total.
- Electronic spark igniters.
- ½ H.P. two speed oven blower-motor. 120/60/1 with 6' cord and plug. 7.7 amps per section. 15.4 amps total draw.
- Oven cool switch for rapid cool down.
- Porcelain enamel on steel oven interior.
- Five nickel plated oven racks with eleven rack positions per section.
- ¾" rear gas connection with combination gas pressure regulator and safety solenoid system.
- One year limited parts and labor warranty.

OPTIONS

☐ Kosher friendly control package.
☐ Complete prison package.
  ☐ Security screws only.
☐ 208V or 240V, 60 Hz, 1 ph, two speed, ½ H.P. blower motor. 208V, 4.2 amps; 240V, 3.6 amps.
☐ Casters.
☐ Simultaneous chain driven doors.
☐ Control panel mounted on left side of oven.
☐ Stainless steel rear enclosure.
☐ Second year extended limited parts and labor warranty.

ACCESSORIES

☐ Extra oven rack(s).
☐ Rack hanger(s).
☐ Stainless steel drip pan.
☐ Flexible gas hose with quick disconnect and restraining device. Consult price book for available sizes.
☐ Down draft flue diverter for direct vent connection.

a division of ITW Food Equipment Group LLC
P.O. Box 696 ■ Louisville, KY 40201 ■ Toll-free: 1-800-814-2028 ■ Local: 502-778-2791 ■ Quote & Order Fax: 1-800-444-0602

OVENS

VC44G SERIES
DOUBLE DECK GAS CONVECTION OVENS

INSTALLATION INSTRUCTIONS

1. A combination gas pressure regulator and safety solenoid system is included in this unit. Natural gas is 5.0" W.C., Propane gas is 10.0" W.C.
2. An adequate ventilation system is required for commercial cooking equipment. Information may be obtained by writing to the National Fire Protection Association, Batterymarch Park, Quincy, MA 02289. When writing, refer to NFPA No. 96.
3. These units are manufactured for installation in accordance with ANSZ223.1 (latest edition), National Fuel Gas Code. Copies may be obtained from American Gas Association Inc., Accredited Standards Committee Z223, 400 N. Capitol St. NW, Washington, DC 20001 or the Secretary Standards Council, NFPA, 1 Batterymarch Park, Quincy, MA 02169-7471.
4. Clearances:

	Combustible	Non-combustible
Rear	0"	0"
Right Side	2"	0"
Left Side	1"	0"

5. This appliance is manufactured for commercial installation only and is not intended for home use.

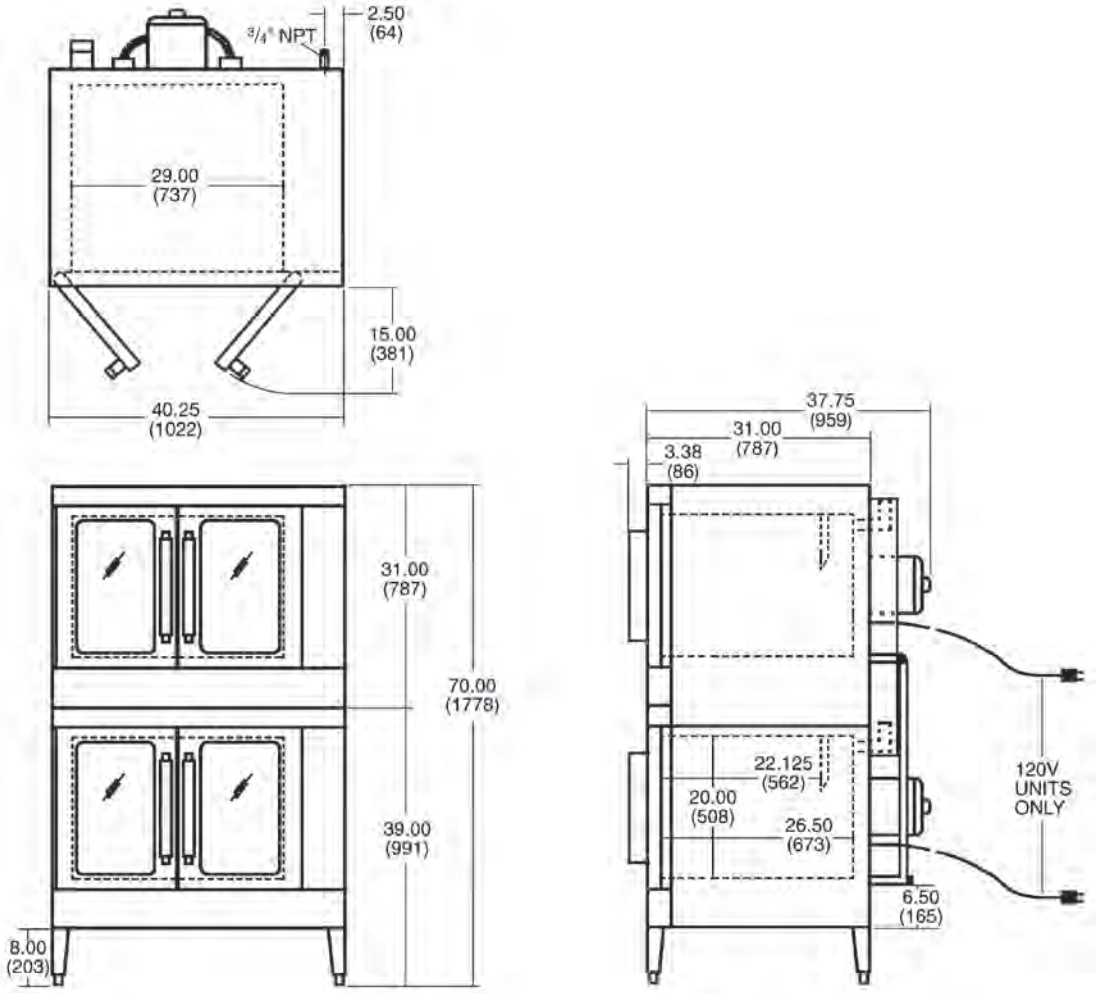

MODEL NO.	WIDTH	DEPTH (INCLUDES HANDLES)	HEIGHT	BTU/HR. PER OVEN	TOTAL BTU/HR.	ELECTRICAL	WEIGHT			
							WITH SKIDS & PACKAGING		WITHOUT SKIDS & PACKAGING	
							LBS.	KG	LBS.	KG
VC44G	40¼"	41⅛"	70"	50,000	100,000	120/60/1	928	422	820	372

a division of ITW Food Equipment Group LLC

P.O. Box 696 ▪ Louisville, KY 40201 ▪ Toll-free: 1-800-814-2028 ▪ Local: 502-778-2791 ▪ Quote & Order Fax: 1-800-444-0602

RJS + ASSOCIATES
INTEGRATED FOOD SERVICE DESIGN

ITEM# 19A - BLUE HOSE GAS CONNECTOR KIT (1 KT REQ'D)

Dormont 1675KIT2S48PS

Dormont Blue Hose™ Moveable Gas Connector Kit, 3/4" inside dia., 48" long, covered with stainless steel braid, coated with blue antimicrobial PVC, (1) SnapFast® QD, (2) Swivel MAX®, (1) full port valve, (1) Snap'N Go, (1) pair Safety Set® with hardware mounting options, limited lifetime warranty

Item #19A

1675KIT2S48PS

Dormont

RJS + Associates

Colchester Senior Center

Dormont®

Foodservice Moveable Equipment Installation Products

The Dormont Blue Hose™ is the heart of the Safety System, specifically engineered for caster-mounted commercial cooking equipment. The Blue Hose includes an antimicrobial protective PVC coating, and our Stress Guard® technology that makes the hose easier to install and dramatically reduces stress on the hose ends.

The fuel gas codes require the use of an ANSI Z21.69/CSA 6.16 moveable gas connector with all appliances that may or may not utilize casters and, under normal use, are moved on a regular basis for service, positioning or area cleanliness.

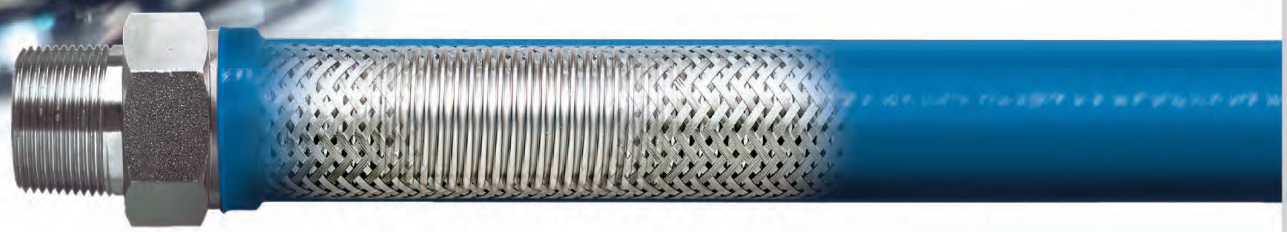

STRESS GUARD® TECHNOLOGY

Rotation technology reduces stress on both ends of the hose

Stainless Steel Construction
Heavy-duty, flexible, corrugated 304 stainless steel tubing

Stainless Steel Braid
Tight-weave braid prevents corrugations from stretching as equipment is moved

Antimicrobial PVC Coating
Inhibits growth of bacteria, mold and mildew on the gas connector

The Dormont Safety System™ is the first and only complete gas equipment connection system specifically engineered for the commercial kitchen. It is a complete system of connection products designed with the safety of your kitchen, the food you serve, your employees, and your business in mind.

The Safety System includes the famous Dormont Blue Hose and our exclusive safety-based fittings - the SnapFast quick-disconnect, the Safety Quik quick-disconnect valve, and the Swivel MAX. Safe, unique, and affordable, the Dormont Safety System provides peace of mind for the gas connections in your commercial kitchen.

Safety Quik

- Prevents user from turning on gas while appliance is disconnected
- Thermal shut-off when internal temperature exceeds 350°F (177°C)

SnapFast

- One-handed quick-disconnect fitting
- Thermal shut-off when internal temperature exceeds 350°F (177°C)

SwivelMAX

- Reduces stress on connector
- Increases kitchen aisle space by allowing connector to be positioned closer to the wall

Restraining Cable

- Prevents transmission of strain to connector
- Provided 1' shorter than the gas connector

Safety-Set
Always on the mark

- Ensures cooking equipment is always positioned in design-specified location
- Fast installation with choice of adhesive foam tape or thumbscrews

A Watts Water Technologies Company USA: 6015 Enterprise Drive, Export, PA 15632 • 1-800-DORMONT • Dormont.com

Dormont® Moveable Commercial Equipment Kits

KIT SOLUTIONS	50 = ½" ID 75 = ¾" ID 100 = 1" ID 125 = 1-¼" ID PART NUMBER	BTU/hr Minimum Flow Capacity*	THE BLUE HOSE™	SnapFast® QUICK-DISCONNECT	Swivel MAX® 1st SWIVEL	Swivel MAX® 2nd SWIVEL	Safety Quik® VALVE	RESTRAINING CABLE
Standard Kit (KIT)[1] The Dormont Blue Hose™ SnapFast Quick-Disconnect Restraining Cable	1650KIT36	77K	√	√				√
	1650KIT48	68K	√	√				√
	1650KIT60	60K	√	√				√
	1675KIT36	218K	√	√				√
	1675KIT48	180K	√	√				√
	1675KIT60	158K	√	√				√
	16100KIT36	379K	√	√				√
	16100KIT48	334K	√	√				√
	16100KIT60	294K	√	√				√
Single Swivel MAX Kit (KITS)[2] The Dormont Blue Hose™ SnapFast Quick-Disconnect One Swivel MAX Swivel Restraining Cable	1650KITS36	72K	√	√	√			√
	1650KITS48	63K	√	√	√			√
	1650KITS60	56K	√	√	√			√
	1675KITS36	203K	√	√	√			√
	1675KITS48	167K	√	√	√			√
	1675KITS60	147K	√	√	√			√
	16100KITS36	353K	√	√	√			√
	16100KITS48	310K	√	√	√			√
	16100KITS60	274K	√	√	√			√
Double Swivel MAX Kit (KIT2S)[3] The Dormont Blue Hose™ SnapFast Quick-Disconnect Two Swivel MAX Swivels Restraining Cable	1650KIT2S36	69K	√	√	√	√		√
	1650KIT2S48	60K	√	√	√	√		√
	1650KIT2S60	54K	√	√	√	√		√
	1675KIT2S36	193K	√	√	√	√		√
	1675KIT2S48	160K	√	√	√	√		√
	1675KIT2S60	140K	√	√	√	√		√
	16100KIT2S36	336K	√	√	√	√		√
	16100KIT2S48	295K	√	√	√	√		√
	16100KIT2S60	261K	√	√	√	√		√
Safety Quik Kit (KITCF)[4] The Dormont Blue Hose™ Safety Quik Quick-Disconnect Restraining Cable	1650KITCF36	77K	√				√	√
	1650KITCF48	68K	√				√	√
	1650KITCF60	60K	√				√	√
	1675KITCF36	218K	√				√	√
	1675KITCF48	180K	√				√	√
	1675KITCF60	158K	√				√	√
	16100KITCF36	379K	√				√	√
	16100KITCF48	334K	√				√	√
	16100KITCF60	294K	√				√	√
Safety Quik Single Swivel MAX Kit (KitCFS)[5]	1650KITCFS36	72K	√		√		√	√
	1650KITCFS48	63K	√		√		√	√
	1650KITCFS60	56K	√		√		√	√
	1675KITCFS36	203K	√		√		√	√
	1675KITCFS48	161K	√		√		√	√
	1675KITCFS60	147K	√		√		√	√
	16100KITCFS36	353K	√		√		√	√
	16100KITCFS48	310K	√		√		√	√
	16100KITCFS60	274K	√		√		√	√

[1] Includes Full Port Gas Valve and (2) 90° Street Elbows
[2] Includes Full Port Gas Valve and (1) 90° Street Elbow
[3] Includes Full Port Gas Valve
[4] Includes (2) 90° Street Elbows
[5] Includes (1) 90° Street Elbow

Indicates most commonly stocked item

*BTU/hr Minimum Flow Capacity (0.64 Sp.Gr., 1000 BTU/ft^3 Natural Gas at 0.5" wc pressure drop)

ADDITIONAL CONFIGURATIONS ARE AVAILABLE IN OUR CATALOG.

Add PS to the end of any part number to include the Safety-Set® wheel placement system

GAS CONNECTOR LIFETIME WARRANTY

We guarantee our commercial gas connectors for the life of the original appliance to which it is connected.

S-D-BUYGUIDE 1538

RJS + ASSOCIATES
INTEGRATED FOOD SERVICE DESIGN

ITEM# 20 - SPARE NO.

<Spare No.>

RJS + ASSOCIATES
INTEGRATED FOOD SERVICE DESIGN

ITEM# 21 - EXHAUST HOOD (1 EA REQ'D)

Captive-Aire ND2

The model ND-2 is an exhaust only canopy hood rated for all types of cooking equipment. The hood shall have the size, shape and performance specified on drawings.

Construction shall be type 430 stainless steel, with a #3 or #4 polish where exposed. The manufacturer, ETL and NSF shall determine the individual component construction. Construction shall be dependent on the structural application to minimize distortion and other defects. All seams, joints and penetrations of the hood enclosure to the lower outermost perimeter that directs and captures grease-laden vapor and exhaust gases
shall have a liquid-tight continuous external weld in accordance with NFPA 96. The hood shall be wall type with a minimum of four connections for hanger rods. Connectors shall have 9/16" holes pre-punched in 1 ½" x 1 ½" angle iron at the factory to allow for hanger rod connection by others.

The hood shall be furnished with U.L. classified filters, supplied in size and quantity as required by ventilator.

The hood manufacturer shall supply complete computer generated submittal drawings including hood sections view(s) and hood plan view(s). These drawings must be available to the engineer, architect and owner for their use in construction, operation and maintenance.

Exhaust duct collar to be 4" high with 1" flange. Duct sizes, CFM and static pressure requirements shall be as shown on drawings. Static pressure requirements shall be precise and accurate; air velocity and volume information shall be accurate within 1-ft increments along the length of the ventilator.

U.L. incandescent light fixtures and globes shall be installed and pre-wired to a junction box. The light fixtures shall be installed with a maximum of 4’0" spacing on center and allow up to a 100 watt standard light bulb.

The hood shall have:
• A double wall insulated front to eliminate condensation and increase rigidity. The insulation shall have a flexural modulus of 475 EI, meet UL 181 requirements and be in accordance with NFPA 90A and 90B.
• An integral front baffle to direct grease laden vapors toward the exhaust filter bank.
• A built-in wiring chase provided for outlets and electrical controls on the hood face and shall not penetrate the capture area or require an external chase way.
• Removable grease cup for easy cleaning.
The hood shall be ETL Listed as "Exhaust Hood Without Exhaust Damper", NSF Listed and built in accordance with NFPA 96. The hood shall be listed for 450°F cooking surfaces at 150 CFM/ft, 600°F cooking surfaces at 200 CFM/ft, and 700°F cooking surfaces at 250 CFM/ft. The hood shall be ETL Listed as "Exhaust Hood Without Exhaust Damper".

Optional Features
• Utility Cabinet
• ETL Listed Exhaust Fire Damper
• End Panels
• Enclosure Panels
• Fully Integrated Self Cleaning Options

CAPTIVEAIRE

COMMERCIAL KITCHEN VENTILATION www.captiveaire.com

Model ND-2 Specification

The model ND-2 is an exhaust only canopy hood rated for all types of cooking equipment. The hood shall have the size, shape and performance specified on drawings.

Construction shall be type 430 stainless steel, with a #3 or #4 polish where exposed. The manufacturer, ETL and NSF shall determine the individual component construction. Construction shall be dependent on the structural application to minimize distortion and other defects. All seams, joints and penetrations of the hood enclosure to the lower outermost perimeter that directs and captures grease-laden vapor and exhaust gases shall have a liquid-tight continuous external weld in accordance with NFPA 96. The hood shall be wall type with a minimum of four connections for hanger rods. Connectors shall have 9/16" holes pre-punched in 1 ½" x 1 ½" angle iron at the factory to allow for hanger rod connection by others.

The hood shall be furnished with U.L. classified filters, supplied in size and quantity as required by ventilator.

The hood manufacturer shall supply complete computer generated submittal drawings including hood sections view(s) and hood plan view(s). These drawings must be available to the engineer, architect and owner for their use in construction, operation and maintenance.

Exhaust duct collar to be 4" high with 1" flange. Duct sizes, CFM and static pressure requirements shall be as shown on drawings. Static pressure requirements shall be precise and accurate; air velocity and volume information shall be accurate within 1-ft increments along the length of the ventilator.

U.L. incandescent light fixtures and globes shall be installed and pre-wired to a junction box. The light fixtures shall be installed with a maximum of 4’0" spacing on center and allow up to a 100 watt standard light bulb.

The hood shall have:

- A double wall insulated front to eliminate condensation and increase rigidity. The insulation shall have a flexural modulus of 475 EI, meet UL 181 requirements and be in accordance with NFPA 90A and 90B.
- An integral front baffle to direct grease laden vapors toward the exhaust filter bank.
- A built-in wiring chase provided for outlets and electrical controls on the hood face and shall not penetrate the capture area or require an external chase way.
- Removable grease cup for easy cleaning.

The hood shall be ETL Listed as "Exhaust Hood Without Exhaust Damper", NSF Listed and built in accordance with NFPA 96. The hood shall be listed for 450°F cooking surfaces at 150 CFM/ft, 600°F cooking surfaces at 200 CFM/ft, and 700°F cooking surfaces at 250 CFM/ft. The hood shall be ETL Listed as "Exhaust Hood Without Exhaust Damper".

Optional Features

- Utility Cabinet
- ETL Listed Exhaust Fire Damper
- End Panels
- Enclosure Panels
- Fully Integrated Self Cleaning Options

INTERTEK ETL LISTED C US

Suggested Specifications

CAPTIVEAIRE
COMMERCIAL KITCHEN VENTILATION www.captiveaire.com

Integrated Suggested Specifications:

Aerodynamic Grease Trough
Fully welded grease sub-assembly and a deep grease trough allows for easy cleaning. Grease trough shall be integrated into the hood to ensure smooth effluent transition from appliance to filter.

Clearance Reduction System
Hood shall be provided with an integral front and rear clearance to combustibles reduction system.

Insulated Hood Front
Hood shall be fabricated with a double-wall, insulated front for increased rigidity and reduced condensation.

Riser
Hood shall accommodate up to a 16” riser.

Filter Options
The filters shall be constructed of stainless steel and shall be NSF and UL or ETL classified. Various types of filters are available based on cooking application. For lower grease applications, filters should extract up to 85% of grease particles over 8 microns. For heavy grease applications, filters should extract up to 90% of grease particles at 2 microns.

Wiring Chase
A built-in wiring chase shall be provided for optimal positioning of electrical controls and outlets on the front face of the hood without penetrating the capture area or requiring an external chase way.

Exhaust Rates
ETL Listed for 450°F, 600°F and 700°F cooking surfaces (File 3054804-001 without exhaust damper; File 3054804-002 with exhaust damper), NSF Listed and built in accordance with NFPA Standard 96.

Optional Suggested Specifications:

Compact Fluorescent Lights
Fitted with UL Listed, pre-wired, incandescent light fixtures and tempered glass to hold up to a standard 100-watt bulb. Factory pre-wired lighting shall be accessible from the bottom of the hood. Factory installed energy efficient fluorescent bulbs to illuminate cooking surface.

CORE Protection
Hood to ship with UL-300 integral plenum and duct fire system.

Factory Installed Energy Management System
Factory will install the energy management system (EMS) in the hood’s integral end utility cabinet. Includes factory wiring of duct temperature sensor, and pre-set timers. EMS shall be capable of reducing exhaust and supply airflow quantities by 20% using variable frequency drives.

Integral Automatic Self-Cleaning System
Factory will install the self-cleaning system, which automatically washes down the exhaust plenum and up to 6 feet of grease duct upon fan deactivation. Cleaning cycle frequency and duration are fully adjustable.

End Panels
Factory supplied end panels will reduce dynamic effects from cross drafts and enhance the capture and containment of the hood. Exhaust CFM can be reduced by up to 30 percent of the normal exhaust rate.

AC-PSP
Factory will install the AC-PSP accessory which will delivers up to 80% make-up air while providing a termination point for AC air in a separate insulated plenum. Make-up air plenum shall be located closest to hood. Both the make-up air plenum and AC plenum shall contain two layers of perforated stainless steel diffuser plates to provide even air distribution.

CAPTIVEAIRE
COMMERCIAL KITCHEN VENTILATION
www.captiveaire.com

ND-2 Performance Values

Max Cooking Surface Temp (°F)	Minimum Exhaust CFM/Ft
450 Ovens, Steamers, Kettles, Ranges, Griddles, and Fryers	150
600 Gas Char-broilers, Electric Char-broilers, and Woks	200
700 Mesquite Grills, Charcoal Char-broilers, Wood Burning Appliances	250

Section View of Model ND-2

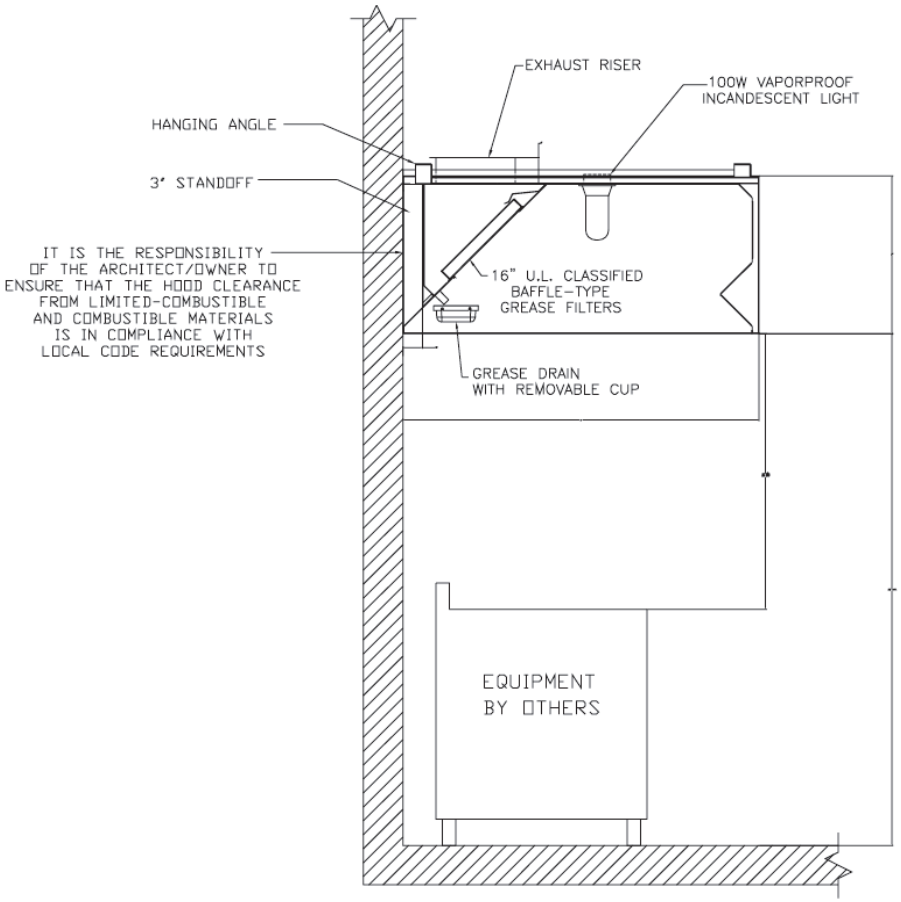

CAPTIVEAIRE
COMMERCIAL KITCHEN VENTILATION www.captiveaire.com

OPTIONAL
Perforated Supply Plenum Specification

The Perforated Supply Plenum (PSP) shall provide make-up air through perforated stainless steel panels. All seams shall be welded and have stainless steel on exposed surfaces. Unexposed surfaces shall be constructed of aluminized steel. Perforated diffuser plates shall be included in the design and to provide even air distribution and the plenum shall be insulated to prevent condensation (optional).

Features and Benefits:

- Provides up to 80% make-up air
- Stainless steel construction to match the ventilation hood
- Delivers make-up air where it is needed most while minimizing the amount of air that diffuses to space
- Decreases HVAC load, thus lowering operating costs
- Directs make-up air into the hood's capture area
- Evenly distributes make-up air along the length of the hood
- Low make-up air discharge velocities, typical velocity is 140 to 160 ft. / min.
- Assists in exceptional capture and containment of cooking vapors
- Easy installation

Section View Drawing for 12" PSP

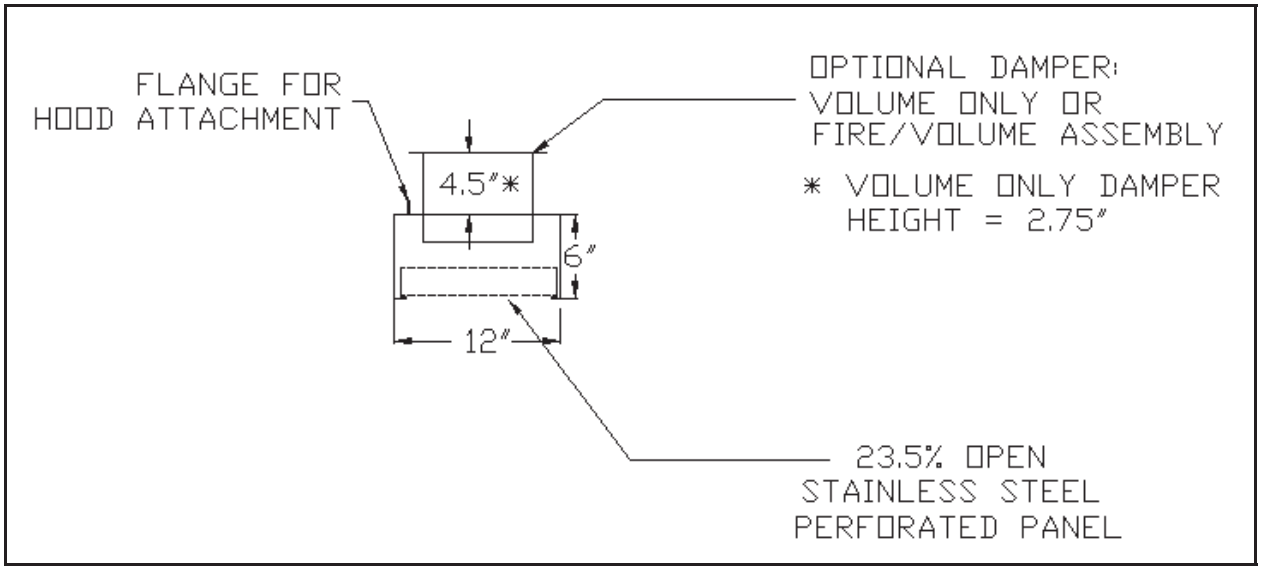

COMMERCIAL KITCHEN VENTILATION www.captiveaire.com

OPTIONAL
AC Perforated Supply Plenum Specification

The AC Perforated Supply Plenum (ACPSP) shall provide make-up air through a dual stream perforated stainless steel plenum. All seams shall be welded and have stainless steel on exposed surfaces. Unexposed surfaces shall be constructed of aluminized steel. Perforated diffuser plates shall be included in the design and to provide even air distribution. The air-conditioned portion of the plenum shall be insulated to prevent condensation. The make-up air plenum shall be located nearest the hood and the air-conditioned plenum away from the hood. The make-up air stream and the air-conditioned stream shall not be permitted to mix until leaving the dual plenum.

Features and Benefits:

- Provides up to 80% make-up air
- Delivers AC where it is needed most
- AC air does not interfere with hood's capture and containment
- Convenient termination for AC ductwork in kitchen
- Stainless steel construction to match the ventilation hood
- Insulated to prevent condensation

Section View Drawing for 22" ACPSP

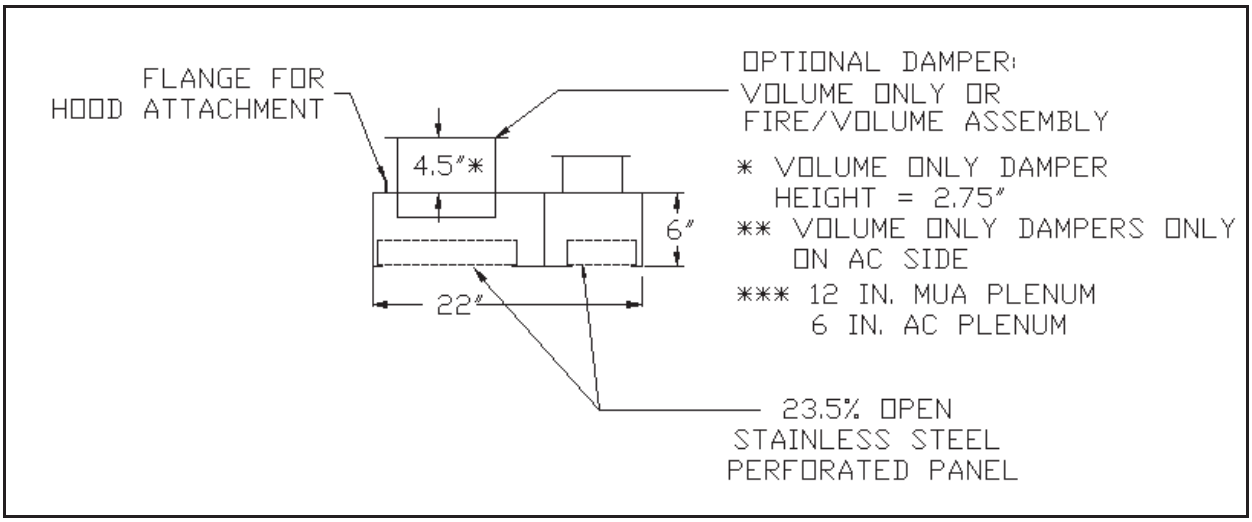

RJS + ASSOCIATES
INTEGRATED FOOD SERVICE DESIGN

ITEM# 21A - FIRE SUPPRESSION SYSTEM (1 EA REQ'D)

Captive-Aire R-102

System Description

The restaurant fire suppression system is a pre-engineered, wet chemical, cartridge-operated, regulated pressure type with a fixed nozzle agent distribution network. It is listed with Underwriters Laboratories, Inc. (UL/ULC). The system is capable of automatic detection and actuation and/or remote manual actuation. Additional equipment is available for building fire alarm panels connections, electrical shutdown and/or interface, and mechanical or electrical gas line shut-off applications.

The detection portion of the fire suppression system allows for automatic detection by means of specific temperature-rated alloy type fusible links, which separate when the temperature exceeds the rating of the link, allowing the regulated release to
actuate.

A system owner's guide is available containing basic information pertaining to system operation and maintenance. A detailed technical manual including system description, design, installation, recharge, and maintenance procedures is available. The system is installed and serviced by authorized distributors that are trained by the manufacturer.

The basic system consists of an ANSUL AUTOMAN regulated release assembly which includes a regulated release mechanism and a wet chemical storage tank housed within a single enclosure. Nozzles with blow-off caps, detectors, cartridges, agent, fusible links, and pulley elbows are supplied in separate packages in the quantities needed for fire suppression system arrangements.

Additional equipment includes remote manual pull station, mechanical and electrical gas valves, pressure switches, and electrical switches for automatic equipment and gas line shut-off. Accessories can be added such as alarms, warning lights, etc., to installations where required.

Additional tanks and corresponding equipment can be used in multiple arrangements to allow for larger hazard coverage.

Each tank is limited to a listed maximum amount of flow numbers.

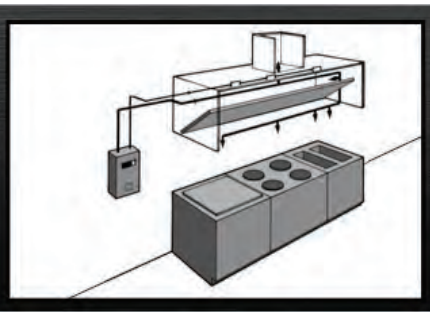

R-102 Series

Restaurant Fire Suppresion

Wet Chemical System

The ANSUL® R-102™ Restaurant Fire Suppression System is an automatic, pre-engineered fire suppression system designed to protect areas associated with ventilating equipment including hoods, ducts, plenums and filters. The system also protects auxiliary grease extraction equipment and cooking equipment.

Application

Use of the R-102 system is limited to interior applications only. The regulated release and tank assemblies must be mounted in an area where the air temperature will not fall below 32°F (0° C) or exceed 130°F (54° C). The system must be designed and installed within the guidelines of the UL/ULC Listed Design, Installation, Recharge, and Maintenance Manual.

System Description

The restaurant fire suppression system is a pre-engineered, wet chemical, cartridge-operated, regulated pressure type with a fixed nozzle agent distribution network. It is listed with Underwriters Laboratories, Inc. (UL/ULC). The system is capable of automatic detection and actuation and/or remote manual actuation. Additional equipment is available for building fire alarm panels connections, electrical shutdown and/or interface, and mechanical or electrical gas line shut-off applications.

The detection portion of the fire suppression system allows for automatic detection by means of specific temperature-rated alloy type fusible links, which separate when the temperature exceeds the rating of the link, allowing the regulated release to actuate.

A system owner's guide is available containing basic information pertaining to system operation and maintenance. A detailed technical manual including system description, design, installation, recharge, and maintenance procedures is available. The system is installed and serviced by authorized distributors that are trained by the manufacturer.

The basic system consists of an ANSUL AUTOMAN regulated release assembly which includes a regulated release mechanism and a wet chemical storage tank housed within a single enclosure. Nozzles with blow-off caps, detectors, cartridges, agent, fusible links, and pulley elbows are supplied in separate packages in the quantities needed for fire suppression system arrangements.

Additional equipment includes remote manual pull station, mechanical and electrical gas valves, pressure switches, and electrical switches for automatic equipment and gas line shut-off. Accessories can be added such as alarms, warning lights, etc., to installations where required.

Additional tanks and corresponding equipment can be used in multiple arrangements to allow for larger hazard coverage. Each tank is limited to a listed maximum amount of flow numbers.

Components

- Wet Chemical Agent
- Agent Tank
- Regulated Release Mechanism
- Regulated Actuator Assembly
- Discharge Nozzles
- Agent Distribution Hose
- Flexible Conduit
- Pull Station Assembly

Approvals

Applicable Standards: ULI listed under EX- 3470; ULC listed under CEX-747; meets requirements of NFPA 96 (Standard for the Installation of Equipment for the Removal of Smoke and Grease-Laden Vapors from Commercial Cooking Equipment); NFPA 17A (Standard on Wet Chemical Extinguishing Systems).

Ordering Information

Order all system components through your local authorized Ansul Distributor

ANSUL FIRE PROTECTION
MARINETTE, WI 54143-2542
715-735-7411

RJS + ASSOCIATES
INTEGRATED FOOD SERVICE DESIGN

ITEM# 21B - SUPPLY FAN (1 EA REQ'D)
Captive-Aire CAPTIVE-AIRE
Supply Fan
<Included Price In Item # 21>

RJS + ASSOCIATES
INTEGRATED FOOD SERVICE DESIGN

ITEM# 21C - EXHAUST FAN (1 EA REQ'D)
Captive-Aire CAPTIVE-AIRE
Exhaust Fan
<Included Price In Item # 21>

RJS + ASSOCIATES
INTEGRATED FOOD SERVICE DESIGN

ITEM# 21C - GAS MANIFOLD (1 EA REQ'D)
Captive-Aire GM
GAS MANIFOLD
<Included Price In Item # 21>

RJS + ASSOCIATES
INTEGRATED FOOD SERVICE DESIGN

ITEM# 21D - WALL FLASHING (1 LT REQ'D)

fabctr STAINLESS STEEL

Similar to standard detail FD-2.1 Thru FD-2-4. This standard detail is to be utilized as a basic minimum guideline only. Refer to these written specifications and any fabrication details included in the contract drawings for precise and complete fabrication instructions.

ACCESSORIES

Mfr	Qty	Model	Spec
fabctr	1		Cover entire wall behind (and adjacent to) all equipment, from top of coved base to the bottom of ceiling.

RJS + ASSOCIATES
INTEGRATED FOOD SERVICE DESIGN

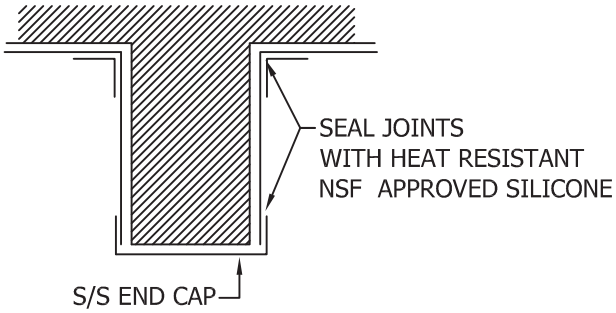

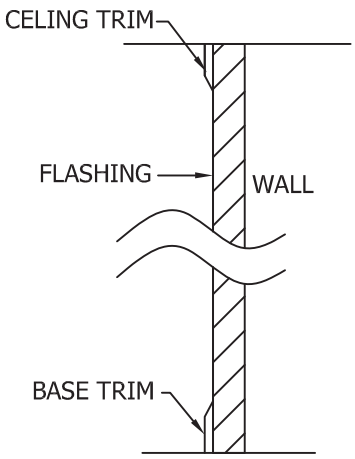

SECTION VIEW

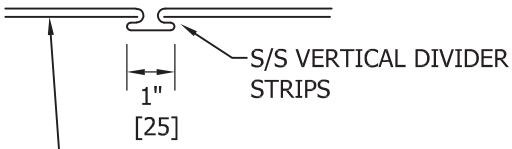

ADHERE FLASHING TO WALL WITH FULL BED OF WATER RESISTANT MASTIC. VOIDS OR FLEXING WILL NOT BE ACCEPTABLE

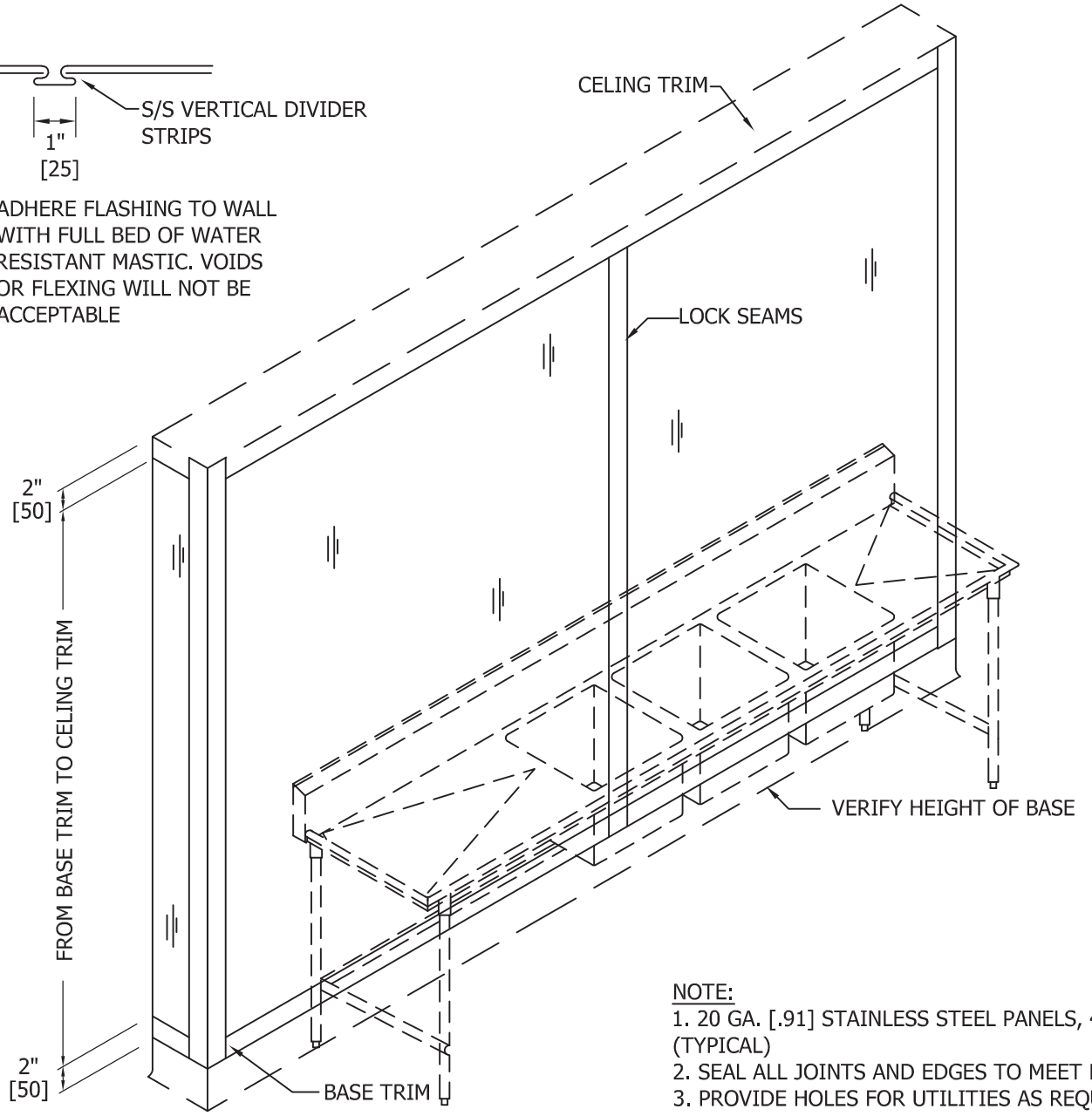

NOTE:
1. 20 GA. [.91] STAINLESS STEEL PANELS, 48" WIDE (TYPICAL)
2. SEAL ALL JOINTS AND EDGES TO MEET LOCAL CODE.
3. PROVIDE HOLES FOR UTILITIES AS REQUIRED.
4. ADHERE TO WALL WITH FULL BED OF MOISTURE RESISTANT MASTIC.

DETAIL #	DESCRIPTION:	
FD-2.4	WALL FLASHING, WAREWASH	
	SCALE: 3" = 1'-0"	MATERIAL: 304 STAINLESS STEEL CONSTRUCTION

RJS + ASSOCIATES
INTEGRATED FOOD SERVICE DESIGN

ITEM# 22 - WORK TABLE W/ HAND SINK (1 EA REQ'D)

fabctr STAINLESS STEEL

See plans for location and placement of item with reference to adjoining equipment.

ACCESSORIES

Mfr	Qty	Model	Spec
fabctr	1		Similar to standard details FD-1.1A, FD-1.2A, FD-1.4, FD-1.5a, FD-1.8, FD-4.4 and FD-4.5. These standard details are to be utilized as basic minimum guidelines only. Refer to these written specifications and any fabrication details included in the contract drawings for precise and complete fabrication instructions.
fabctr	1		Provide (1) 14" wide x 14" wide x 10" deep sink bowls as located on plan.

RJS + ASSOCIATES
INTEGRATED FOOD SERVICE DESIGN

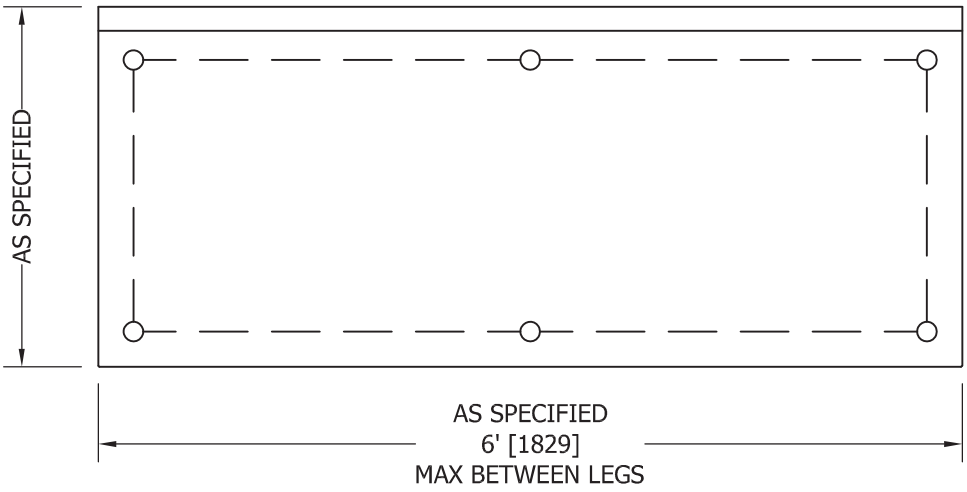

PLAN VIEW

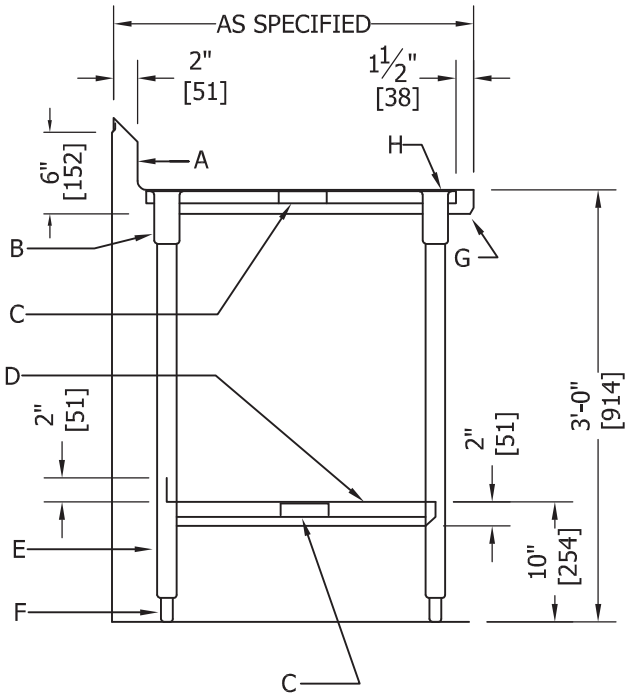

SECTION VIEW

LEGEND:
A. BACKSPLASH DETAIL AS SPECIFIED
B. STAINLESS STEEL GUSSET
C. CHANNEL REINFORCING
D. UNDERSHELF (SEE DETAIL FD-1.8)
E. 1-5/8" ø x 16 GA. [1.5mm] LEGS & CROSSRAILS
F. ADJUSTABLE FEET (DETAIL FD-1.4)
G. EDGE DETAIL AS SPECIFIED
H. 14 GA. [1.8mm] STAINLESS STEEL TOP

NOTES:
1. MATERIAL TO BE 14 GA. [1.8mm] STAINLESS STEEL
2. ENTIRE UNIT TO BE ALL WELDED COVE CORNERED CONSTRUCTION WITH VERTICAL AND HORIZONTAL AND INTERIOR CORNERS HAVING A 3/4" [20mm] RADIUS.

DETAIL #	DESCRIPTION:	
FD-4.4	WORK TABLE W/ UNDERSHELF	
	SCALE: 3/4" = 1'-0"	MATERIAL: 304 STAINLESS STEEL CONSTRUCTION

RJS + ASSOCIATES
INTEGRATED FOOD SERVICE DESIGN

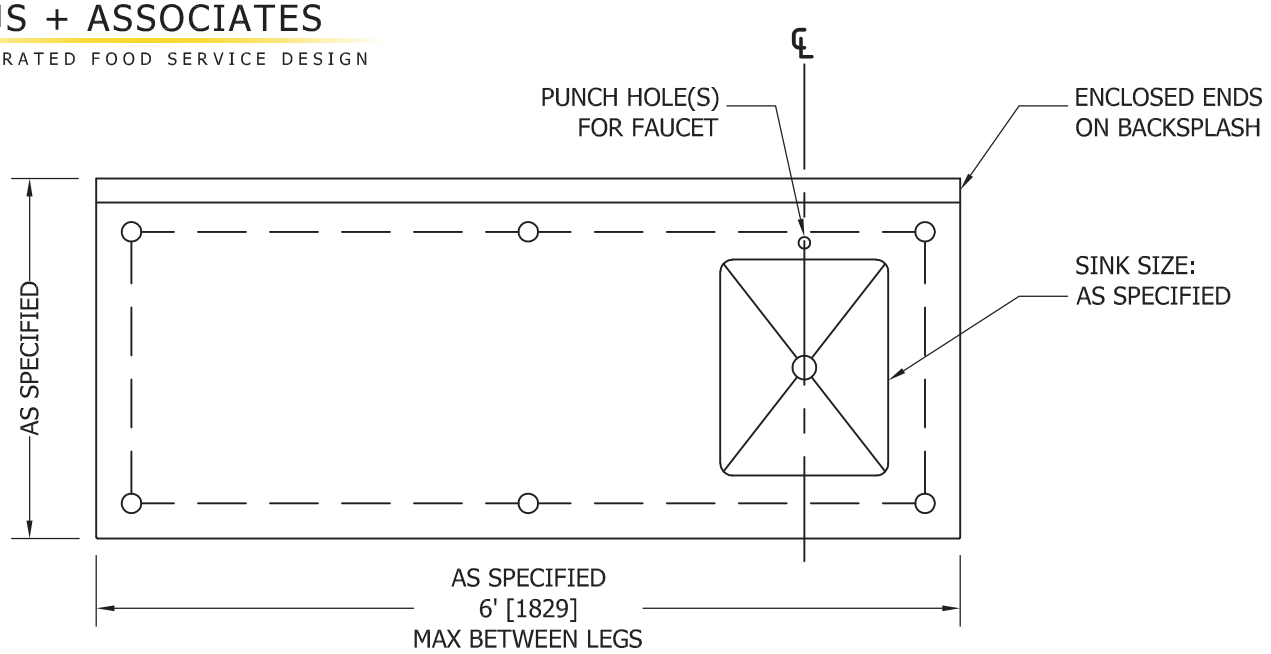

PLAN

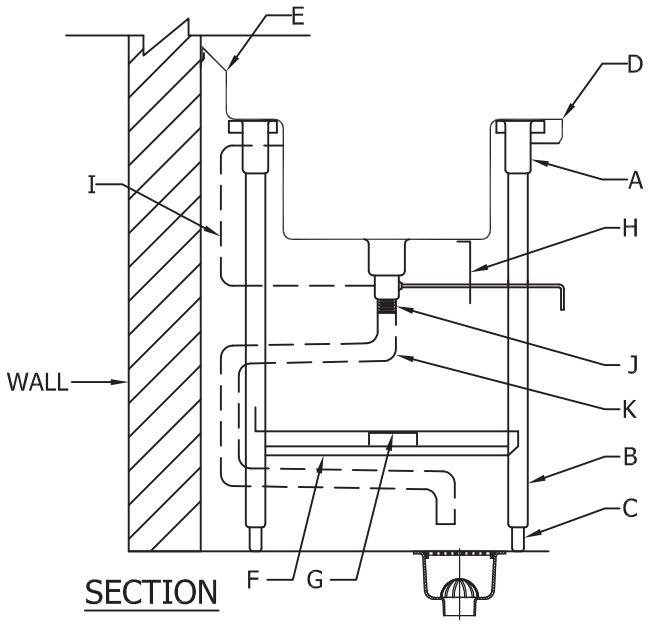

SECTION

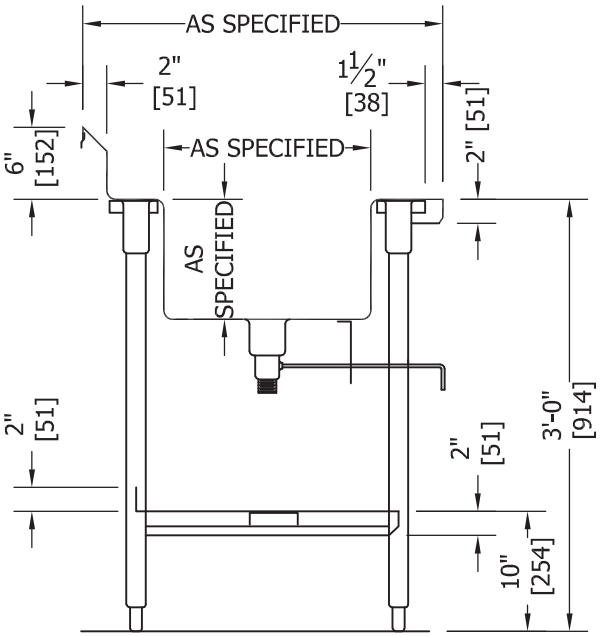

SECTION

LEGEND:
A. STAINLESS STEEL GUSSET
B. 1-5/8" ϕ X 16 GA. [1.5mm] LEGS AND CROSSRAILS
C. ADJUSTABLE FEET (SEE DETAIL FD-1.4)
D. EDGE DETAIL AS SPECIFIED
E. BACKSPLASH DETAIL AS SPECIFIED
F. 16 GA. [1.5mm] S/S UNDERSHELF (SEE DETAIL FD-1.8)
G. CHANNEL REINFORCING
H. WASTE LEVER BRACKET (SEE DETAIL FD-1.15)
I. OVERFLOW AS REQUIRED
J. DRAIN SIZE AS SPECIFIED
K. RECOMMENDED DRAIN LINE INSTALLATION

NOTES:
1. MATERIAL TO BE 14 GA. [1.9mm] STAINLESS STEEL
2. ENTIRE UNIT TO BE ALL WELDED COVE CORNERED CONSTRUCTION WITH VERTICAL AND HORIZONTAL AND INTERIOR CORNERS HAVING A 3/4" [20mm] RADIUS.
3. ENTIRE SINK COMPARTMENT TO BE PITCHED AND CREASED TO WASTE TO ASSURE COMPLETE DRAINING WITHOUT POOLING.

DETAIL #	DESCRIPTION:	
FD-4.5	WORK TABLE W/ SINK & UNDERSHELF	
	SCALE: 3/4" = 1'-0"	MATERIAL: 304 STAINLESS STEEL CONSTRUCTION

RJS + ASSOCIATES
INTEGRATED FOOD SERVICE DESIGN

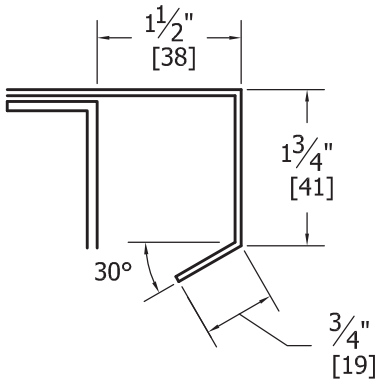

A TURN-DOWN

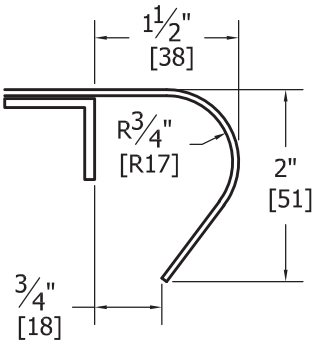

B BULLNOSE

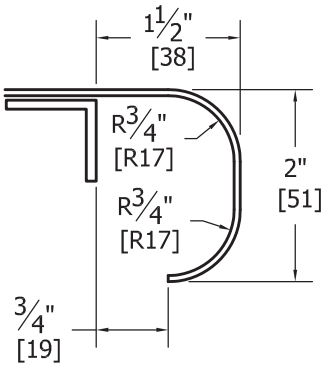

C ROLLED FLAT

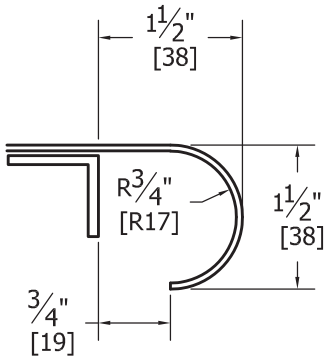

D ROLLED

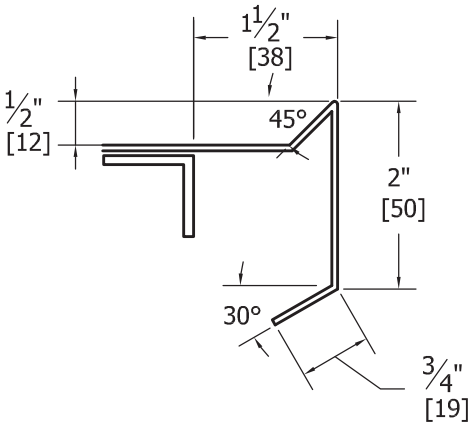

E DIE-CRIMPED

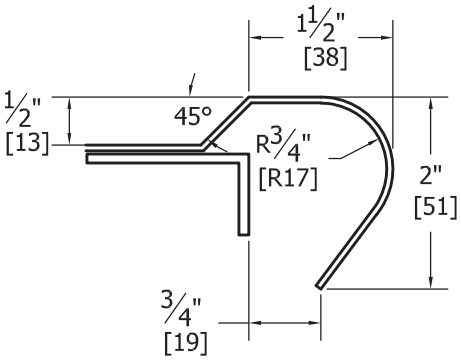

F MARINE-BULLNOSED

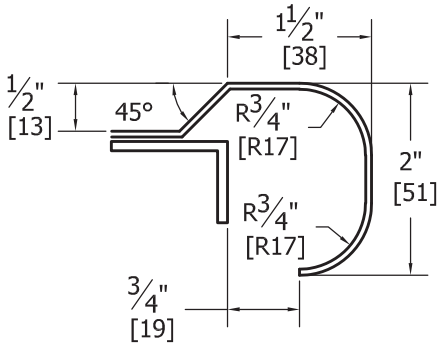

G MARINE-ROLLED FLAT

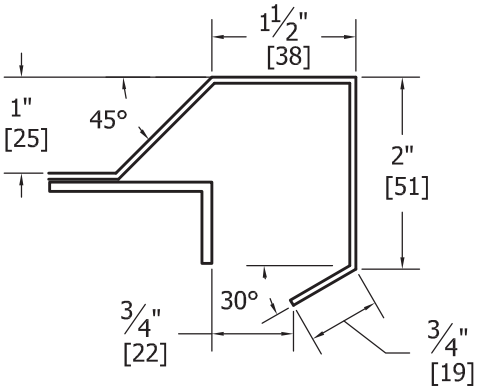

H MARINE

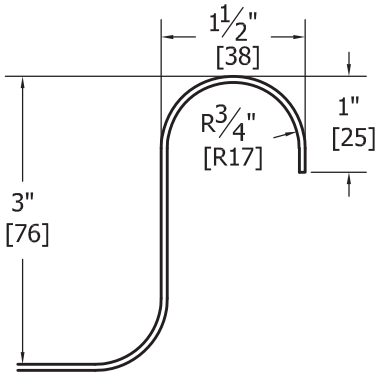

I RAISED ROLLED

DETAIL #	DESCRIPTION:	
FD-1.1	EDGES	
	SCALE: 6" = 1'-0"	MATERIAL: 304 STAINLESS STEEL CONSTRUCTION

RJS + ASSOCIATES
INTEGRATED FOOD SERVICE DESIGN

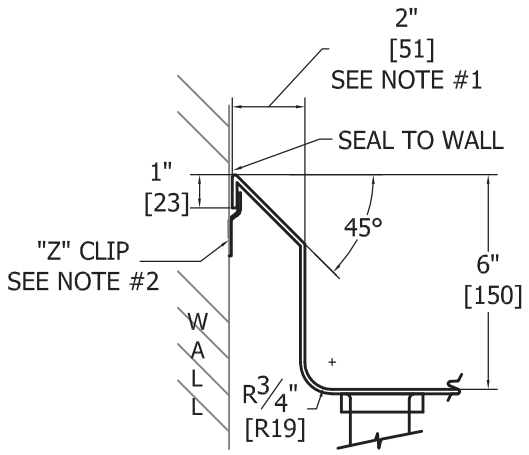

A STANDARD

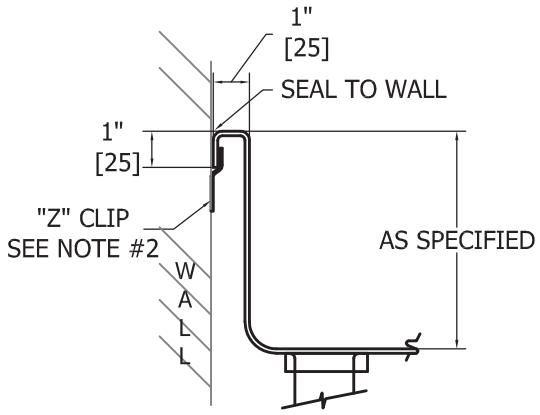

B SQUARE TURNBACK

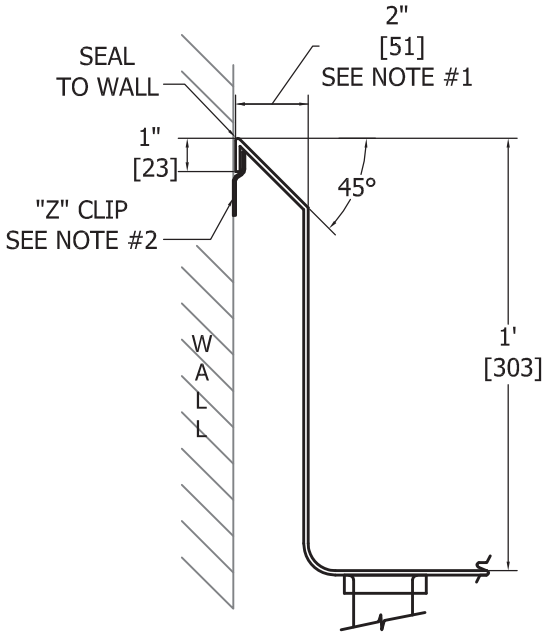

C STANDARD-INTERMEDIATE

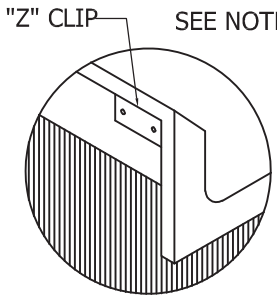

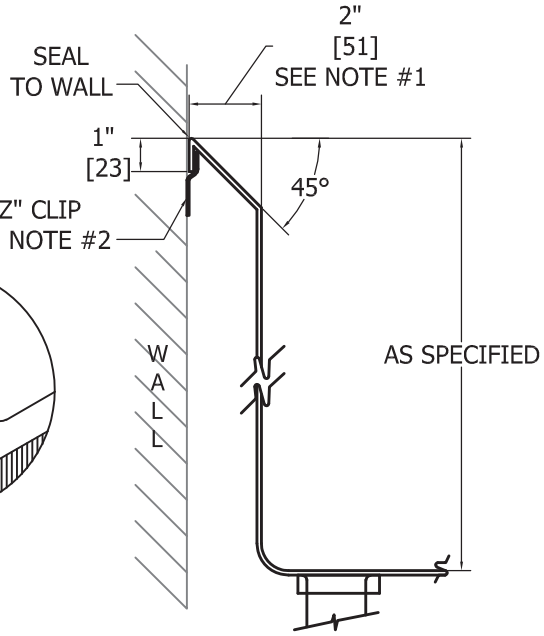

D STANDARD-EXTENDED

NOTES:

1. DEPTH INCREASED TO 2-1/2" [65mm] AT SINKS TO ALLOW FOR CONNECTED OVERFLOW.
2. 12 GA [2.7mm] S/S CLIP, 4" [100mm] LONG, FASTENED TO WALL AT EACH END OF UNIT AND 4'-0" [1200mm] O.C. SECURE TO WALL WITH A MINIMUM OF TWO. USE 1/4" [5mm] x 20 S/S BOLTS WITH TOGGLES OR EXPANSION SHIELDS.
3. EXPOSED ENDS TO BE ENCLOSED AND FULLY WELDED.
4. SEAL TO WALL ALL AROUND.

DETAIL #	DESCRIPTION:	
FD-1.2	SPLASHES	
	SCALE: N.T.S.	MATERIAL: 304 STAINLESS STEEL CONSTRUCTION

RJS + ASSOCIATES
INTEGRATED FOOD SERVICE DESIGN

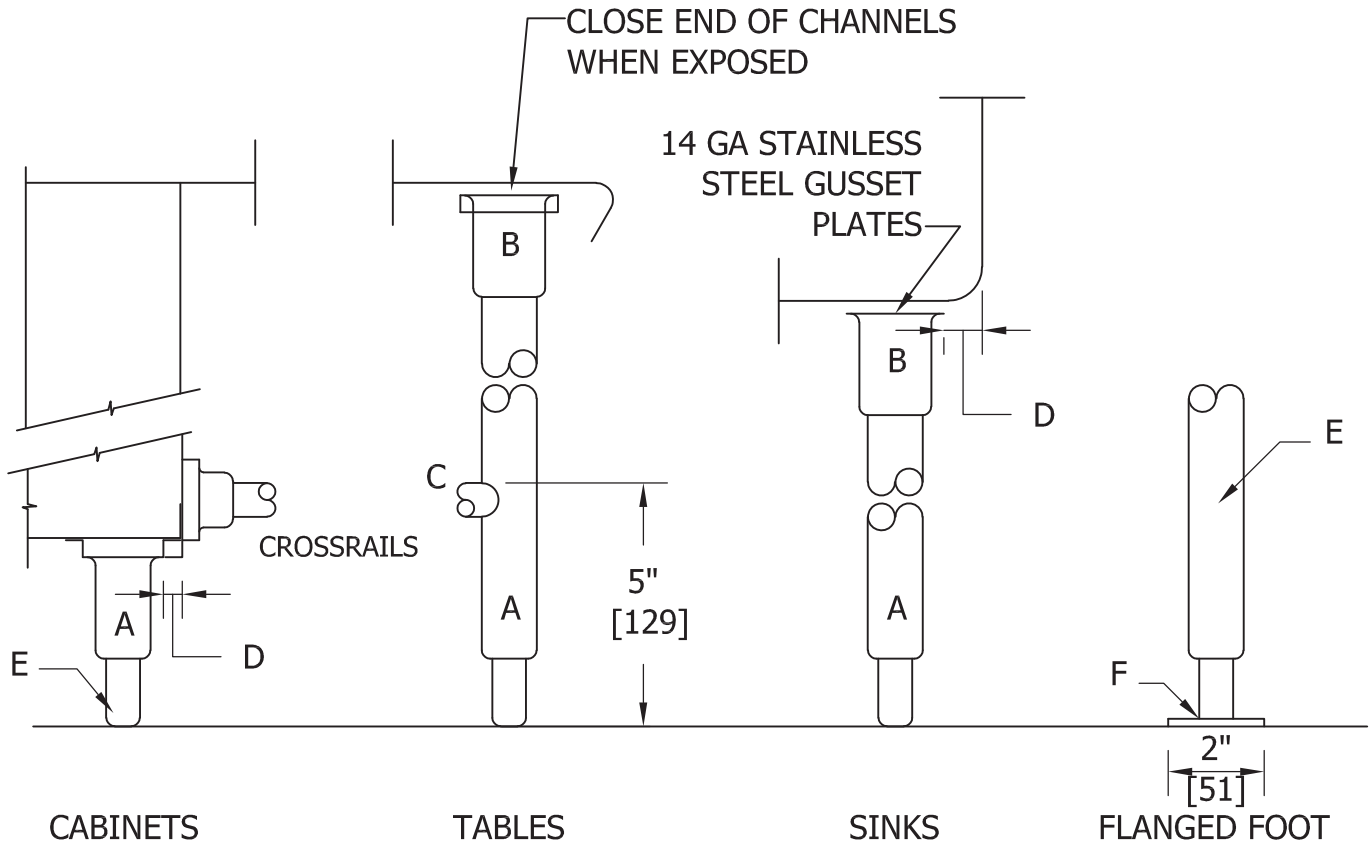

LEGEND:

A. LEGS TO BE 1⅝" O.D. 16 GA. [1.5mm] STAINLESS STEEL ASSEMBLY WITH BULLET FEET.
B. GUSSETS TO BE STAINLESS STEEL WITH SET SCREWS FOR SECURING LEGS.
FULLY WELD GRIND , SMOOTH AND POLISH GUSSETS TO CHANNELS OR GUSSET PLATES.
C. CROSSRAILS TO BE 1⅝" O.D. 16 GA. [1.5mm] STAINLESS STEEL TUBING FULLY WELDED TO LEGS. WHERE CROSSRAILS JOIN CABINET BODY, PROVIDE FLANGE SECURED WITH STAINLESS STEEL SCREWS.
D. 3/4" [20mm] MINIMUM CLEARANCE ALL AROUND.
E. FOOT SET AT MIDPOINT TO ALLOW 1"[25mm] ADJUSTMENT UP AND 1" [25mm] DOWN. WITHOUT THREAD EXPOSURE.
F. FLANGE FOOT TO FLOOR WITH COUNTERSUNK S/S BOLTS.

NOTE:
ENTIRE FINISHED STRUCTURE AND COMPONENTS TO MEET NSF REQUIREMENTS
MAINTAIN 6" [150mm] MINIMUM CLEARANCE BETWEEN FINISHED STRUCTURE & FLOOR.

DETAIL #	DESCRIPTION:	
FD-1.4	LEGS AND CROSSBRACING	
	SCALE: 3" = 1'-0"	MATERIAL: 304 STAINLESS STEEL CONSTRUCTION

RJS + ASSOCIATES
INTEGRATED FOOD SERVICE DESIGN

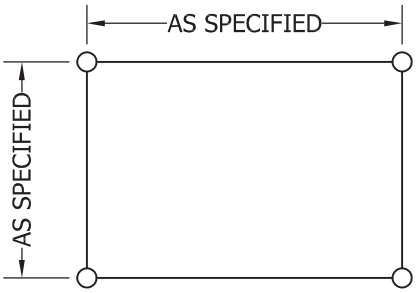

PLAN VIEW

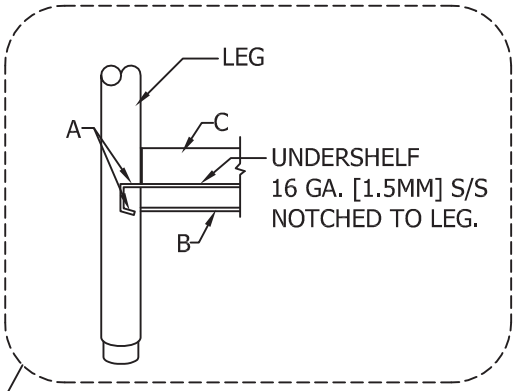

UNDERSHELF DETAIL

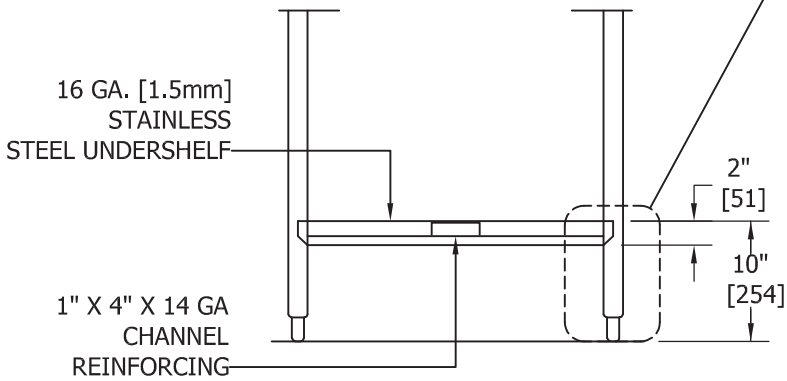

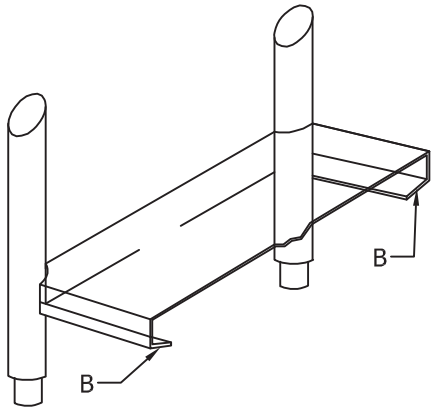

TYPICAL ISLAND APPLICATION

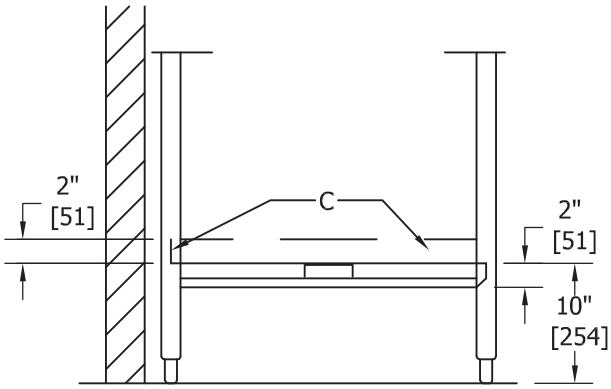

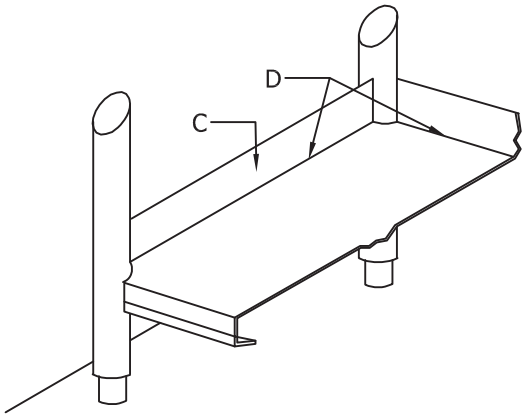

TYPICAL WALL APPLICATION

LEGEND:
A. FULLY WELD, GRIND, SMOOTH AND POLISH, WHEREVER SHELF INTERSECTS LEGS.
B. ISLAND TABLES, TURN DOWN ALL SIDES UNLESS OTHERWISE SPECIFIED.
C. TABLES AGAINST WALLS OR EQUIPMENT, TURN REAR AND ENDS AND SIDES UP 2" [50mm] UNLESS OTHERWISE SPECIFIED.
D. COVED BEND ACCEPTABLE, BUT NOT REQUIRED.

DETAIL #	DESCRIPTION:	
FD-1.8	UNDERSHELF	
	SCALE: 3/4" = 1'-0"	MATERIAL: 304 STAINLESS STEEL CONSTRUCTION

RJS + ASSOCIATES
INTEGRATED FOOD SERVICE DESIGN

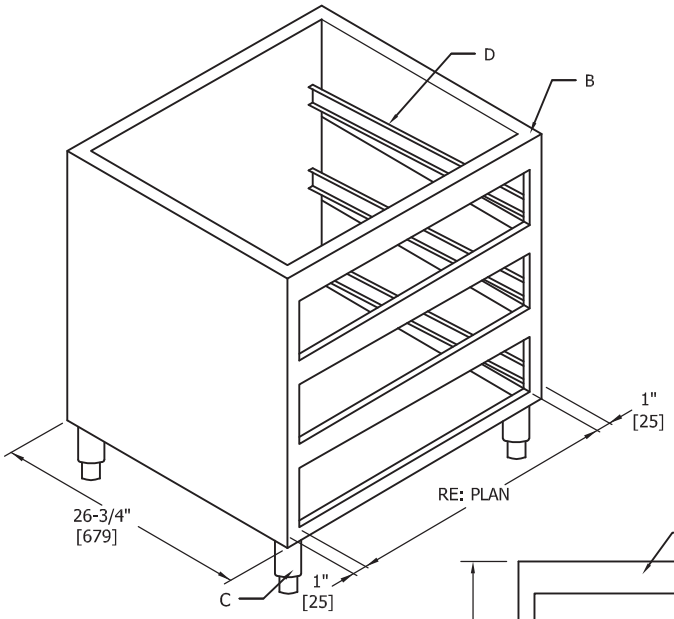

ISOMETRIC

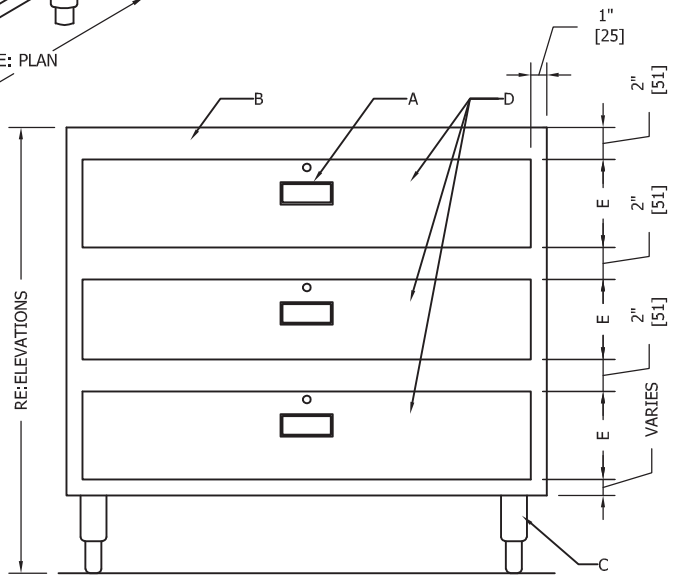

ELEVATION
THREE TIER

LEGEND:
A. RECESSED LOCK AND PULL OR AS SPECIFIED
B. 18 GA. [1.2mm] S/S HOUSING
C. ADJUSTABLE FEET
D. 18 GA. [1.2mm] DRAWERS W/ HEAVY DUTY GLIDES OR AS SPECIFIED
E. DRAWER SIZE VARIES DEPENDING ON QUANTITY

DETAIL #	DESCRIPTION:	
FD-1.5a	DRAWER ASSEMBLY	
	SCALE: 1" = 1'-0"	MATERIAL: 304 STAINLESS STEEL CONSTRUCTION

RJS + ASSOCIATES
INTEGRATED FOOD SERVICE DESIGN

ITEM# 22A - HANDS FREE ELECTRONIC FAUCET (1 EA REQ'D)

T&S Brass EC-3100-120X

ChekPoint™ Electronic Faucet, deck mount, 120X rigid gooseneck, vandal resistant aerator, AC/DC control module, mixing valve, 100-240 VAC adapter

T&S BRASS AND BRONZE WORKS, INC.

2 Saddleback Cove / P.O. Box 1088
Travelers Rest, SC 29690

Travelers Rest, SC: 800-476-4103 • Simi Valley, CA: 800-423-0150 • Fax: 864-834-3518 • www.tsbrass.com

Model No.

EC-3100-120X

Item No.

This Space for Architect/Engineer Approval

Job Name_____Date_____

Model Specified_____ Quantity_____

Customer/Wholesaler_____

Contractor_____

Architect/Engineer_____

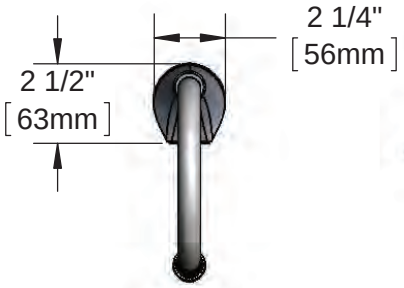

ADA Compliant

T&S ChekPoint™

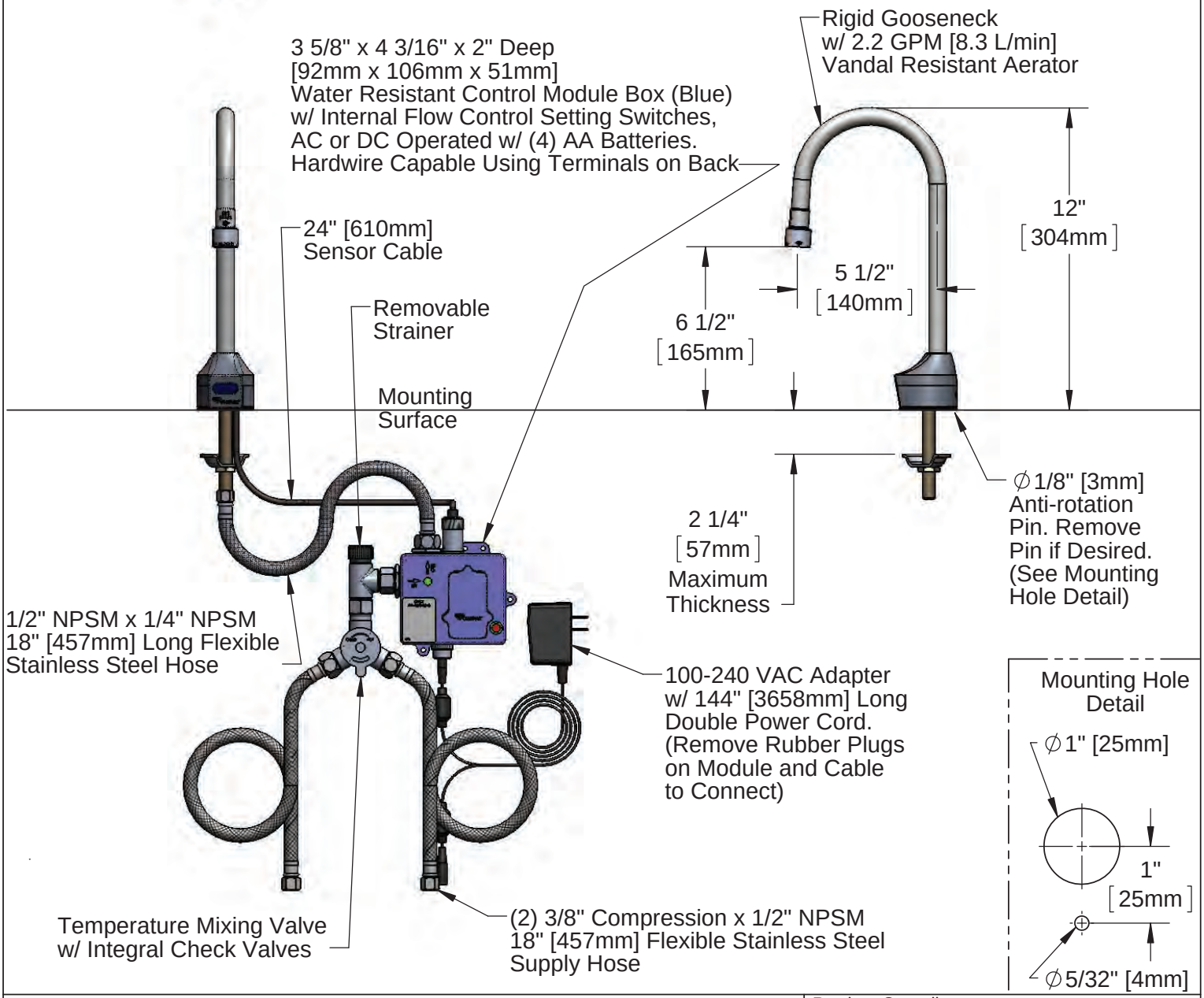

Product Specifications:

Chrome Plated Brass Electronic Faucet: Deck Mount Rigid Gooseneck w/ VR Aerator, AC/DC Control Module w/ Internal Flow Control Setting Switches, Temperature Control Mixing Valve, 18" Long Hot & Cold Supply Stop Flexible Connector Hoses

Product Compliance:

ASME A112.18.1 / CSA B125.1
NSF 61 - Section 9
NSF 372 (Low Lead Content)
ANSI A117.1 (ADA)
UL 1951

Drawn: GEF	Checked: DMH	Approved: JHB	Date: 05/07/14	Scale: 1:6	Sheet: 1 of 2

T&S BRASS AND BRONZE WORKS, INC.

2 Saddleback Cove / P.O. Box 1088
Travelers Rest, SC 29690

Travelers Rest, SC: 800-476-4103 • Simi Valley, CA: 800-423-0150 • Fax: 864-834-3518 • www.tsbrass.com

Model No.
EC-3100-120X

Item No.

ITEM NO.	SALES NUMBER	DESCRIPTION
1	B-0199-06	VR Aerator w/ Key
2	044A	3/8" to Aerator Adapter
3	006575-45	O-Ring
4	017195-45	Angled Sensor w/ Cable
5	016297-45	Inlet Hose, Faucet, 1/2" NPSM-F x 1/4" NPSM-F
6	5EF-0006	Mechanical Mixing Valve
7	5EF-0005	Supply Hose, 9/16-24 Female x 1/2" NPSM
8	015425-45	Vandal Resistant Key
9	016647-45	ChekPoint Module (Blue)
10	5EF-0002	A/C Transformer
11	EC-FILTER	Replacement Filter

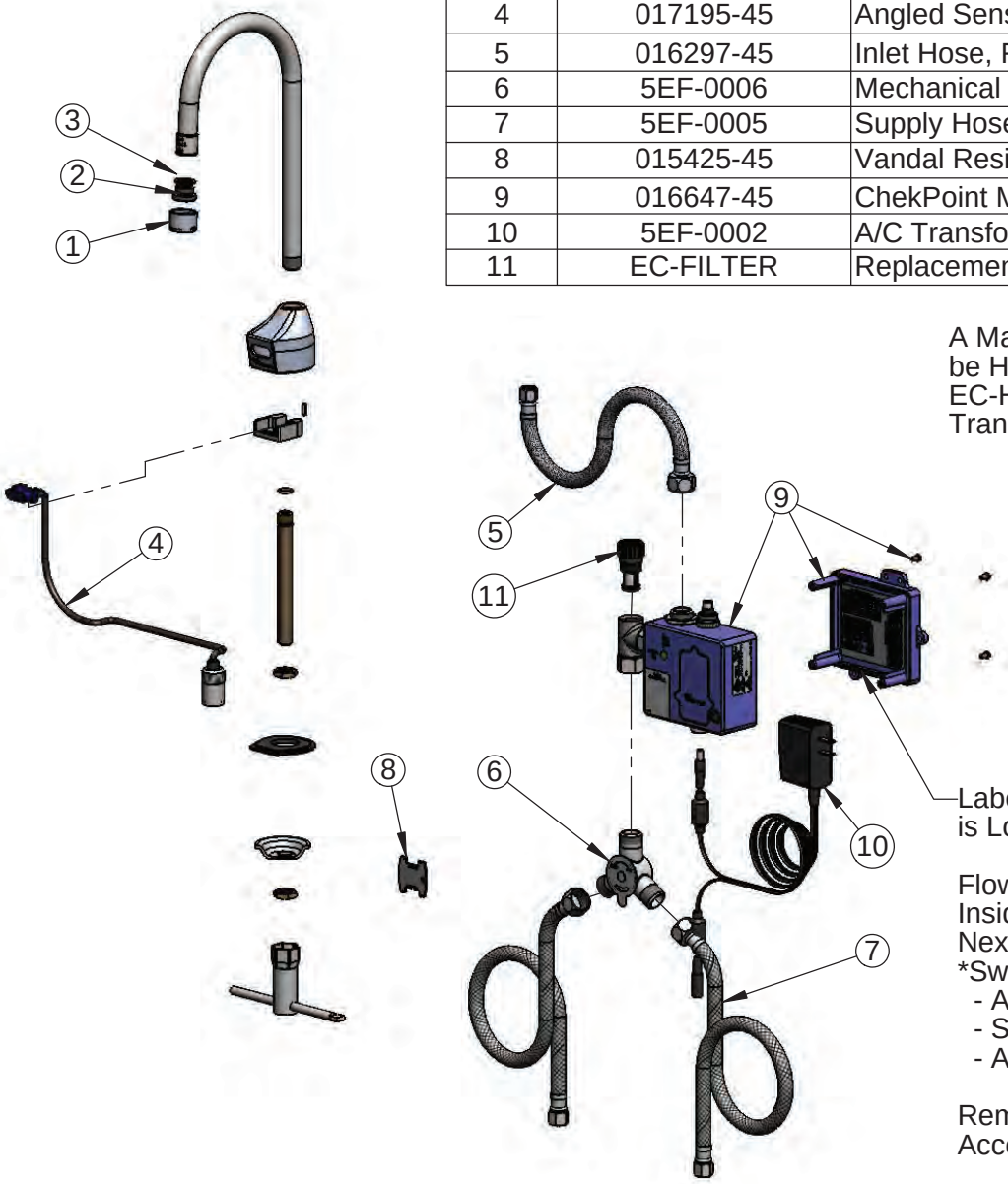

A Maximum of (8) ChekPoint Faucets can be Hardwire Connected and Powered by EC-HARDWIRE ChekPoint Hardwire AC Transformer. (Sold Separately)

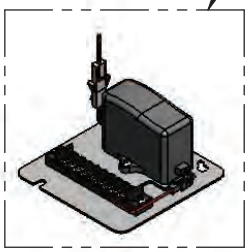

Label for Flow Control Switch Settings is Located on Inside of Back Cover.

Flow Control Switches are Located Inside Module Housing in Black Box Next to Battery Compartment.
*Switches are Set to DEFAULT Position:
- Auto Time Out = 15 Seconds
- Shut Off Delay = 1 Second
- Auto Flush = OFF

Remove (4) Screws and Back Cover to Access Switches.

*Available Water Flow Control Selections:
- Auto Time Out: 15 sec, 30 sec, 45 sec, 60 sec, 3 min, 20 min
- Shut Off Delay: 1 sec, 10 sec, 15 sec, 30 sec
- Auto Flush (30 Seconds After Every 12 Inactive Hours): ON or OFF

Product Specifications:

Chrome Plated Brass Electronic Faucet: Deck Mount Rigid Gooseneck w/ VR Aerator, AC/DC Control Module w/ Internal Flow Control Setting Switches, Temperature Control Mixing Valve, 18" Long Hot & Cold Supply Stop Flexible Connector Hoses

Product Compliance:

ASME A112.18.1 / CSA B125.1
NSF 61 - Section 9
NSF 372 (Low Lead Content)
ANSI A117.1 (ADA)
UL 1951

Drawn: GEF	Checked: DMH	Approved: JHB	Date: 05/07/14	Scale: NTS	Sheet: 2 of 2

RJS + ASSOCIATES
INTEGRATED FOOD SERVICE DESIGN

ITEM# 22B - PAPER TOWEL DISPENSER (1 EA REQ'D)
ByVen BY VENDOR
PAPER TOWEL DISPENSER
<By Vendor>

RJS + ASSOCIATES
INTEGRATED FOOD SERVICE DESIGN

ITEM# 22C - SOAP DISPENSER (1 EA REQ'D)
ByVen BY VENDOR
SOAP DISPENSER
<By Vendor>

RJS + ASSOCIATES
INTEGRATED FOOD SERVICE DESIGN

ITEM# 22D - WASTE BASKET (1 EA REQ'D)

Rubbermaid FG254300BLA

Waste Basket, 28 quart, 14-1/2"W x 10-1/2"D x 15-5/16"H, fire resistant, rounded corners, textured finish, fiberglass, black, CSFM & UL approved, S.O.S. (Special Order Smallwares) product; see SOS document for details (CAN BREAK CASE - INDICATE ON PO)

<By Vendor>

RJS + ASSOCIATES
INTEGRATED FOOD SERVICE DESIGN

ITEM# 23 - PREP TABLE W/PREP SINKS (1 EA REQ'D)

fabctr STAINLESS STEEL

See plans for location and placement of item with reference to adjoining equipment.

ACCESSORIES

Mfr	Qty	Model	Spec
fabctr	1		Similar to standard details FD-1.1A, FD-1.2A, FD-1.4, FD-1.5a, FD-1.8, FD-4.4 and FD-4.5. These standard details are to be utilized as basic minimum guidelines only. Refer to these written specifications and any fabrication details included in the contract drawings for precise and complete fabrication instructions.
fabctr	1		Provide (2) 24" wide x 24" wide x 15" deep sink bowls as located on plan.
Custom	1		Sink Covers

RJS + ASSOCIATES
INTEGRATED FOOD SERVICE DESIGN

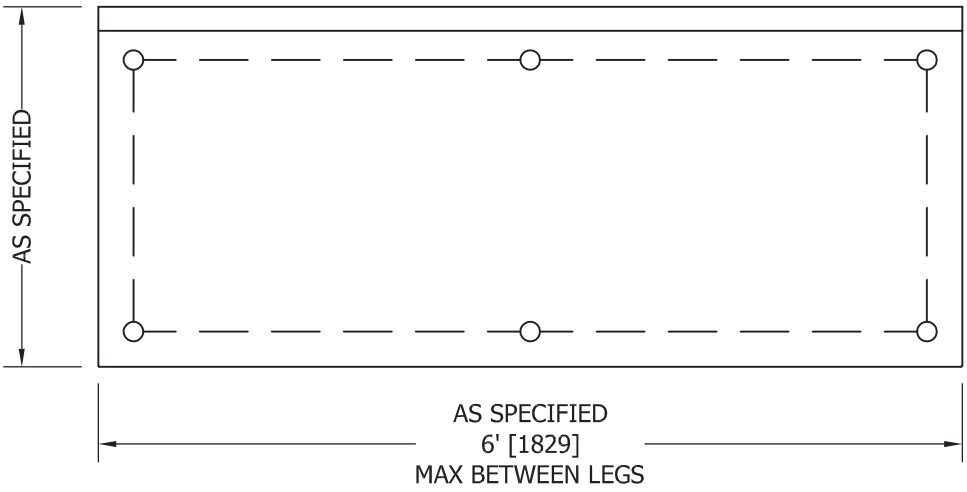

PLAN VIEW

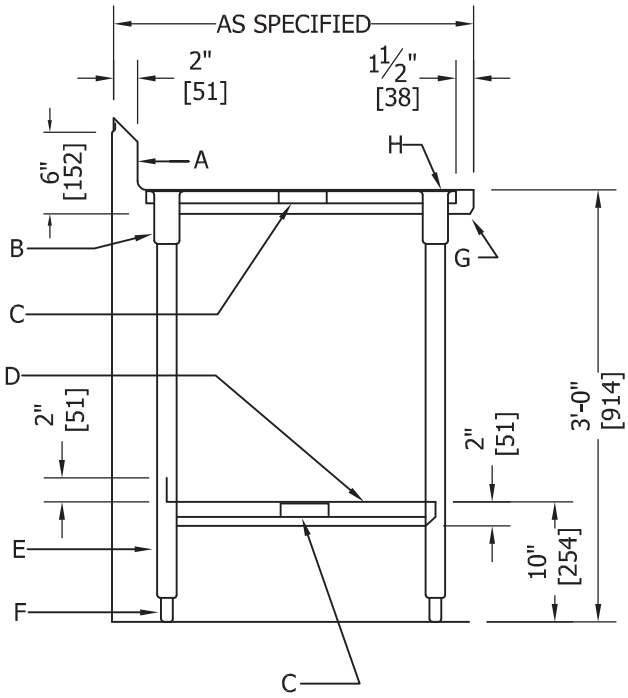

SECTION VIEW

LEGEND:
A. BACKSPLASH DETAIL AS SPECIFIED
B. STAINLESS STEEL GUSSET
C. CHANNEL REINFORCING
D. UNDERSHELF (SEE DETAIL FD-1.8)
E. 1-5/8" ϕ x 16 GA. [1.5mm] LEGS & CROSSRAILS
F. ADJUSTABLE FEET (DETAIL FD-1.4)
G. EDGE DETAIL AS SPECIFIED
H. 14 GA. [1.8mm] STAINLESS STEEL TOP

NOTES:
1. MATERIAL TO BE 14 GA. [1.8mm] STAINLESS STEEL
2. ENTIRE UNIT TO BE ALL WELDED COVE CORNERED CONSTRUCTION WITH VERTICAL AND HORIZONTAL AND INTERIOR CORNERS HAVING A 3/4" [20mm] RADIUS.

DETAIL #	DESCRIPTION:	
FD-4.4	WORK TABLE W/ UNDERSHELF	
	SCALE: 3/4" = 1'-0"	MATERIAL: 304 STAINLESS STEEL CONSTRUCTION

RJS + ASSOCIATES
INTEGRATED FOOD SERVICE DESIGN

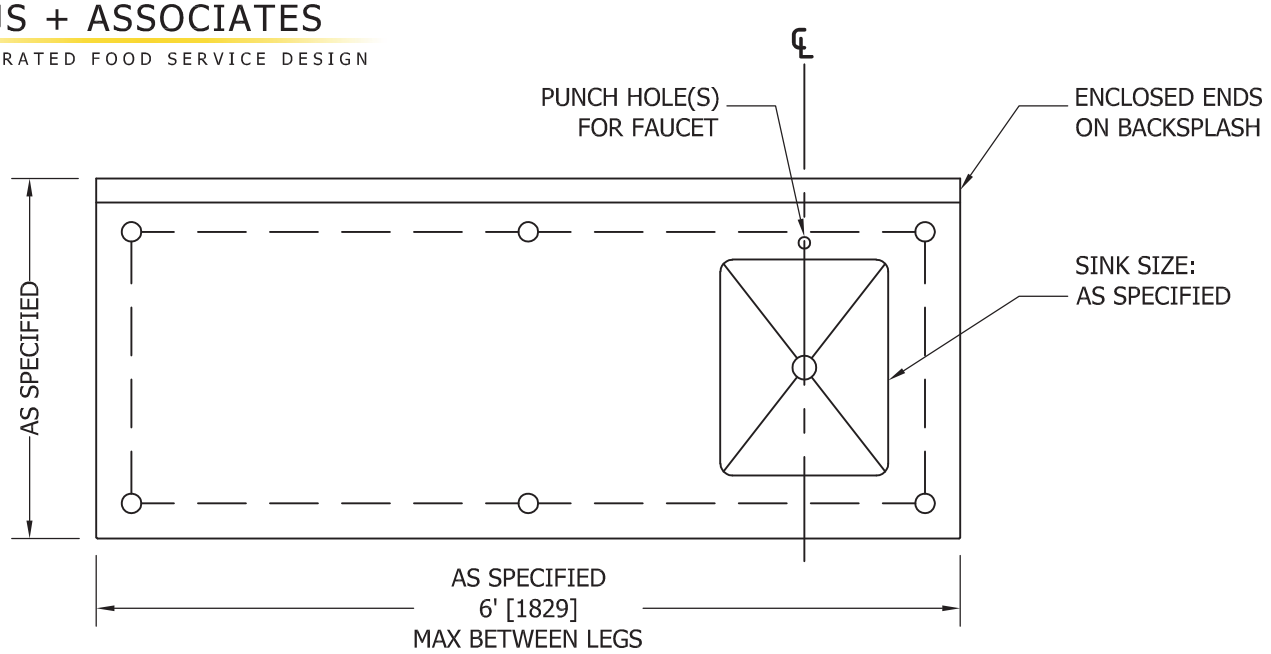

PLAN

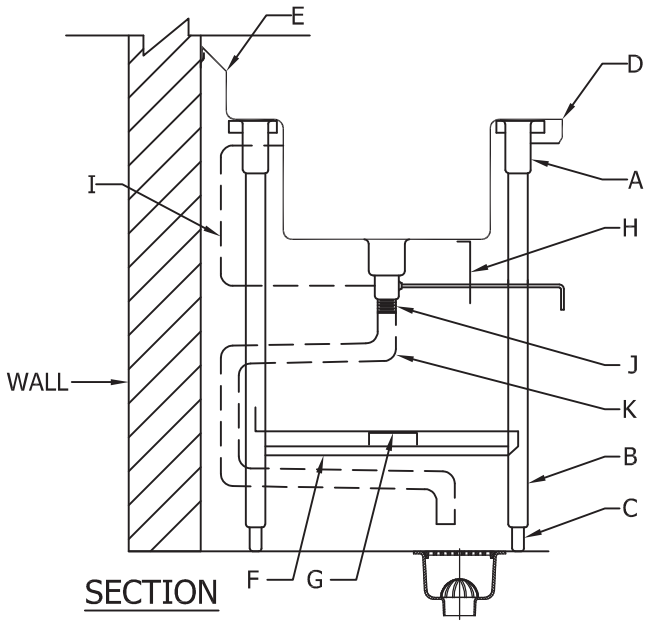

SECTION

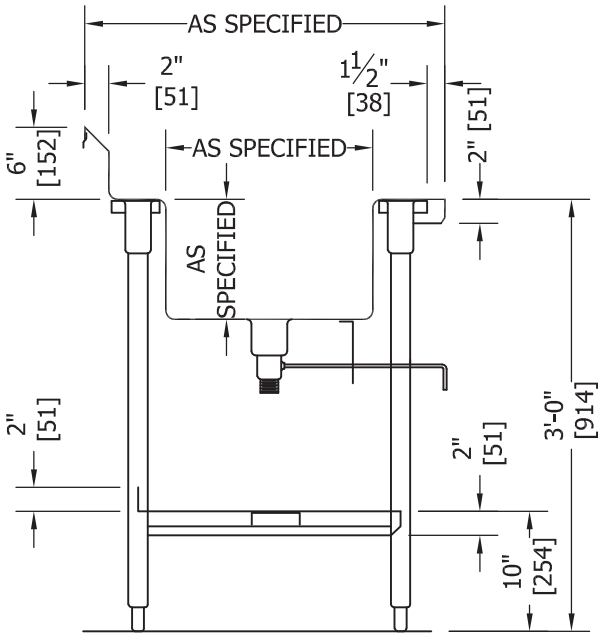

SECTION

LEGEND:
A. STAINLESS STEEL GUSSET
B. 1-5/8" ϕ X 16 GA. [1.5mm] LEGS AND CROSSRAILS
C. ADJUSTABLE FEET (SEE DETAIL FD-1.4)
D. EDGE DETAIL AS SPECIFIED
E. BACKSPLASH DETAIL AS SPECIFIED
F. 16 GA. [1.5mm] S/S UNDERSHELF (SEE DETAIL FD-1.8)
G. CHANNEL REINFORCING
H. WASTE LEVER BRACKET (SEE DETAIL FD-1.15)
I. OVERFLOW AS REQUIRED
J. DRAIN SIZE AS SPECIFIED
K. RECOMMENDED DRAIN LINE INSTALLATION

NOTES:
1. MATERIAL TO BE 14 GA. [1.9mm] STAINLESS STEEL
2. ENTIRE UNIT TO BE ALL WELDED COVE CORNERED CONSTRUCTION WITH VERTICAL AND HORIZONTAL AND INTERIOR CORNERS HAVING A 3/4" [20mm] RADIUS.
3. ENTIRE SINK COMPARTMENT TO BE PITCHED AND CREASED TO WASTE TO ASSURE COMPLETE DRAINING WITHOUT POOLING.

DETAIL #	DESCRIPTION:	
FD-4.5	WORK TABLE W/ SINK & UNDERSHELF	
	SCALE: 3/4" = 1'-0"	MATERIAL: 304 STAINLESS STEEL CONSTRUCTION

RJS + ASSOCIATES
INTEGRATED FOOD SERVICE DESIGN

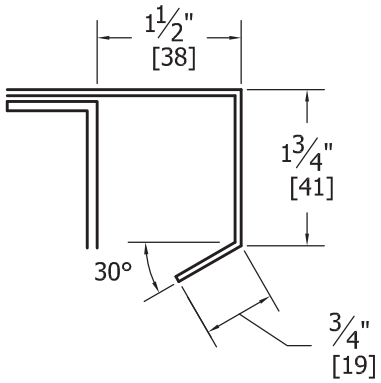

A TURN-DOWN

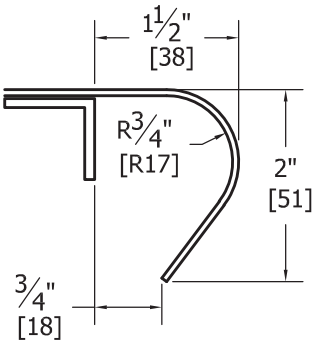

B BULLNOSE

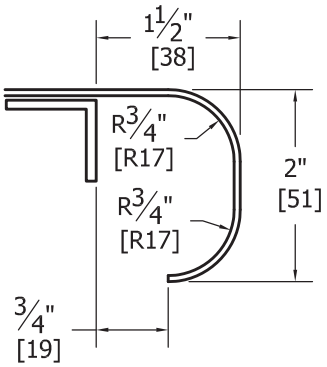

C ROLLED FLAT

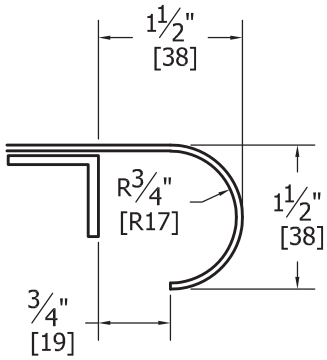

D ROLLED

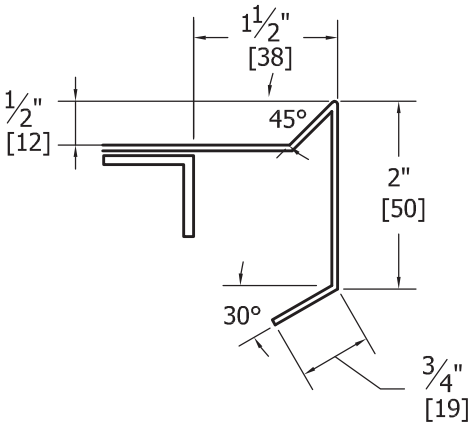

E DIE-CRIMPED

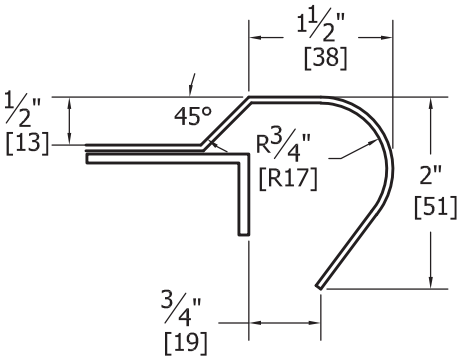

F MARINE-BULLNOSED

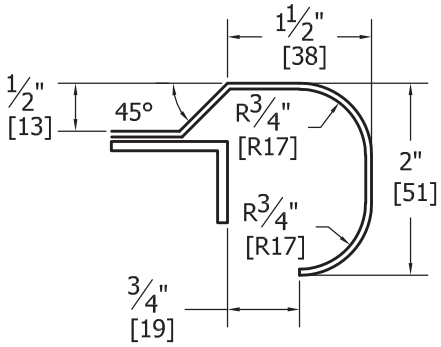

G MARINE-ROLLED FLAT

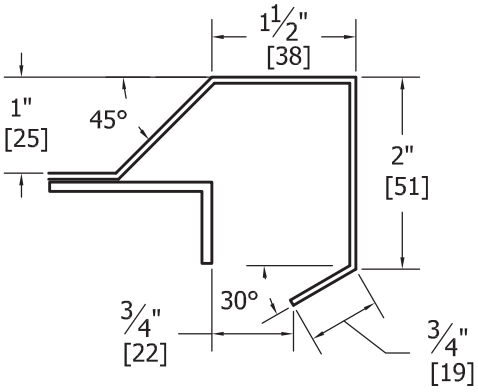

H MARINE

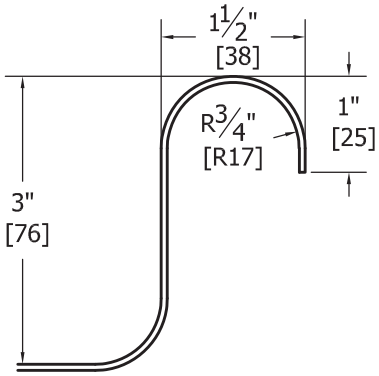

I RAISED ROLLED

DETAIL #	DESCRIPTION:	
FD-1.1	EDGES	
	SCALE: 6" = 1'-0"	MATERIAL: 304 STAINLESS STEEL CONSTRUCTION

RJS + ASSOCIATES
INTEGRATED FOOD SERVICE DESIGN

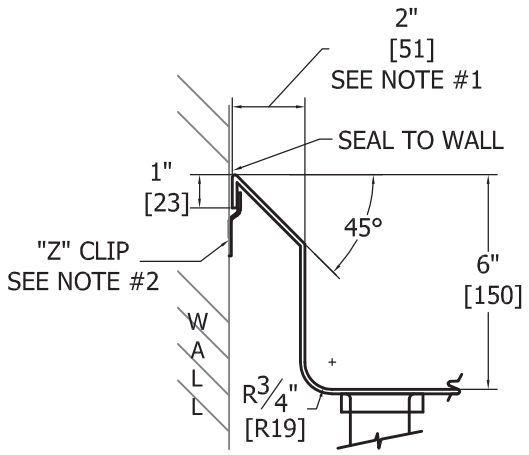

A STANDARD

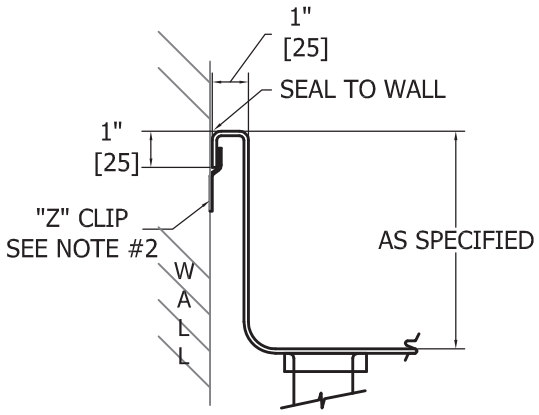

B SQUARE TURNBACK

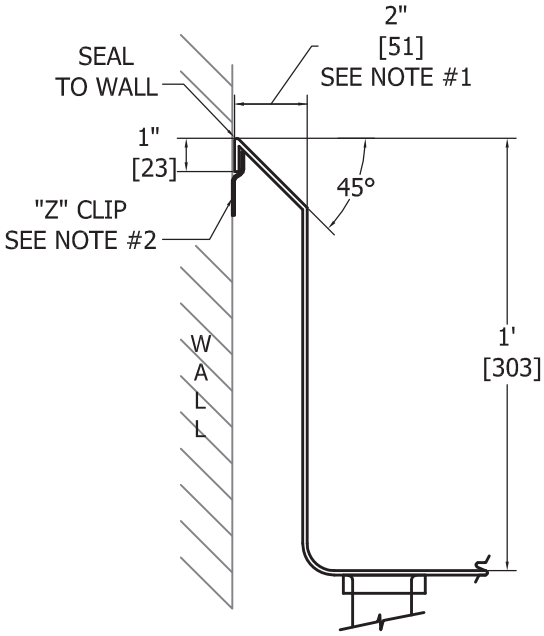

C STANDARD-INTERMEDIATE

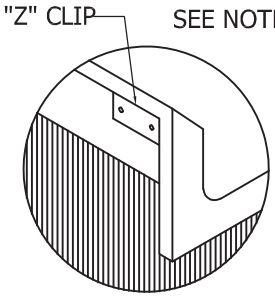

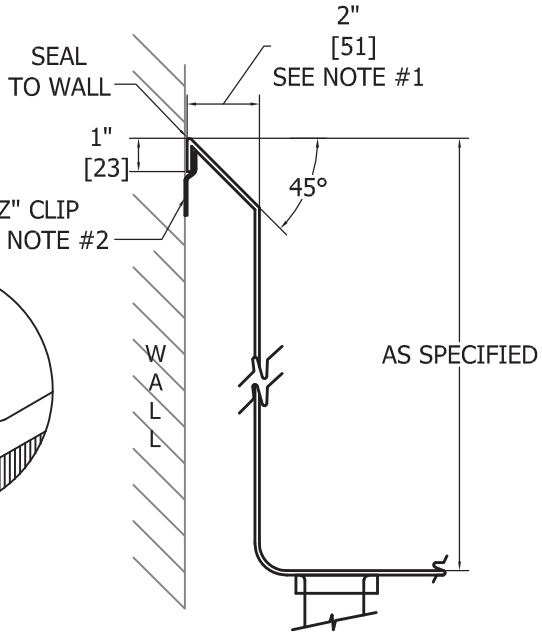

D STANDARD-EXTENDED

NOTES:

1. DEPTH INCREASED TO 2-1/2" [65mm] AT SINKS TO ALLOW FOR CONNECTED OVERFLOW.
2. 12 GA [2.7mm] S/S CLIP, 4" [100mm] LONG, FASTENED TO WALL AT EACH END OF UNIT AND 4'-0" [1200mm] O.C. SECURE TO WALL WITH A MINIMUM OF TWO. USE 1/4" [5mm] x 20 S/S BOLTS WITH TOGGLES OR EXPANSION SHIELDS.
3. EXPOSED ENDS TO BE ENCLOSED AND FULLY WELDED.
4. SEAL TO WALL ALL AROUND.

DETAIL #	DESCRIPTION:	
FD-1.2	SPLASHES	
	SCALE: N.T.S.	MATERIAL: 304 STAINLESS STEEL CONSTRUCTION

RJS + ASSOCIATES
INTEGRATED FOOD SERVICE DESIGN

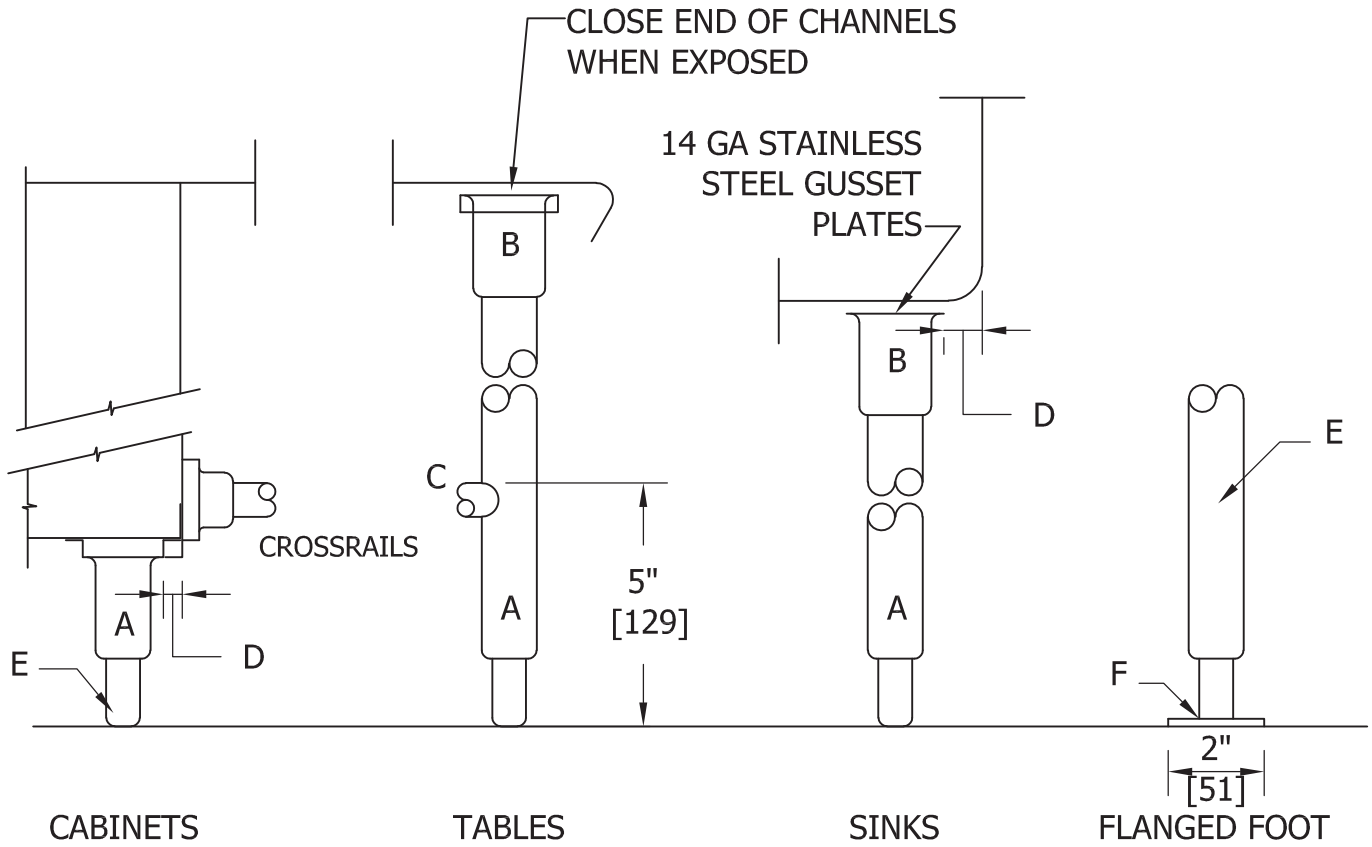

LEGEND:

A. LEGS TO BE 1⅝" O.D. 16 GA. [1.5mm] STAINLESS STEEL ASSEMBLY WITH BULLET FEET.
B. GUSSETS TO BE STAINLESS STEEL WITH SET SCREWS FOR SECURING LEGS.
FULLY WELD GRIND , SMOOTH AND POLISH GUSSETS TO CHANNELS OR GUSSET PLATES.
C. CROSSRAILS TO BE 1⅝" O.D. 16 GA. [1.5mm] STAINLESS STEEL TUBING FULLY WELDED TO LEGS. WHERE CROSSRAILS JOIN CABINET BODY, PROVIDE FLANGE SECURED WITH STAINLESS STEEL SCREWS.
D. 3/4" [20mm] MINIMUM CLEARANCE ALL AROUND.
E. FOOT SET AT MIDPOINT TO ALLOW 1"[25mm] ADJUSTMENT UP AND 1" [25mm] DOWN. WITHOUT THREAD EXPOSURE.
F. FLANGE FOOT TO FLOOR WITH COUNTERSUNK S/S BOLTS.

NOTE:
ENTIRE FINISHED STRUCTURE AND COMPONENTS TO MEET NSF REQUIREMENTS
MAINTAIN 6" [150mm] MINIMUM CLEARANCE BETWEEN FINISHED STRUCTURE & FLOOR.

DETAIL #	DESCRIPTION:	
FD-1.4	LEGS AND CROSSBRACING	
	SCALE: 3" = 1'-0"	MATERIAL: 304 STAINLESS STEEL CONSTRUCTION

RJS + ASSOCIATES
INTEGRATED FOOD SERVICE DESIGN

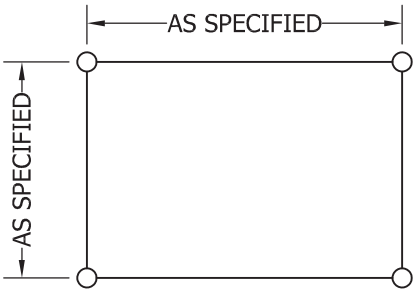

PLAN VIEW

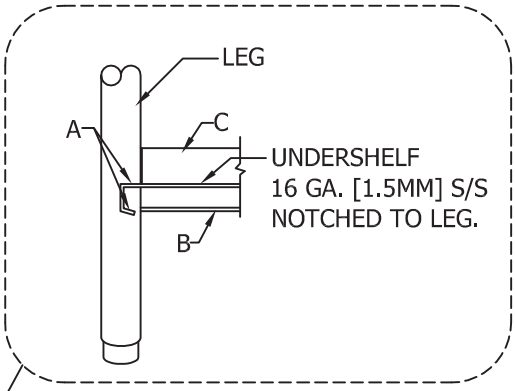

UNDERSHELF DETAIL

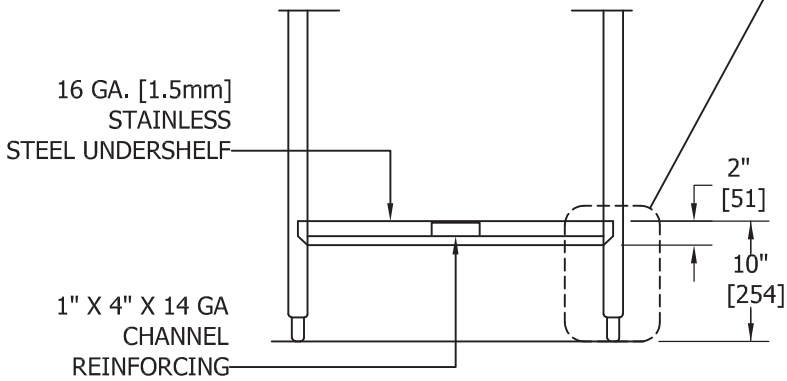

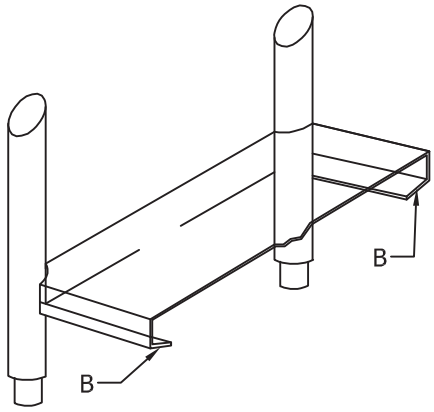

TYPICAL ISLAND APPLICATION

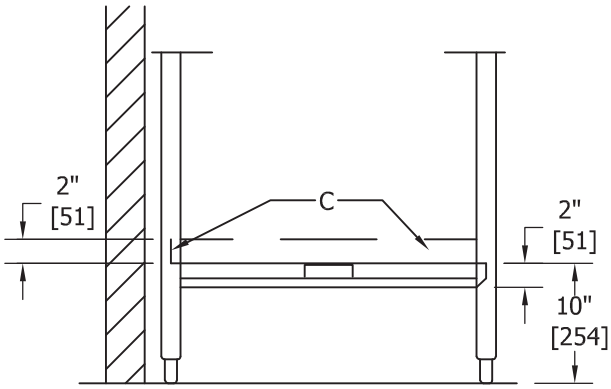

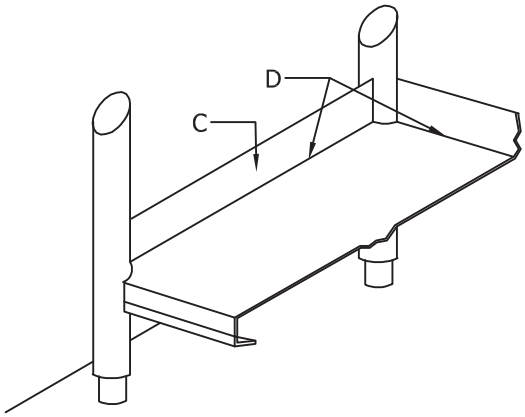

TYPICAL WALL APPLICATION

LEGEND:
A. FULLY WELD, GRIND, SMOOTH AND POLISH, WHEREVER SHELF INTERSECTS LEGS.
B. ISLAND TABLES, TURN DOWN ALL SIDES UNLESS OTHERWISE SPECIFIED.
C. TABLES AGAINST WALLS OR EQUIPMENT, TURN REAR AND ENDS AND SIDES UP 2" [50mm] UNLESS OTHERWISE SPECIFIED.
D. COVED BEND ACCEPTABLE, BUT NOT REQUIRED.

DETAIL #	DESCRIPTION:	
FD-1.8	UNDERSHELF	
	SCALE: 3/4" = 1'-0"	MATERIAL: 304 STAINLESS STEEL CONSTRUCTION

RJS + ASSOCIATES
INTEGRATED FOOD SERVICE DESIGN

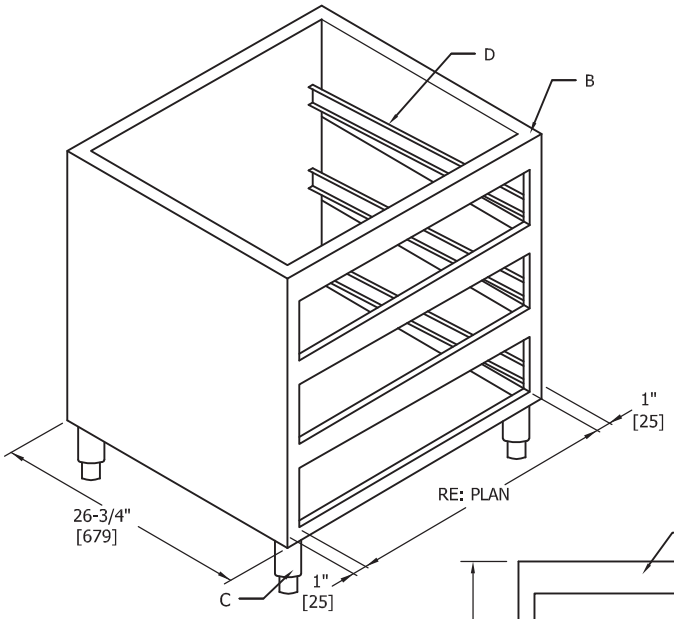

ISOMETRIC

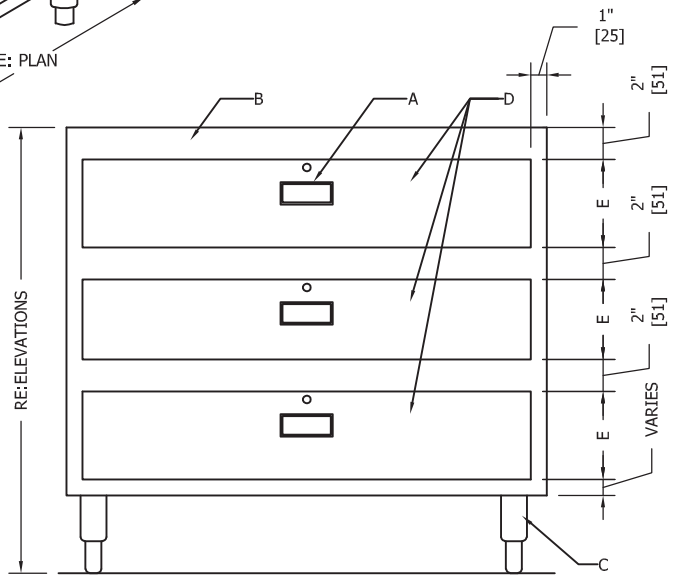

ELEVATION
THREE TIER

LEGEND:
A. RECESSED LOCK AND PULL OR AS SPECIFIED
B. 18 GA. [1.2mm] S/S HOUSING
C. ADJUSTABLE FEET
D. 18 GA. [1.2mm] DRAWERS W/ HEAVY DUTY GLIDES OR AS SPECIFIED
E. DRAWER SIZE VARIES DEPENDING ON QUANTITY

DETAIL #	DESCRIPTION:	
FD-1.5a	DRAWER ASSEMBLY	
	SCALE: 1" = 1'-0"	MATERIAL: 304 STAINLESS STEEL CONSTRUCTION

RJS + ASSOCIATES
INTEGRATED FOOD SERVICE DESIGN

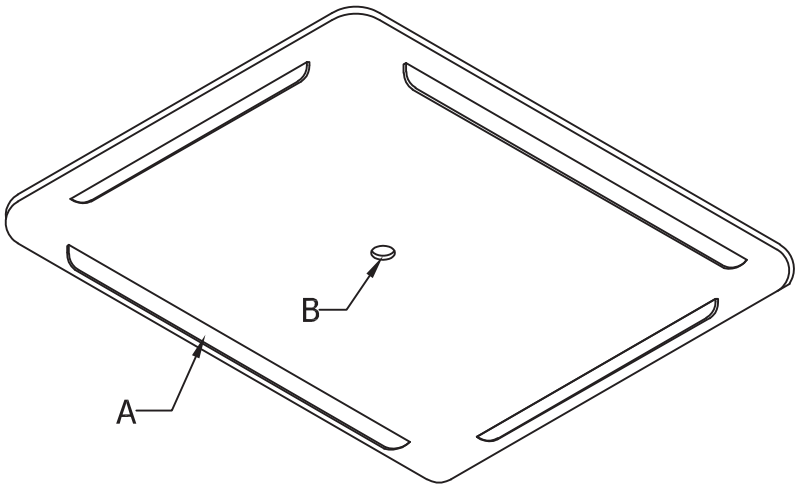

ISOMETRIC

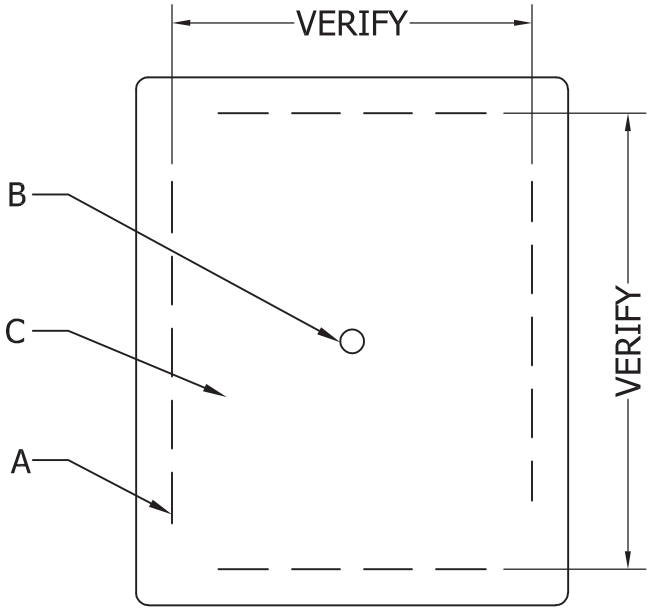

TOP VIEW

LEGEND:
A. STAINLESS STEEL FLANGE BELOW
B. 1" DIA. [25mm] FINGER PULL
C. 16 GA. [1.5mm] STAINLESS STEEL

DETAIL #	DESCRIPTION:	
FD-1.13	SINK COVER	
	SCALE: 1-1/2" = 1'-0"	MATERIAL: 304 STAINLESS STEEL CONSTRUCTION

RJS + ASSOCIATES
INTEGRATED FOOD SERVICE DESIGN

ITEM# 23A - DECK MOUNT FAUCET (1 EA REQ'D)

T&S Brass B-0220

Mixing Faucet, deck mount, 18" swing nozzle, 8" centers on deck faucet with 1/2" IPS eccentric flanged female inlets, quarter-turn Eterna cartridges with spring checks, lever handles, low lead, ADA Compliant

T&S BRASS AND BRONZE WORKS, INC.

2 Saddleback Cove / P.O. Box 1088
Travelers Rest, SC 29690

Travelers Rest, SC: 800-476-4103 • Simi Valley, CA: 800-423-0150 • Fax: 864-834-3518 • www.tsbrass.com

Model No.
B-0220

Item No.

This Space for Architect/Engineer Approval

Job Name_____Date_____

Model Specified_____ Quantity_____

Customer/Wholesaler_____

Contractor_____

Architect/Engineer_____

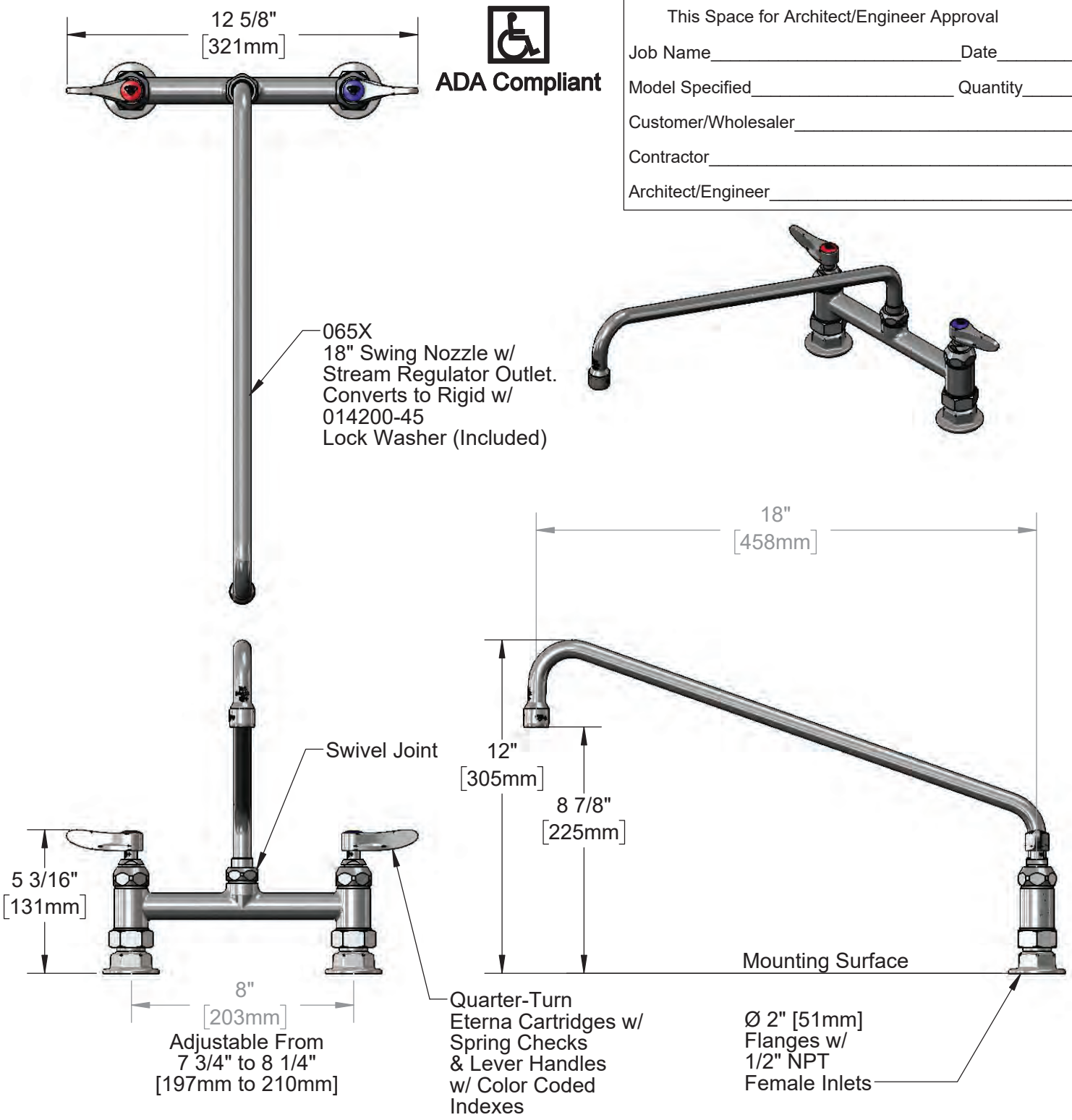

Product Specifications:

8" Deck Mount Mixing Faucet, Quarter-Turn Eterna Cartridges w/ Spring Checks, Lever Handles, 18" Swing Nozzle & 1/2" NPT Female Inlets

Product Compliance:

ASME A112.18.1 / CSA B125.1
NSF 61 - Section 9
NSF 372 (Low Lead Content)
ANSI A117.1 (ADA)

Drawn: MRC	Checked: JRM	Approved: JHB	Date: 05/01/18	Scale: 1:5	Sheet: 1 of 2

T&S BRASS AND BRONZE WORKS, INC.

2 Saddleback Cove / P.O. Box 1088
Travelers Rest, SC 29690

Travelers Rest, SC: 800-476-4103 • Simi Valley, CA: 800-423-0150 • Fax: 864-834-3518 • www.tsbrass.com

Model No.
B-0220

Item No.

ITEM NO.	SALES NO.	DESCRIPTION
1	B-PT	Stream Regulator Outlet
2	065X	18" Swing Nozzle
3	009538-45	Swivel Washer
4	011429-45	Swivel Sleeves (2)
5	001074-45	O-Ring
6	018506-19NS	Blue Button Index, Press-in
7	002711-40NS	Quarter-Turn Eterna Cartridge w/ Spring Check, Handle, Red Index & Screw, LTC
8	012442-40NS	Quarter-Turn Eterna Cartridge w/ Spring Check, LTC
9	001019-45	Coupling Nut Washer
10	00AA	1/2" NPT Female Eccentric Flange
11	014200-45	Star Washer, Anti-Rotation
12	012443-40NS	Quarter-Turn Eterna Cartridge w/ Spring Check, RTC
13	002712-40NS	Quarter-Turn Eterna Cartridge w/ Spring Check, Handle, Red Index & Screw, RTC
14	001638-45NS	Lever Handle (New Style)
15	001193-19NS	Red Button Index, Press-in
16	000925-45	Lab Handle Screw

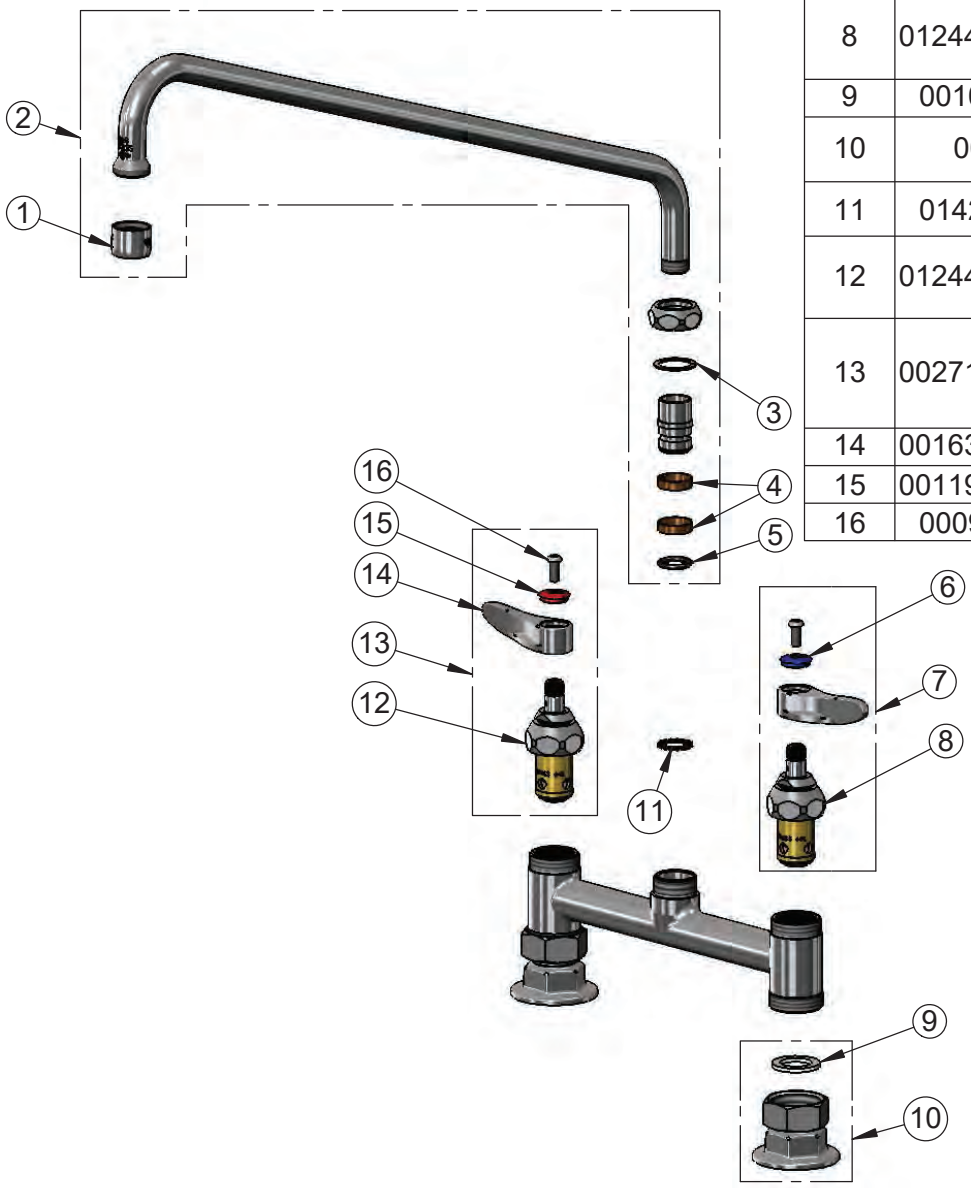

Product Specifications:

8" Deck Mount Mixing Faucet, Quarter-Turn Eterna Cartridges w/ Spring Checks, Lever Handles, 18" Swing Nozzle & 1/2" NPT Female Inlets

Product Compliance:

ASME A112.18.1 / CSA B125.1
NSF 61 - Section 9
NSF 372 (Low Lead Content)
ANSI A117.1 (ADA)

Drawn: MRC	Checked: JRM	Approved: JHB	Date: 05/01/18	Scale: NTS	Sheet: 2 of 2

RJS + ASSOCIATES
INTEGRATED FOOD SERVICE DESIGN

ITEM# 23B - POT RACK TABLE MOUNTED , W/SHELF (1 EA REQ'D)

fabctr STAINLESS STEEL

Similar to standard detail FD-1.16. This standard detail is to be utilized as a basic minimum guideline only. Refer to these written specifications and any fabrication details included in the contract drawings for precise and complete fabrication instructions.

ACCESSORIES

Mfr	Qty	Model	Spec
fabctr	1		Install in place as shown on plans using stainless steel fasteners.
fabctr	1		Length, width and configuration per plan.
fabctr	1		Verify and coordinate mounting height of shelves with Owner/Operator and equipment located below bottom shelf.
fabctr	1		Coordinate installation above Item #656, Table.
fabctr	1		Provide a Chase for the plumbing and drain for the hand sink.

RJS | Associates
Integrated Food Service Design

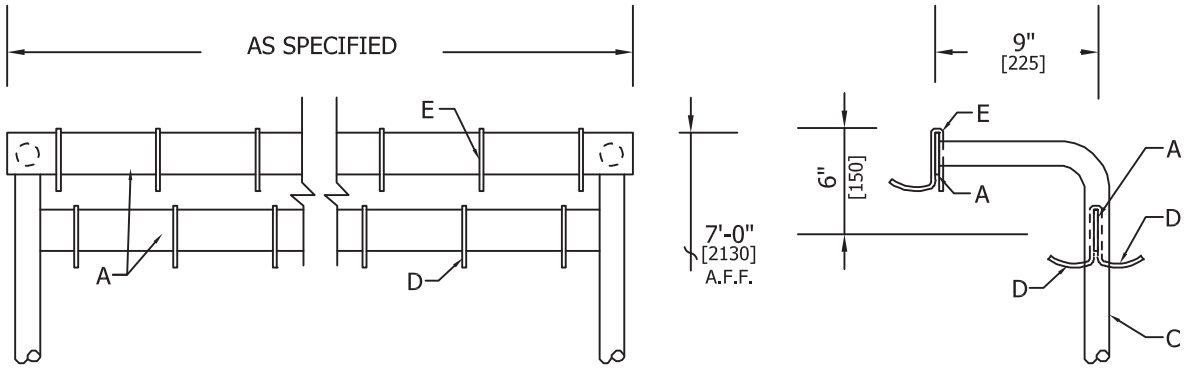

TABLE MOUNTED SINGLE SIDE
A

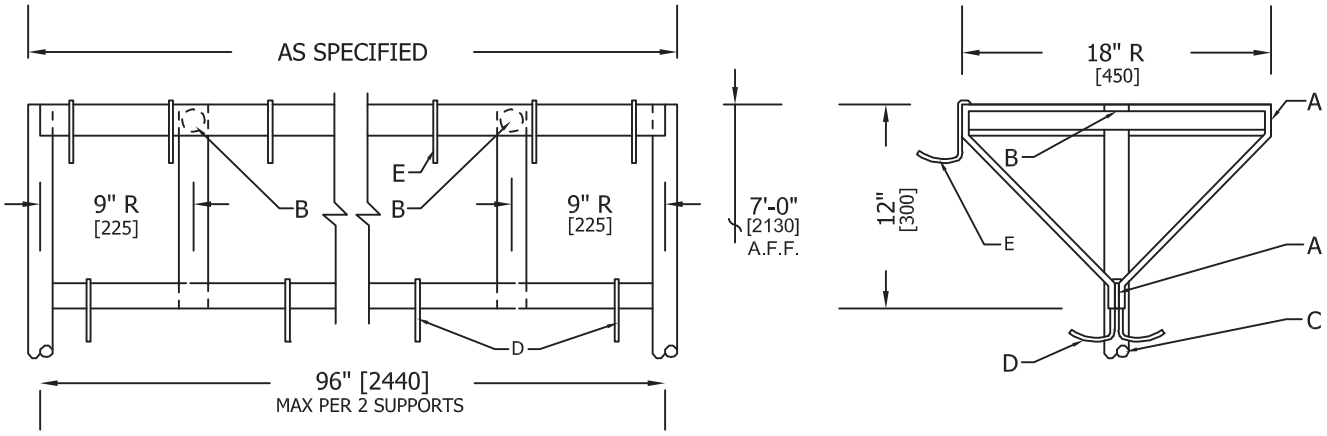

TABLE MOUNTED DOUBLE SIDE
B

LEGEND:

A. BANDS - ¼" x 2" [5mm x 50mm] STAINLESS STEEL BAR.
B. SPREADERS - 1" [25mm] DIA. 16 GA. [1.5mm] STAINLESS STEEL.
C. HOOKS - STAINLESS STEEL DOUBLE PRONG SNAP-OVER COMPONENT HARDWARE GROUP NO. 77-4401, 6" [150mm] O.C.
D. COMPONENT HARDWARE GROUP NO. J79-4115 HOOKS, 6" [150mm] O.C.

DETAIL #	DESCRIPTION:	
FD-1.16	POT AND UTENSIL RACKS	
	SCALE: N.T.S.	MATERIAL: 304 STAINLESS STEEL CONSTRUCTION

RJS + ASSOCIATES
INTEGRATED FOOD SERVICE DESIGN

ITEM# 23C - HOT / COLD FOOD WELL UNIT, DROP-IN, ELECTRIC (1 EA REQ'D)

Low Temp DI-QSCHP-4

QuickSwitch™ Hot/Cold/Freeze Food Well, drop-in, 64-3/4"W x 26-3/4"D x 21-16/25"H, 14ga stainless steel top, accommodates (4) 12" x 20" pan size, wired remote, individual wired remote digital controls for hot or cold operation, manifold drain, stainless steel top & wells, galvanized exterior, cUL, UL, UL EPH Classified (ANSI/NSF 4, ANSI/NSF 7)

ACCESSORIES

Mfr	Qty	Model	Spec
Low Temp	1		Some options may increase lead times
Low Temp	1		120/208v/60/1-ph, 14.4 amps, NEMA 14-20P
Low Temp	1	HUG	Hugged edge

QuickSwitch

Hot/Cold/Freeze Drop-Ins

Project: _____

Item: _____

Quantity: _____

Date: _____

Drop-in Models	Pans
❑ DI-QSCHP-1	1
❑ DI-QSCHP-2	2
❑ DI-QSCHP-3	3
❑ DI-QSCHP-4	4

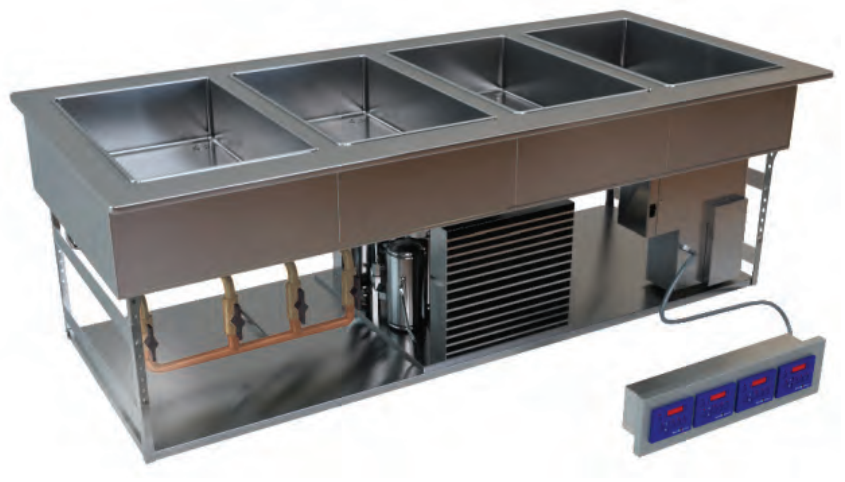

DI-QSCHP-4

U.L. Sanitation Classified to NSF Standards

ANSI/NSF169

- **Switch from hot to cold in a matter of minutes!**
- **Individual well flexibility**
- **Fully insulated, for use in any counter**
- **Fast, easy installation**
- **Labor saving easy to clean design**
- **Hot well wet or dry operation**

Standard Features

✓ Individual solid state digital controls
✓ Full sealing gasket
✓ 500 watts heat source(at 208V)
✓ Single power source
✓ Manifold drains

Optional Features (specify)

❑ Hugged edge (H)
❑ Slim line configuration
❑ Other voltage, phase,cycle (specify_____)

Number of Pans

❑ 1 Pan
❑ 2 Pan
❑ 3 Pan
❑ 4 Pan

Voltage

❑ 120V
❑ 120/208V
❑ 120/2408V

❑ **90˚ 1/2" Turn Down**

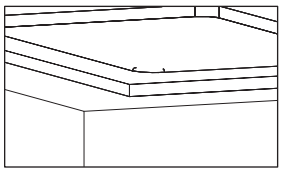

❑ **5˚ Hugged Edge**

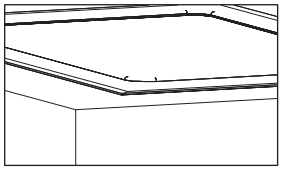

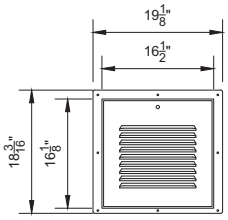

Each frame assembly comes standard with louver for customer side

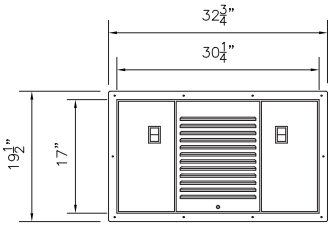

DI-QSP2-FRAME

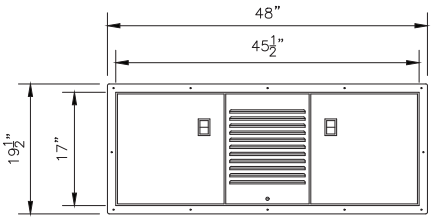

DI-QSP3-FRAME

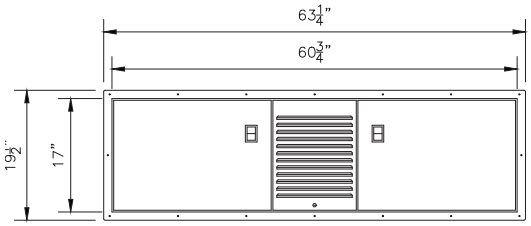

DI-QSP4-FRAME

Signature Required for Approval

Optional Ship Loose Feature: All Stainless Steel welded 16ga frame with 18ga Double Pan Hinged Latching Doors & 18ga Removable Louver.

❑ DI-QSP2-FRAME - Cut out for frame: 30-1/2" x 17-1/4"
❑ DI-QSP3-FRAME - Cut out for frame: 45-3/4" x 17-1/4"
❑ DI-QSP4-FRAME - Cut out for frame: 60" x 17-1/4"

REV 6/28/22

Changing how food is served.™

LTI, Inc.
1947 Bill Casey Parkway
Jonesboro, GA 30236
(888) 584-2722
lowtempind.com

Approvals:

Hot/Cold/Freeze Drop-Ins

QuickSwitch

Hot/Cold/Freeze Drop-Ins

A.I.A. File No. 00-0-00

SIS No. 00-0-00

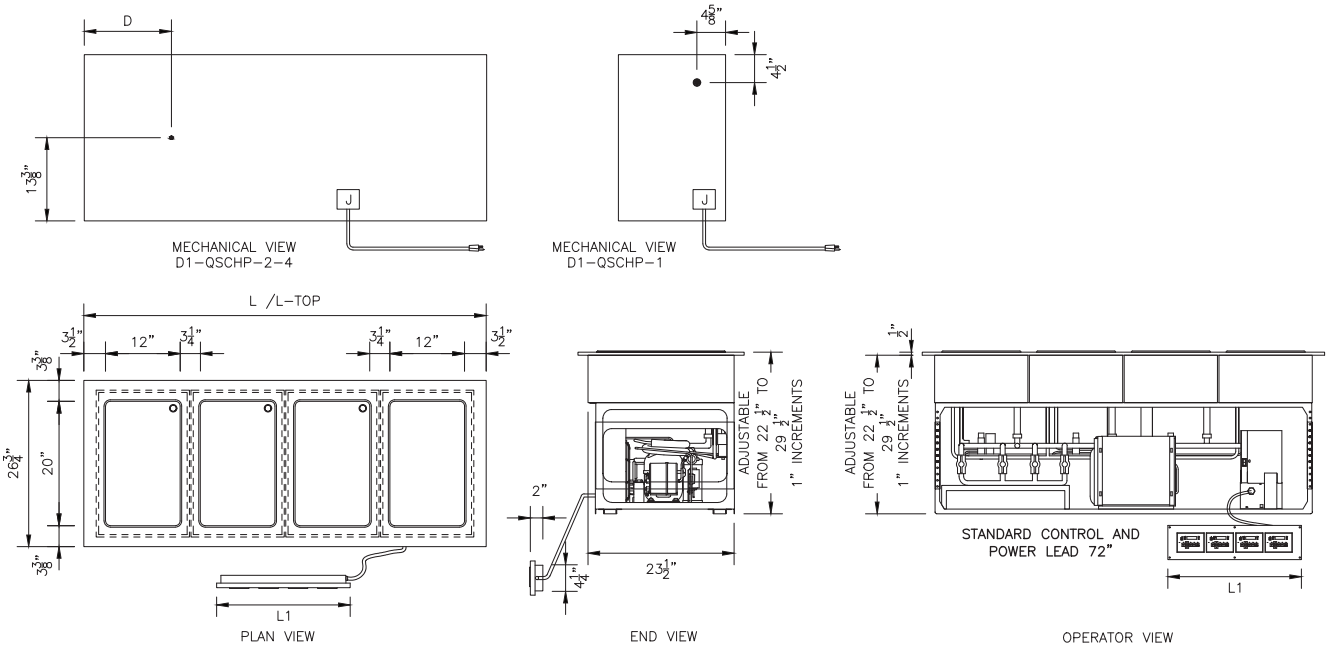

Model #	L - Top	L - Frame	Counter Cut-Out	Control Cut-Out - L1	DRAIN D1	120V/1		120/208V/1		120/240V/1	
						Amps	Plug	Amps	Plug	Amps	Plug
DI-QSCHP-1	17 1/4"	15"	15 3/8" x 24"	6 1/4" x 4 1/4"	N/A	7.2	5-15P	7.2	14-20P	7.2	14-20P
DI-QSCHP-2	34 1/4"	30 1/4"	30 5/8" x 24"	11" x 4 1/4"	4 3/4"	12.7	5-20P	9.6	14-20P	10.0	14-20P
DI-QSCHP-3	49 1/2"	45 1/2"	45 7/8" x 24"	15 3/4" x 4 1/4"	10 1/2"	18.2	5-30P	12.0	14-20P	12.7	14-20P
DI-QSCHP-4	64 3/4"	60 3/4"	61 1/8" x 24"	20 1/2" x 4 1/4"	14"	23.7	5-30P	14.4	14-20P	15.5	14-20P

General Specifications

Top perimeter frame to be constructed of 14 gauge stainless steel, welded, ground and polished with a thermal break provided between the top and refrigerated interior. Interior pan to be 18 gauge stainless steel, fully welded, ground and polished with a 3/4" open drain. To be fully insulated with 11/2" to 2" urethane insulation. The exterior jacket to be constructed of heavy gauge stainless steel.

Refrigeration system to be 1/3 hermetically sealed compressor operating on R-449A (HFC) refrigerant, and will include controls. New energy efficient hot food wells use digitally controlled, 500 watt heat source. All switches and controls are fully accessible and are provided with cord and plug. Lower frame is adjustable; overall height from 22 1/2" to 29 1/2".

Units to be UL listed and shall bear the UL classified EPH label for sanitation meeting all NSF4 and NSF7 requirements.

Adequate ventilation must be provided to ensure proper operations of this unit. A minimum louvered opening of 14" x 14" with thru air flow is recommended. A minimum of 330 cfm air flow across the condensing unit area is recommended. Failure to provide adequate ventilation will void manufacturer's warranty. Customer side access is required for service of unit.

Approval/Submittal (signature required)

Adherence to LTI installation instructions is required. Failure to do so may void the warranty.

Signature _____

Date _____

We reserve the right to change specifications and product design without notice. Such revisions do not entitle the buyer to corresponding changes, improvements, additions or replacement for previously purchased equipment.

All equipment to be built in accordance with the Underwriters Laboratories. Inc. and the National Sanitation Foundation, Inc. standards and shall bear the Underwriters Laboratories, Inc. listing label for safety and the Underwriters Laboratories classification label for sanitation.

Patent 8,307,761

REV 6/28/22

LTI, Inc.
1947 Bill Casey Parkway
Jonesboro, GA 30236
(888) 584-2722
lowtempind.com

Changing how food is served.™

RJS + ASSOCIATES
INTEGRATED FOOD SERVICE DESIGN

ITEM# 23D - MICROWAVE OVEN (1 EA REQ'D)

Panasonic NE-1025F

PRO Commercial Microwave Oven, 1000 Watts, 0.8 cu. ft. capacity, 6-minute electronic dial timer with auto-reset, bottom energy feed, shelf, interior light, stainless steel front, 120v/60/1-ph, 13.4 amps, cord, NEMA 5-15P, cULus, NSF

ACCESSORIES

Mfr	Qty	Model	Spec
Panasonic	1		1 year limited warranty

Project: _____ Item #: _____

Panasonic

NE-1025F

1000 WATT* COMMERCIAL MICROWAVE OVEN

FOOD SERVICE EQUIPMENT

PRO

www.panasonic.com/CMO

PERFECT FOR

- Vending
- Break Rooms
- Waitress Stations
- Front of House
- Concessions
- Convenience Stores

PERFORMANCE

- 1000 Watt Power
- 6 Minute electronic dial timer
- Auto reset feature
- Bottom energy feed

ADDITIONAL FEATURES

- Compact size
- Stainless steel front
- 0.8 cubic feet cavity
- Grab & Go door handle
- Fits 1 half-size, 6-inch deep steam table pan/cover
- Interior oven light
- See-through oven door
- Cord Length: 5'-5"
- Anti-theft equipped (see below)
- Security bolt
- Cord Length: 5'-5"
- Will ship via UPS
- NSF and UL commercial approved
- 1-Year Warranty (FS Channels)

BOTTOM ENERGY FEED

Energy travels less distance to reach the food, compared to side or top energy feed, for increased efficiency.

"GRAB & GO" DOOR HANDLE

Without moving parts like those found in trigger-activated or push-button handles, the "Grab & Go" door handle is fast, reliable and durable.

SPECIFICATIONS	NE-1025F
Power Source:	120V, 60Hz, Single Phase
Receptacle Required:	NEMA 5-15
Frequency:	2,450MHz
Required Power:	13.4A
Output:	1000 Watts*
Outer Dimensions: (w x d x h)	20-1/8" x 16-1/2" x 12"
Cavity Dimensions: (w x d x h)	13" x 13" x 8-1/16"
Net Weight:	34 lbs.
Shipping Weight:	40 lbs.
Shipping Box Size: (w x d x h)	24" x 18-3/4" x 14-3/4" – 3.8 cu. ft.
Timer:	6 Min. Electronic Dial w/ Auto Reset
Memory Capability:	N/A
Door / Cabinet / Cavity:	Stainless / Grey / White

The NE-1025F commercial microwave meets or exceeds all safety performance and sanitation standards set for commercial food service microwave ovens by UL, HHS, FCC and NSF.

NEMA 5-15

c UL us LISTED

NSF

Panasonic Commercial Food Service
Division of Panasonic Corporation of North America
2 Riverfront Plaza | Newark, NJ 07102
(201) 348-7000
www.panasonic.com/cmo

SECURITY / ANTI-THEFT OPTION

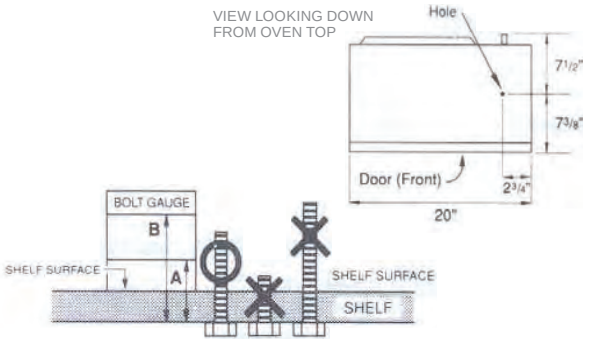

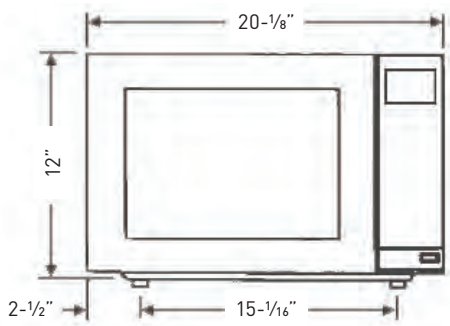

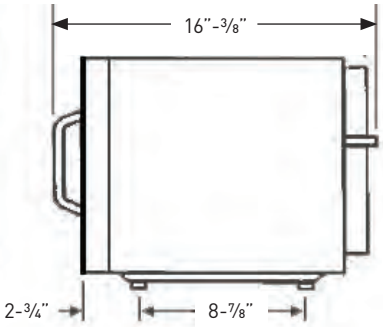

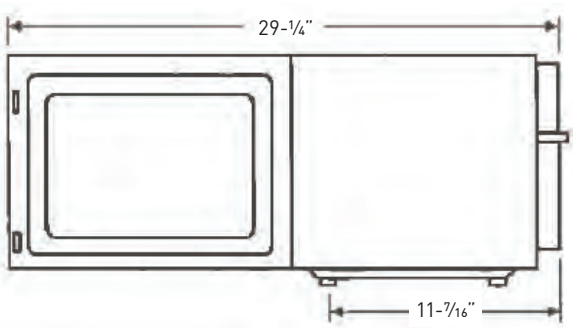

Colchester Senior Center

RJS + Associates

RJS + ASSOCIATES
INTEGRATED FOOD SERVICE DESIGN

ITEM# 24 - PLANETARY MIXER (1 EA REQ'D)

Hobart HL120-1

100-120/50/60/1; Bench type mixer; without attachments; US/EXP configuration - Legacy Planetary Mixer - Unit Only, Bench, 12 quart, (3) fixed/stir speed, gear-driven transmission, 15-Minute SmartTimer™, #12 taper hub, manual bowl lift, stainless steel bowl guard, 1/2 hp, cord with plug

ACCESSORIES

Mfr	Qty	Model	Spec
Hobart	1		Standard warranty - 1-Year parts, labor & travel time during normal working hours within the USA
Hobart	1	BOWL-HL12	Legacy® Mixer Bowl, 12 quart, stainless steel

HOBART

Project _____

AIA # _____ SIS # _____

Item # _____ Quantity _____ C.S.I. Section 114000

FOOD PREPARATION

HL120 LEGACY+

12-Quart Maximum Heavy-Duty Mixer

SPECIFIER STATEMENT

Specified mixer will be an NSF rated 12-quart maximum heavy-duty, all-purpose mixer with Hobart PLUS System, three fixed speeds plus a stir speed. Mixer has ½ HP output at the planetary shaft and all-gear transmission. Features include automatic time recall, swing-out bowl, Shift-on-the-Fly™ controls and manual bowl lift. Mixer finished with a metallic gray hybrid powder coat and has a stainless steel bowl guard.

MODEL

❑ **HL120** 12-Quart Maximum Heavy-Duty Mixer

STANDARD FEATURES

Features in bold are exclusive to Hobart

+ **PLUS System**
  - **VFD*advantage* variable frequency drive**
  - **Maximum capacity overheat protection**
  - **Reinforced planetary shaft system**
+ **Triple interlock system with MagnaLock technology**
+ Heavy-duty ½ HP motor
+ Gear transmission
+ Three fixed speeds, plus stir speed
+ **Shift-on-the-Fly™ controls**
+ Soft start agitation technology
+ **15-minute SmartTimer™**
+ Automatic time recall
+ Large, easy-to-reach controls
+ **Single point bowl installation**
+ **Ergonomic swing-out bowl**
+ #12 taper attachment hub
+ Open base
+ Metallic gray hybrid powder coat finish
+ Stainless steel removable bowl guard

ACCESSORY PACKAGE

Featuring Hobart Quick Release™ Agitators

❑ HL120-1STD Standard Accessory Package includes:
  + 12-quart stainless steel bowl
  + 12-quart "B" beater
  + 12-quart "D" wire whip

HL120 LEGACY+ 12-QUART MAXIMUM HEAVY-DUTY MIXER

Approved by _____ Date _____ Approved by _____ Date _____

HOBART

HL120 LEGACY+

12-Quart Maximum Heavy-Duty Mixer

SOLUTIONS/BENEFITS

PERFORMANCE

VFD*advantage* Variable Frequency Drive

- All-gear, direct drive system
- Ensures superior mixing consistency, motor protection and long life

Quick Release™ Agitators

- Eliminates the up/down play of bayonet-style agitators
- Consistent agitator-to-bowl ratio delivers superior mixing performance

Four Mixing Speeds

- Can handle virtually any mixing job
- Includes stir speed

Reinforced Planetary Shaft System

- Rugged durability under the most challenging mixing conditions

Maximum Capacity Overheat Protection

- Extreme-duty wiring and connections handle more power, reducing thermal cycling impact

EASE OF USE

Ergonomic Swing-Out Bowl

- Easily swing bowl to the side to remove/add ingredients
- Adds convenience and saves time

Single-Point Bowl Installation

- Easy-to-mount bowl uses only one point to install
- Reduces risk of spills, speeds up mixing process

Bowl Lift

- Ergonomic, smoothly moves bowl into mixing position

Shift-on-the-Fly™ Controls

- Allows safe, convenient speed changes while the motor is running
- Pulse and jog as needed

15-Minute SmartTimer™

- Automatic recall of time and speed

SANITATION & CLEANING

Stainless Steel Removable Bowl Guard

- Easy to remove without tools for cleaning
- Dishwasher-safe for easy cleaning and sanitizing

Soft Start Agitation Technology

- Gradually delivers electricity to the mixer
- Minimizes the risk of ingredient splash out

OPERATOR ASSURANCE

Triple Interlock System with MagnaLock Technology

- Prevents mixer from operating unless the bowl is fully up and locked in place and the bowl guard is secured

HL120 MIXER CAPACITY CHART

Recommended Maximum Capacities – dough capacities based on 70°F water and 12% flour moisture.

Product	Agitators Suitable for Operation	HL120
Capacity of Bowl (Qt. Liquid)		12
Egg Whites	D	1¼ pt.
Mashed Potatoes	B & C	10 lb.
Whipped Cream	D or C	2½ qt.
Cakes	B	12 lb.
Cookies, Sugar		10 lb.
Dough, Bread or Roll ★ (Lt.-Med.) 60% AR	ED	13 lb. ●
Dough, Heavy Bread 55% AR ★	ED	8 lb. ●
Dough, Thin Pizza 40% AR ★ (max. mix time 5 min.)	ED	5 lb. ●
Dough, Thick Pizza 60% AR ★	ED	11 lb. ●
Dough, Whole Wheat 70% AR	ED	11 lb. ●
Icing, Fondant	B	7 lb.
Icing, Marshmallow	C or I	1¼ lb.
Pasta, Basic Egg Noodle (max. mix time 5 min.)	—	—

Note: % AR (% Absorption Ratio) – Water weight divided by flour weight. Capacity depends on moisture content of dough. Above capacities based on 12% flour moisture at 70°F water temperature.

● 1st Speed

■ 2nd Speed

▲ 3rd Speed

★ If high gluten flour is used, reduce above dough batch size by 10%.

2nd speed should never be used on 50% AR or lower products.

Use of ice requires a 10% reduction in batch size.

1 gallon of water weighs 8.33 lbs.

Note: Attachment hub should not be used while mixing.

HL120 LEGACY+
12-Quart Maximum Heavy-Duty Mixer

SPECIFICATIONS

Motor: ½ HP high torque, 3-phase motor.

100-120/50/60/1 – 8.0 Amps
200-240/50/60/1 – 5.0 Amps

Electrical: 100-120/50/60/1, 200-240/50/60/1 – UL Listed.

Controls: Magnetic contactor and thermal overload protection. Internally sealed "Start-Stop" push buttons. A 15-minute SmartTimer™ is standard. SmartTimer™ includes:

- **Automatic Time Recall**, which remembers the last time set for each speed.
- **Transmission:** Gear-driven. Gears are constant mesh heat-treated hardened alloy steel along with anti-friction ball bearings. Grease lubricants furnished to all gears and shafts.

Speeds	Agitator (RPM)	Attachment (RPM)
Stir	59	33
First (Low)	107	61
Second (Intermediate)	198	113
Third (High)	365	207

Bowl Guard: Heavy-duty stainless steel wire front and solid rear portion. Front portion of guard rotates easily to add ingredients and install or remove agitator. It detaches in seconds for cleaning in dishwasher or sink. Rear portion of guard can be quickly cleaned in position. Guard must be in closed position before mixer will operate. Bowl support interlock provides further protection.

Bowl Lift: Ergonomic style, manual operated, self-locking in top and bottom position.

Finish: Metallic gray hybrid powder coat finish.

Attachment Hub: Comes with front-mounted Hobart standard #12 taper attachment hub for use with Hobart #12 size attachments.

Warranty: Unit has full one-year warranty on parts, labor and mileage against manufacturer's defects. Service contracts are available.

Attachments and Accessories:
The following are available at extra cost:

Attachment / Accessory	Device #
Stainless Steel Bowl	BOWL-HL12
"B" Flat Beater	BBEATER-HL12
"C" Wing Whip	CWHIP-HL12
"D" Wire Whip	DWHIP-HL12
"ED" Dough Hook	EDDOUGH-HL12
"P" Pastry Knife	PPASTRY-HL12
Mixer Table	TABLEHW-HL2012
Bowl Splash Cover (lexan)	SPLASH-LEX012
Bowl Scraper	SCRAPER-HL12
Ingredient Chute	CHUTE-HL12
9" Vegetable Slicer	VS9
Meat Chopper Attachment	12TIN-C/EPAN
Attachment Tray Support	TRAY-HL2012

Plugs and Receptacles:
Dependent on local power codes
X - Cord and Plus Standard
✓- Available at specified voltage, no plug and cord required

Machine Voltages		
HL120	**120/60/1**	**230/60/1**
Service Current Requirement if Plug Connected	120/60/1	230/60/1
	15 Amp.	15 Amp.
Terminal Designation of Plug	2 Pole 3 Wire Grounding	2 Pole 3 Wire Grounding
NEMA Plug Configuration	5-15P	6-15P
Plug Configuration		
Molded Plug on Cord	Yes	Yes
Plug - Straight/Angle	Straight	Straight
NEMA Receptable or Connector Configuration	5-15R	6-15R
Power Cord Included	Yes	Yes

HL120 LEGACY+

12-Quart Maximum Heavy-Duty Mixer

DETAILS AND DIMENSIONS

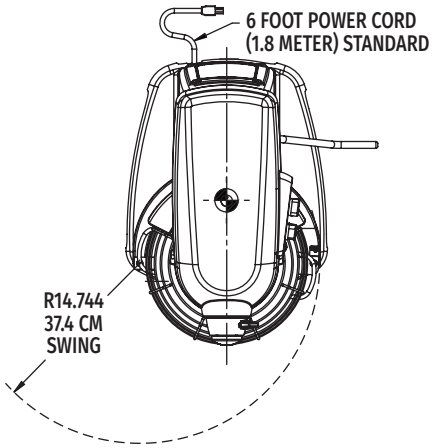

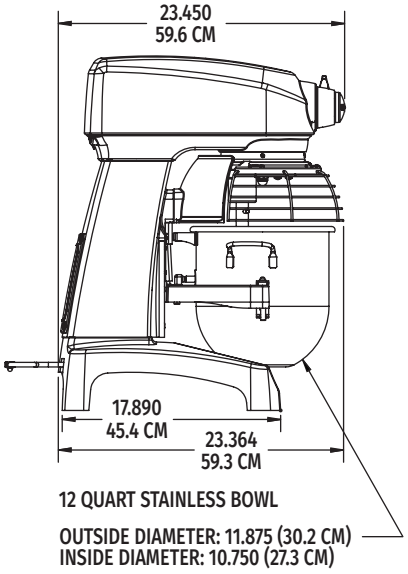

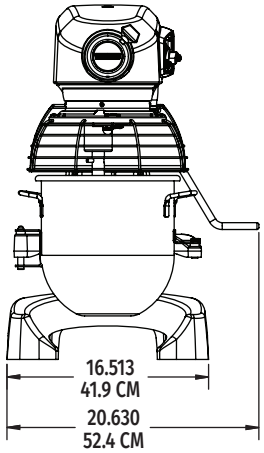

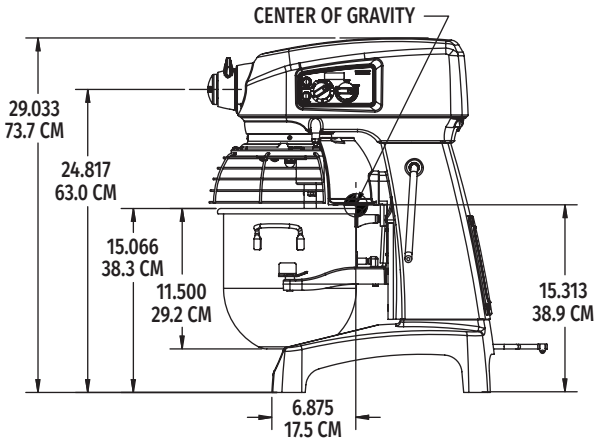

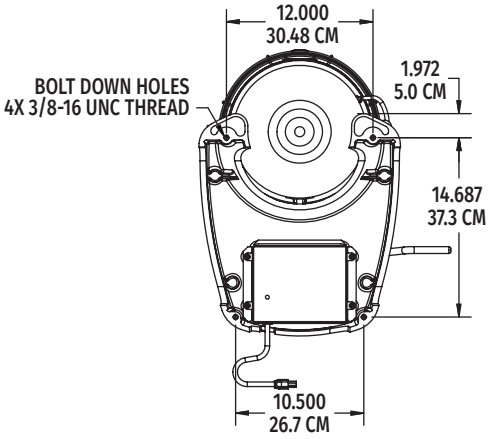

WARNING: **Electrical and grounding connections must comply with the applicable portions of the National Electrical Code and/or other codes in force.**

NOTE:
Machine Weight (Less Bowl): 187 lbs. (84.8 kg)
Shipping Weight: 202 lbs. (91.6 kg)
Bowl Weight: 7.5 lbs. (3.4 kg)

As continued product improvement is a policy of Hobart, specifications are subject to change without notice.

CAD and/or Revit Files Available

Legacy Mixer Accessories & Applications

Mixer Table

For use when mixer will not be put on a counter. There are also prongs to place accessories.

Bowl Scraper

Used for scraping the sides of the bowl after operation.

B Flat Beater

Great for mashing potatoes, mixing cakes, batters, icings and creaming/uniform dispersion of ingredients. Use 1st speed for starting and medium speed for finishing.

D Wire Whip

Good for heavy whipping. Applications include light creaming and beating, potatoes, butter, mayonnaise, and light icing. Use in 1st or 2nd speed for heavier products such as potatoes or in 3rd or 4th speed for lighter products like icing.

C Wing Whip

Best for maximum blending of air into light products. Applications include whipping cream, beating egg whites, light icings and meringues. Use in 3rd or 4th speed for best results.

E Dough Hook

Used for mixing, stretching, and folding most bread, roll, and pizza doughs. Also good for lighter breads.

ED Dough Hook

Used for mixing, stretching, and folding most bread, roll, and pizza doughs. Use in 1st, 2nd, or 3rd speed for 2 and 3 speed mixers. Use in 1st, 2nd, or 3rd speed for 4 speed mixers.

I Heavy-Duty Wire Whip

Great for heavy whipping. Applications include sponge cakes and light marshmallow. Use in 3rd or 4th speed for best results.

P Pastry Knife

Combines shortening with flour, and is ideal for light pastry shells, flaky pie doughs, and similar mixes. For stirring, use low speeds, for cutting use medium speeds.

Bowl Truck

Use to remove the bowl from the mixer to desired location. The bowl truck saves time, reduces handing, and improves work flow.

Bowl Adapter

Use to remove a 40 or 60 qt. bowl with a larger bowl truck with this adapter.

Ingredient Chute

Used for adding ingredients while mixing. The ingredient chute attaches to the wire cage on the bowl guard.

Legacy® HL200 Maximum Heavy-Duty mixer

The only solution for kitchens that mix challenging heavy-duty doughs or batters, may mix continuously batch after batch, and require superior mixing performance time after time.

Variable Frequency Drive (VFD)

All-gear, direct drive system ensures superior mixing consistency, motor protection and 3 times longer life.*

Four mixing speeds

Includes ultra-slow stir speed for maximum convenience.

Quick-Release™ agitators

Changing is fast and easy. Pin locks agitator to shaft, eliminating the up/down play of bayonet-style agitators. The consistent agitator-to-bowl ratio, delivers **superior mixing performance.**

Removable bowl guard

Easy to remove without tools for cleaning and sanitizing.

Ergonomic bowl lift

Smoothly moves the bowl into mixing position.

Triple interlock system

Prevents mixer from operating unless the bowl is fully up and locked in place and the bowl guard is secured.

Soft start

Minimizes risk of ingredient splash-out for less cleanup time.

Shift-on-the-Fly™ technology

No need to stop the machine to change speeds.

SmartTimer™ feature

Automatically recalls the last time set for each speed, making it easy to mix multiple batches of the same product.

Single-point bowl installation

Simpifies attaching the bowl to the mixer.

Swing-out bowl

Patented feature adds convenience and saves time.

Hobart Ownership Benefits

= Hobart Exclusive Benefits
= Sanitation & Cleaning
= Performance
= Operator Assurance
= Ease of Use

*Versus standard heavy-duty mixer products

HOBART

hobartcorp.com
1-888-4HOBART (1-888-446-2278)
1-937-332-3000

Hobart
701 S. Ridge Ave.
Troy, Ohio 45374

ITW FOOD EQUIPMENT GROUP

F40934 (04/19)

RJS + ASSOCIATES
INTEGRATED FOOD SERVICE DESIGN

ITEM# 25 - WORK TABLE (1 EA REQ'D)

fabctr STAINLESS STEEL

See plans for location and placement of item with reference to adjoining equipment.

ACCESSORIES

Mfr	Qty	Model	Spec
fabctr	1		Similar to standard details FD-1.1A, FD-1.2A, FD-1.4, FD-1.5a, FD-1.8, FD-4.4 and FD-4.5. These standard details are to be utilized as basic minimum guidelines only. Refer to these written specifications and any fabrication details included in the contract drawings for precise and complete fabrication instructions.

RJS + ASSOCIATES
INTEGRATED FOOD SERVICE DESIGN

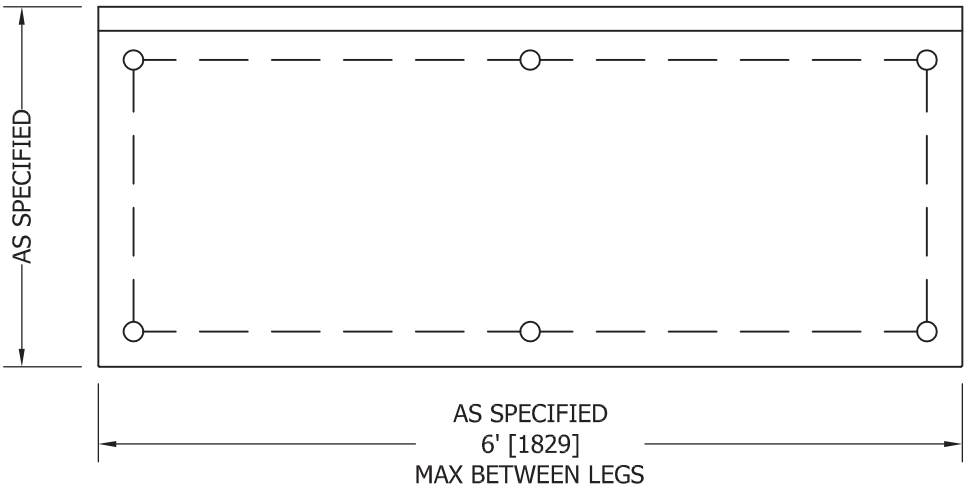

PLAN VIEW

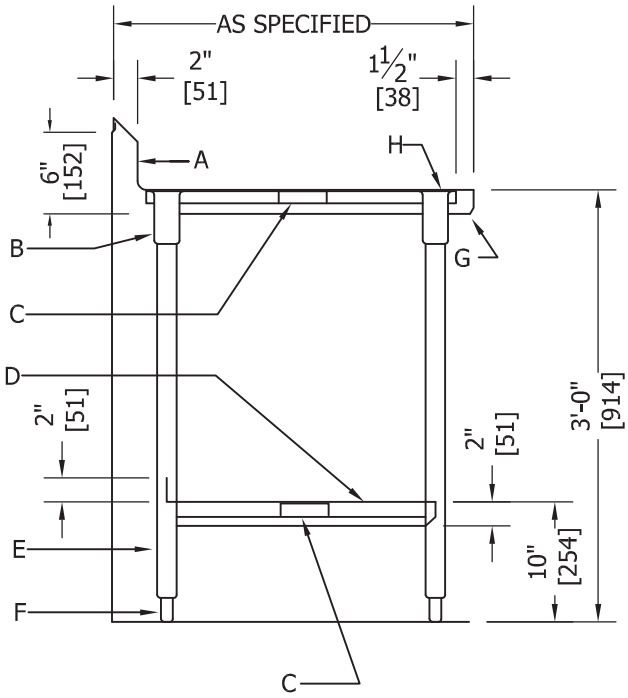

SECTION VIEW

LEGEND:
A. BACKSPLASH DETAIL AS SPECIFIED
B. STAINLESS STEEL GUSSET
C. CHANNEL REINFORCING
D. UNDERSHELF (SEE DETAIL FD-1.8)
E. 1-5/8" ø x 16 GA. [1.5mm] LEGS & CROSSRAILS
F. ADJUSTABLE FEET (DETAIL FD-1.4)
G. EDGE DETAIL AS SPECIFIED
H. 14 GA. [1.8mm] STAINLESS STEEL TOP

NOTES:
1. MATERIAL TO BE 14 GA. [1.8mm] STAINLESS STEEL
2. ENTIRE UNIT TO BE ALL WELDED COVE CORNERED CONSTRUCTION WITH VERTICAL AND HORIZONTAL AND INTERIOR CORNERS HAVING A 3/4" [20mm] RADIUS.

DETAIL #	DESCRIPTION:	
FD-4.4	WORK TABLE W/ UNDERSHELF	
	SCALE: 3/4" = 1'-0"	MATERIAL: 304 STAINLESS STEEL CONSTRUCTION

RJS + ASSOCIATES
INTEGRATED FOOD SERVICE DESIGN

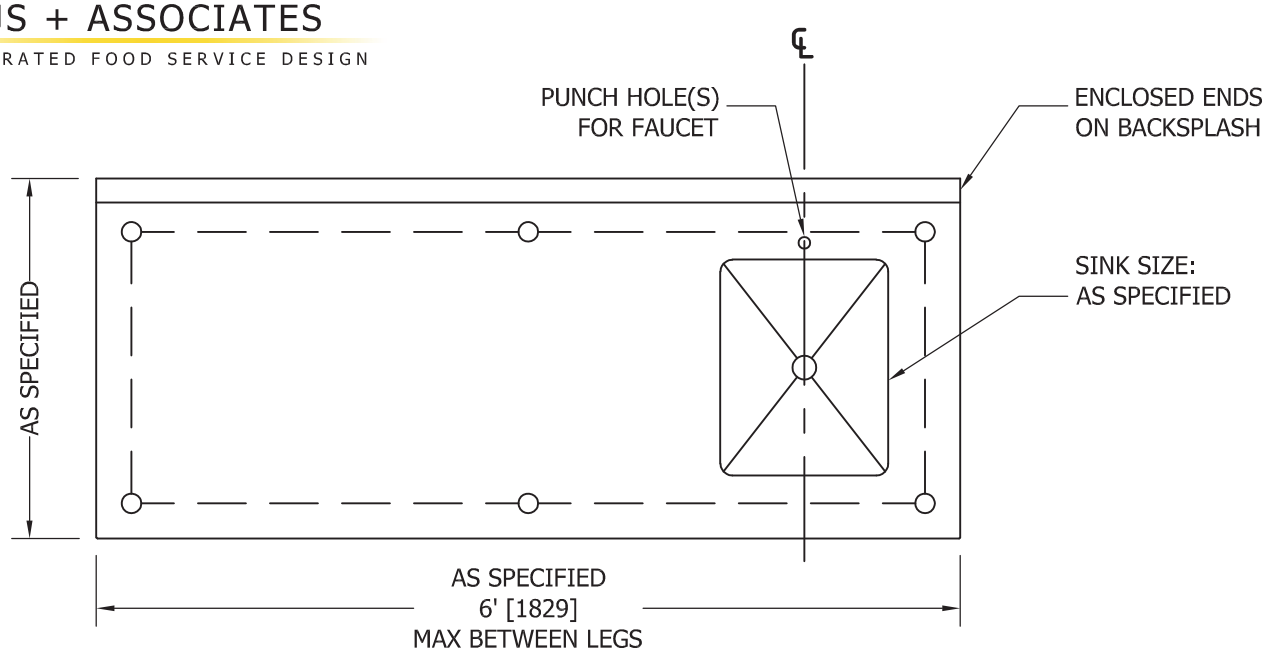

PLAN

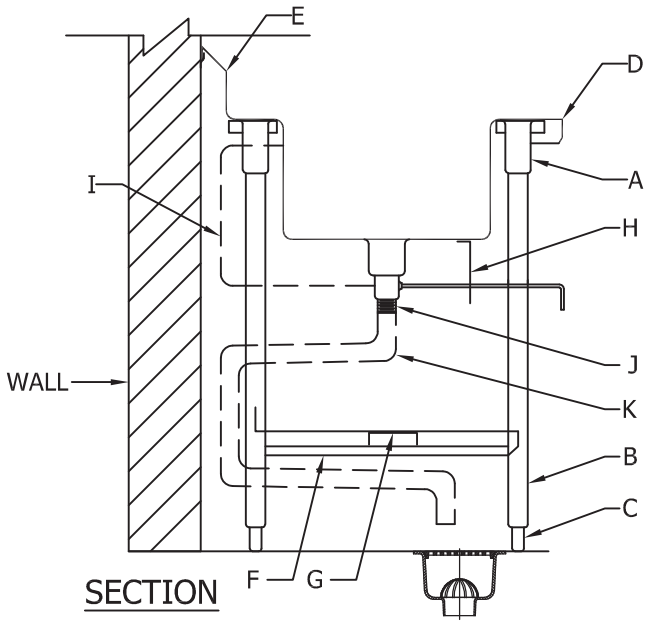

SECTION

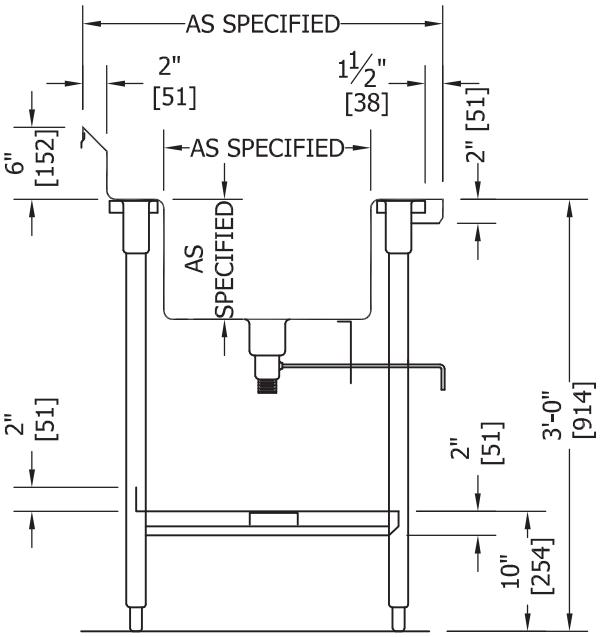

SECTION

LEGEND:
A. STAINLESS STEEL GUSSET
B. 1-5/8" ϕ X 16 GA. [1.5mm] LEGS AND CROSSRAILS
C. ADJUSTABLE FEET (SEE DETAIL FD-1.4)
D. EDGE DETAIL AS SPECIFIED
E. BACKSPLASH DETAIL AS SPECIFIED
F. 16 GA. [1.5mm] S/S UNDERSHELF (SEE DETAIL FD-1.8)
G. CHANNEL REINFORCING
H. WASTE LEVER BRACKET (SEE DETAIL FD-1.15)
I. OVERFLOW AS REQUIRED
J. DRAIN SIZE AS SPECIFIED
K. RECOMMENDED DRAIN LINE INSTALLATION

NOTES:
1. MATERIAL TO BE 14 GA. [1.9mm] STAINLESS STEEL
2. ENTIRE UNIT TO BE ALL WELDED COVE CORNERED CONSTRUCTION WITH VERTICAL AND HORIZONTAL AND INTERIOR CORNERS HAVING A 3/4" [20mm] RADIUS.
3. ENTIRE SINK COMPARTMENT TO BE PITCHED AND CREASED TO WASTE TO ASSURE COMPLETE DRAINING WITHOUT POOLING.

DETAIL #	DESCRIPTION:	
FD-4.5	WORK TABLE W/ SINK & UNDERSHELF	
	SCALE: 3/4" = 1'-0"	MATERIAL: 304 STAINLESS STEEL CONSTRUCTION

RJS + ASSOCIATES
INTEGRATED FOOD SERVICE DESIGN

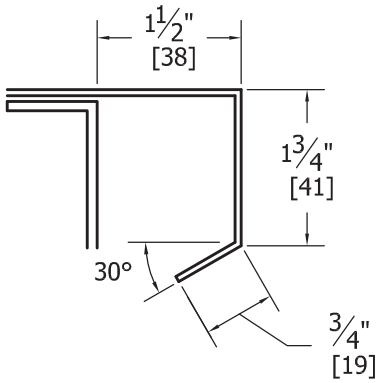

A TURN-DOWN

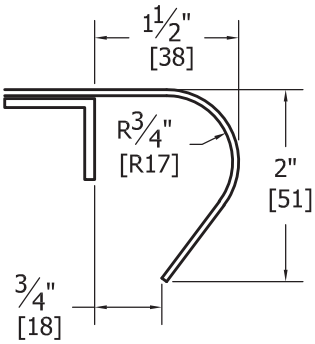

B BULLNOSE

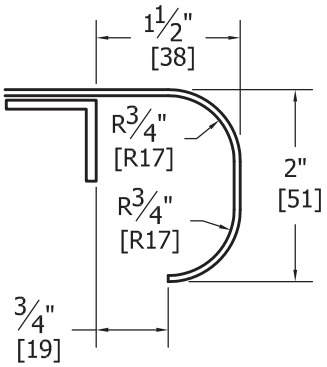

C ROLLED FLAT

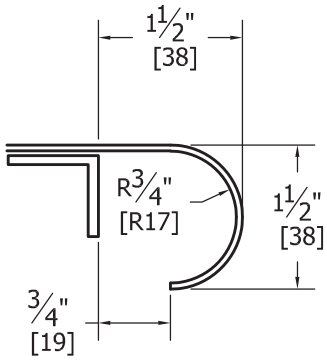

D ROLLED

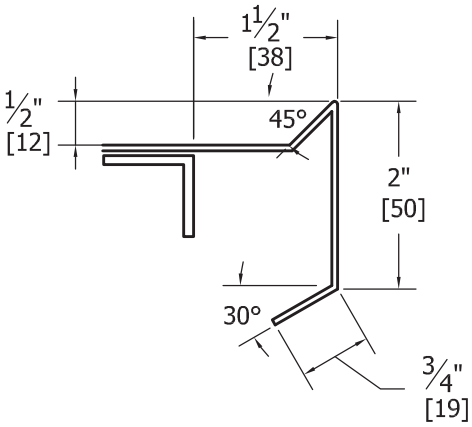

E DIE-CRIMPED

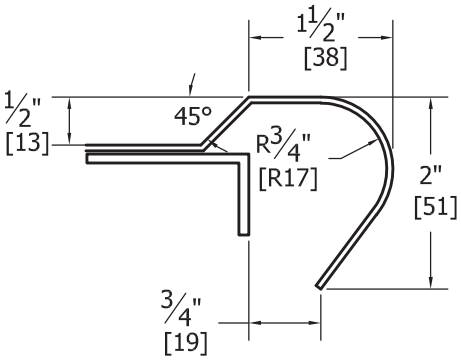

F MARINE-BULLNOSED

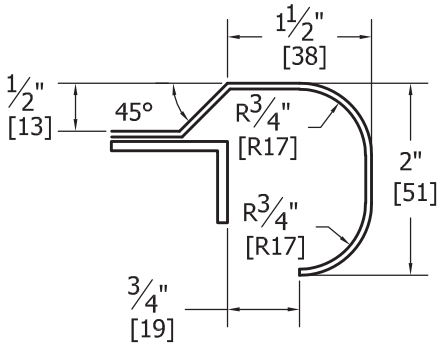

G MARINE-ROLLED FLAT

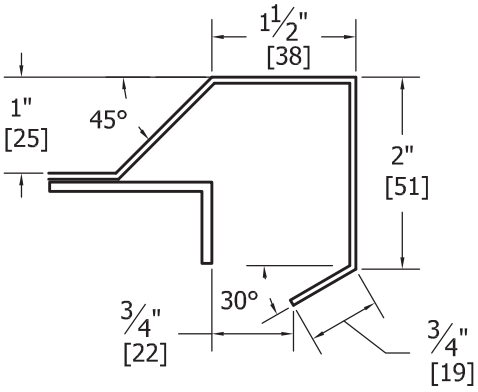

H MARINE

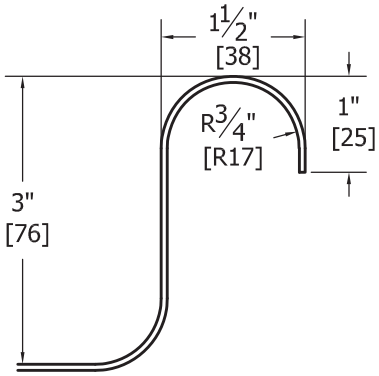

I RAISED ROLLED

DETAIL #	DESCRIPTION:	
FD-1.1	EDGES	
	SCALE: 6" = 1'-0"	MATERIAL: 304 STAINLESS STEEL CONSTRUCTION

RJS + ASSOCIATES
INTEGRATED FOOD SERVICE DESIGN

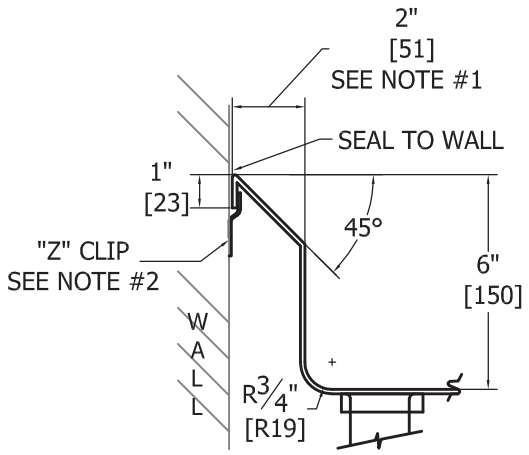

A STANDARD

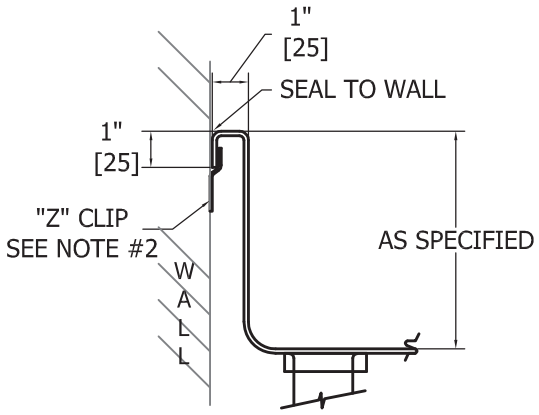

B SQUARE TURNBACK

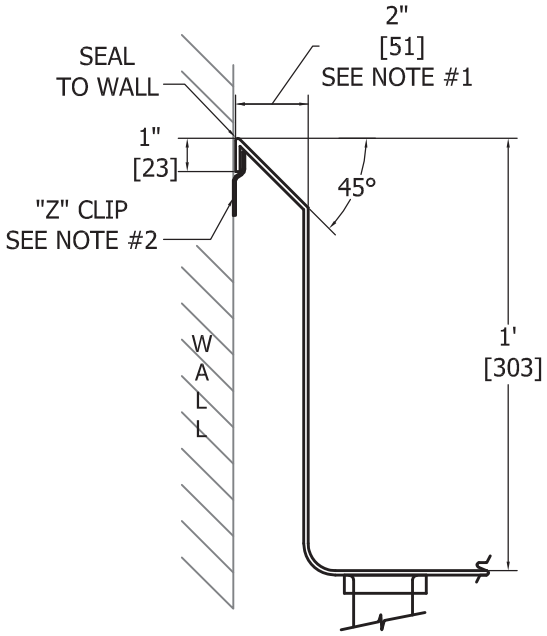

C STANDARD-INTERMEDIATE

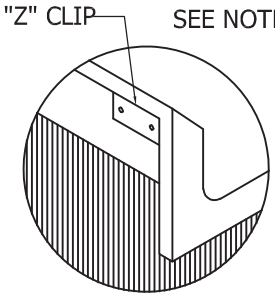

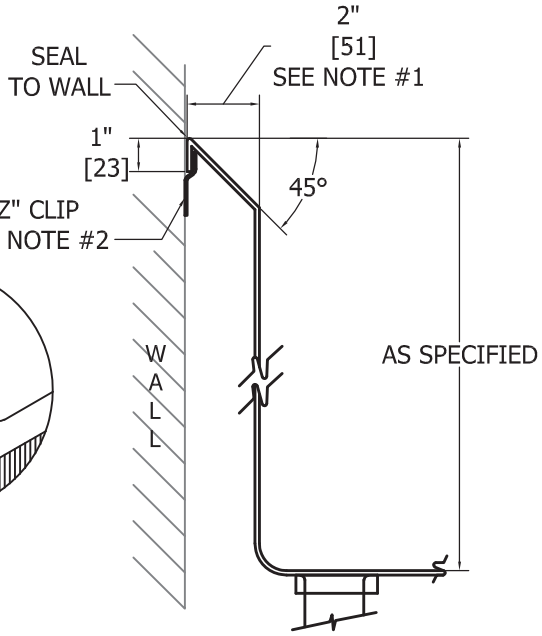

D STANDARD-EXTENDED

NOTES:

1. DEPTH INCREASED TO 2-1/2" [65mm] AT SINKS TO ALLOW FOR CONNECTED OVERFLOW.
2. 12 GA [2.7mm] S/S CLIP, 4" [100mm] LONG, FASTENED TO WALL AT EACH END OF UNIT AND 4'-0" [1200mm] O.C. SECURE TO WALL WITH A MINIMUM OF TWO. USE 1/4" [5mm] x 20 S/S BOLTS WITH TOGGLES OR EXPANSION SHIELDS.
3. EXPOSED ENDS TO BE ENCLOSED AND FULLY WELDED.
4. SEAL TO WALL ALL AROUND.

DETAIL #	DESCRIPTION:	
FD-1.2	SPLASHES	
	SCALE: N.T.S.	MATERIAL: 304 STAINLESS STEEL CONSTRUCTION

RJS + ASSOCIATES
INTEGRATED FOOD SERVICE DESIGN

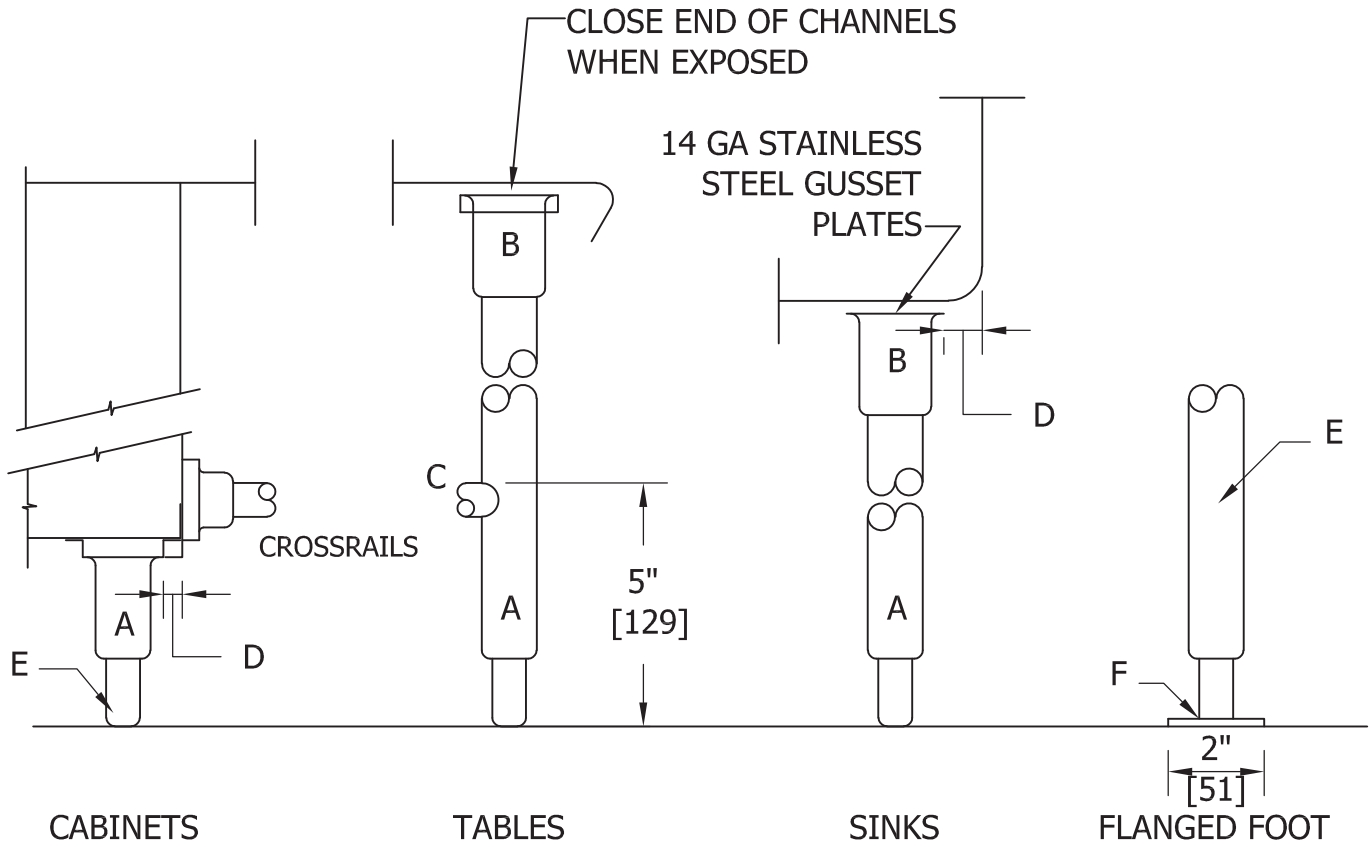

LEGEND:

A. LEGS TO BE 1⅝" O.D. 16 GA. [1.5mm] STAINLESS STEEL ASSEMBLY WITH BULLET FEET.
B. GUSSETS TO BE STAINLESS STEEL WITH SET SCREWS FOR SECURING LEGS.
FULLY WELD GRIND , SMOOTH AND POLISH GUSSETS TO CHANNELS OR GUSSET PLATES.
C. CROSSRAILS TO BE 1⅝" O.D. 16 GA. [1.5mm] STAINLESS STEEL TUBING FULLY WELDED TO LEGS. WHERE CROSSRAILS JOIN CABINET BODY, PROVIDE FLANGE SECURED WITH STAINLESS STEEL SCREWS.
D. 3/4" [20mm] MINIMUM CLEARANCE ALL AROUND.
E. FOOT SET AT MIDPOINT TO ALLOW 1"[25mm] ADJUSTMENT UP AND 1" [25mm] DOWN. WITHOUT THREAD EXPOSURE.
F. FLANGE FOOT TO FLOOR WITH COUNTERSUNK S/S BOLTS.

NOTE:
ENTIRE FINISHED STRUCTURE AND COMPONENTS TO MEET NSF REQUIREMENTS
MAINTAIN 6" [150mm] MINIMUM CLEARANCE BETWEEN FINISHED STRUCTURE & FLOOR.

DETAIL #	DESCRIPTION:	
FD-1.4	LEGS AND CROSSBRACING	
	SCALE: 3" = 1'-0"	MATERIAL: 304 STAINLESS STEEL CONSTRUCTION

RJS + ASSOCIATES
INTEGRATED FOOD SERVICE DESIGN

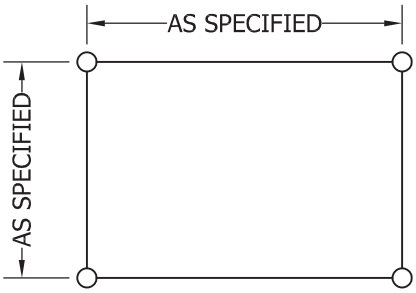

PLAN VIEW

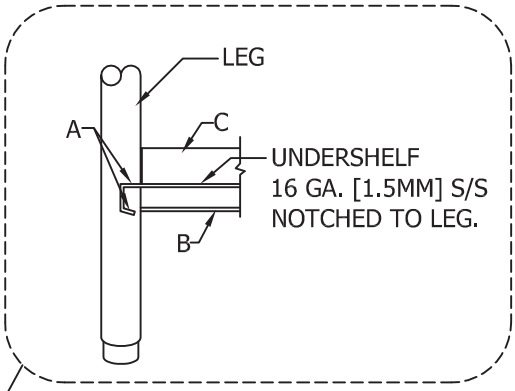

UNDERSHELF DETAIL

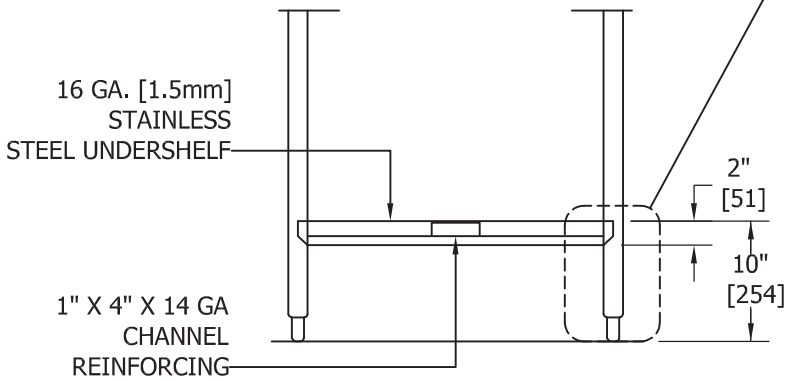

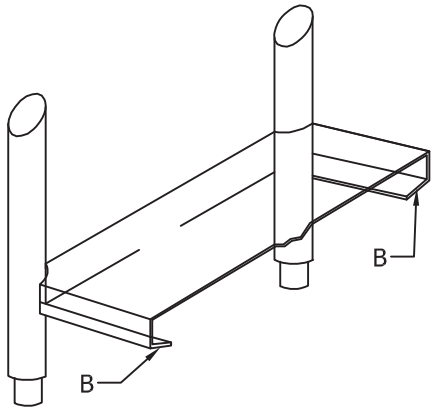

TYPICAL ISLAND APPLICATION

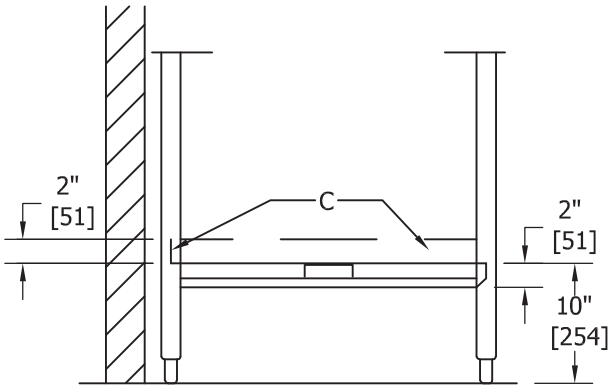

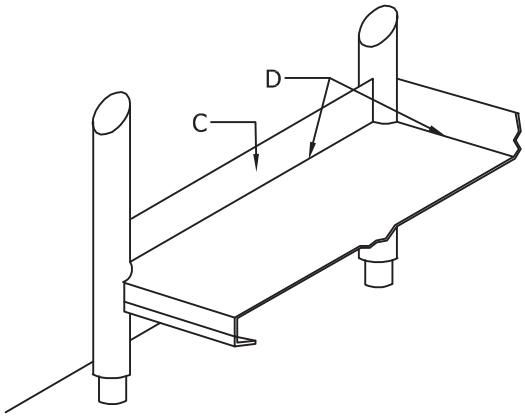

TYPICAL WALL APPLICATION

LEGEND:
A. FULLY WELD, GRIND, SMOOTH AND POLISH, WHEREVER SHELF INTERSECTS LEGS.
B. ISLAND TABLES, TURN DOWN ALL SIDES UNLESS OTHERWISE SPECIFIED.
C. TABLES AGAINST WALLS OR EQUIPMENT, TURN REAR AND ENDS AND SIDES UP 2" [50mm] UNLESS OTHERWISE SPECIFIED.
D. COVED BEND ACCEPTABLE, BUT NOT REQUIRED.

DETAIL #	DESCRIPTION:	
FD-1.8	UNDERSHELF	
	SCALE: 3/4" = 1'-0"	MATERIAL: 304 STAINLESS STEEL CONSTRUCTION

RJS + ASSOCIATES
INTEGRATED FOOD SERVICE DESIGN

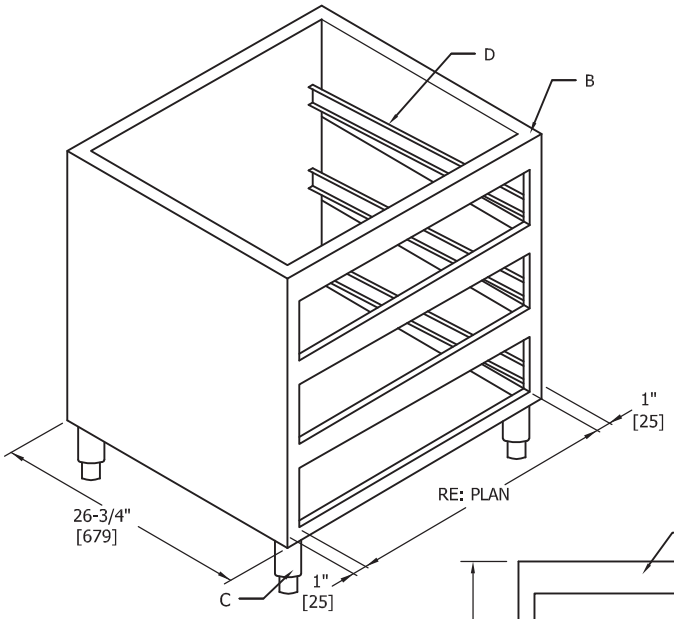

ISOMETRIC

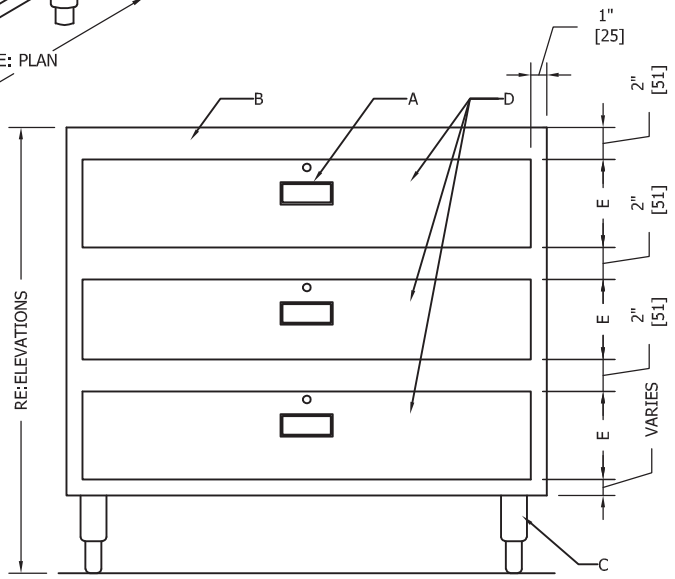

ELEVATION
THREE TIER

LEGEND:
A. RECESSED LOCK AND PULL OR AS SPECIFIED
B. 18 GA. [1.2mm] S/S HOUSING
C. ADJUSTABLE FEET
D. 18 GA. [1.2mm] DRAWERS W/ HEAVY DUTY GLIDES OR AS SPECIFIED
E. DRAWER SIZE VARIES DEPENDING ON QUANTITY

DETAIL #	DESCRIPTION:	
FD-1.5a	DRAWER ASSEMBLY	
	SCALE: 1" = 1'-0"	MATERIAL: 304 STAINLESS STEEL CONSTRUCTION

RJS + ASSOCIATES
INTEGRATED FOOD SERVICE DESIGN

ITEM# 25A - WALL SHELF (1 EA REQ'D)

fabctr STAINLESS STEEL

See plans for location and placement of item with reference to adjoining equipment.

ACCESSORIES

Mfr	Qty	Model	Spec
fabctr	1		Similar to standard detail FD-3.1. This standard detail is to be utilized as a basic minimum guideline only. Refer to these written specifications and any fabrication details included in the contract drawings for precise and complete fabrication instructions.
fabctr	1		Install in place as shown on plans using stainless steel fasteners.
fabctr	1		Length, width and configuration per plan.
fabctr	1		Field verify room dimensions and adjust size as may be required.
fabctr	1		Verify and coordinate mounting height of shelves with Owner/Operator and equipment located below bottom shelf.
fabctr	1		All finished edges to be #7 mirrored polish finished.
fabctr	1		Extra long and L-shaped units to be fully factory welded, no field joints.
fabctr	1		Provide one (1) wall bracket per every three (3) feet on units over five (5) feet in overall length.
fabctr	1		NSF listed.

RJS | Associates
Integrated Food Service Design

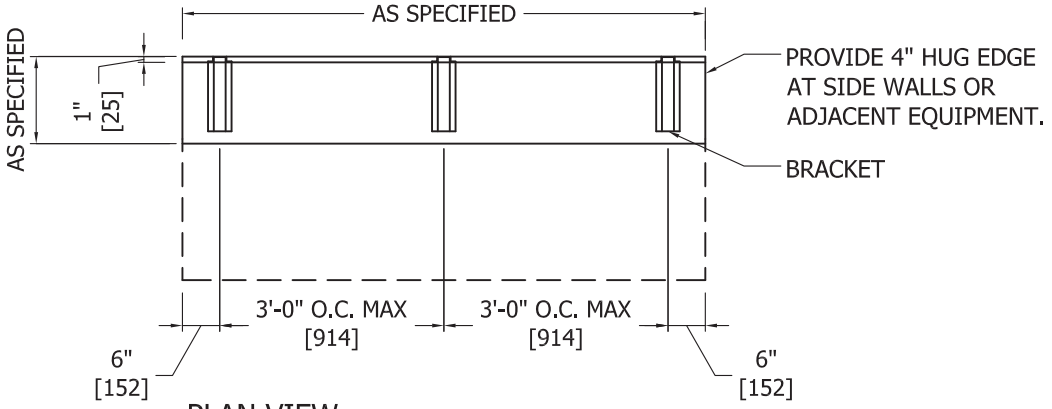

PLAN VIEW

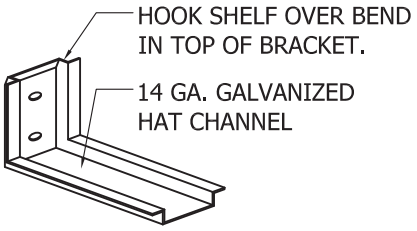

HAT CHANNEL BRACKET

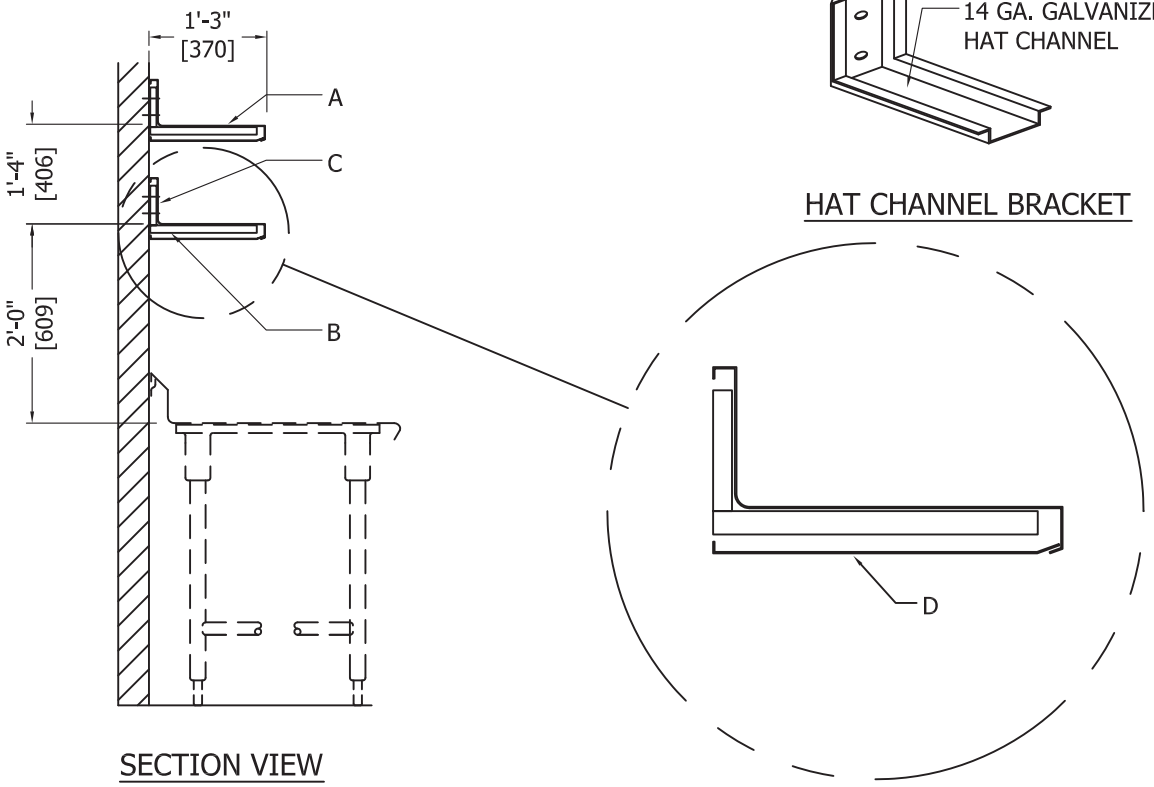

SECTION VIEW

LEGEND:

A. 16 GA. [1.5mm] STAINLESS STEEL SHELF; ALL WELDED CONSTRUCTION. SEAL AT WALL & FRONT EDGE. WITH LOCKWASHERS AND STAINLESS STEEL CAP NUTS.

B. 14 GA. [1.9mm] STAINLESS STEEL BRACKETS; ALL WELDED CONSTRUCTION.WELD BRACKETS TO SUPPORTS.

C. SECURE BRACKETS TO WALL WITH 1/4" #20 STAINLESS STEEL BOLTS ANCHORED WITH TOGGELSOR EXPANSION SHIELDS, APPROPRIATE FOR HEAVY LOADS.

D. 20 GA. [.889mm] STAINLESS STEEL REMOVABLE PANEL, SEAL AT WALL

NOTES:

1. VERIFY MOUNTING HEIGHTS WITH CLEARANCE REQUIREDFOR ANY COUNTER TOP EQUIPMENT BELOW SHELVES.
2. PROVIDE MATCHING RISERS ON ENDS AGAINST WALLS OR EQUIPMENT.

DETAIL #	DESCRIPTION:	
FD-3.1	SHELF, WALL MOUNT	
	SCALE: N.T.S.	MATERIAL: 304 STAINLESS STEEL CONSTRUCTION

RJS + ASSOCIATES
INTEGRATED FOOD SERVICE DESIGN

ITEM# 25B - HANDS FREE ELECTRONIC FAUCET (1 EA REQ'D)

T&S Brass EC-3100-120X

ChekPoint™ Electronic Faucet, deck mount, 120X rigid gooseneck, vandal resistant aerator, AC/DC control module, mixing valve, 100-240 VAC adapter

T&S BRASS AND BRONZE WORKS, INC.

2 Saddleback Cove / P.O. Box 1088
Travelers Rest, SC 29690

Travelers Rest, SC: 800-476-4103 • Simi Valley, CA: 800-423-0150 • Fax: 864-834-3518 • www.tsbrass.com

Model No.
EC-3100-120X

Item No.

This Space for Architect/Engineer Approval

Job Name_____Date_____

Model Specified_____ Quantity_____

Customer/Wholesaler_____

Contractor_____

Architect/Engineer_____

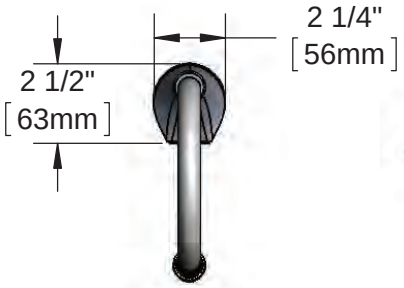

ADA Compliant

T&S ChekPoint™

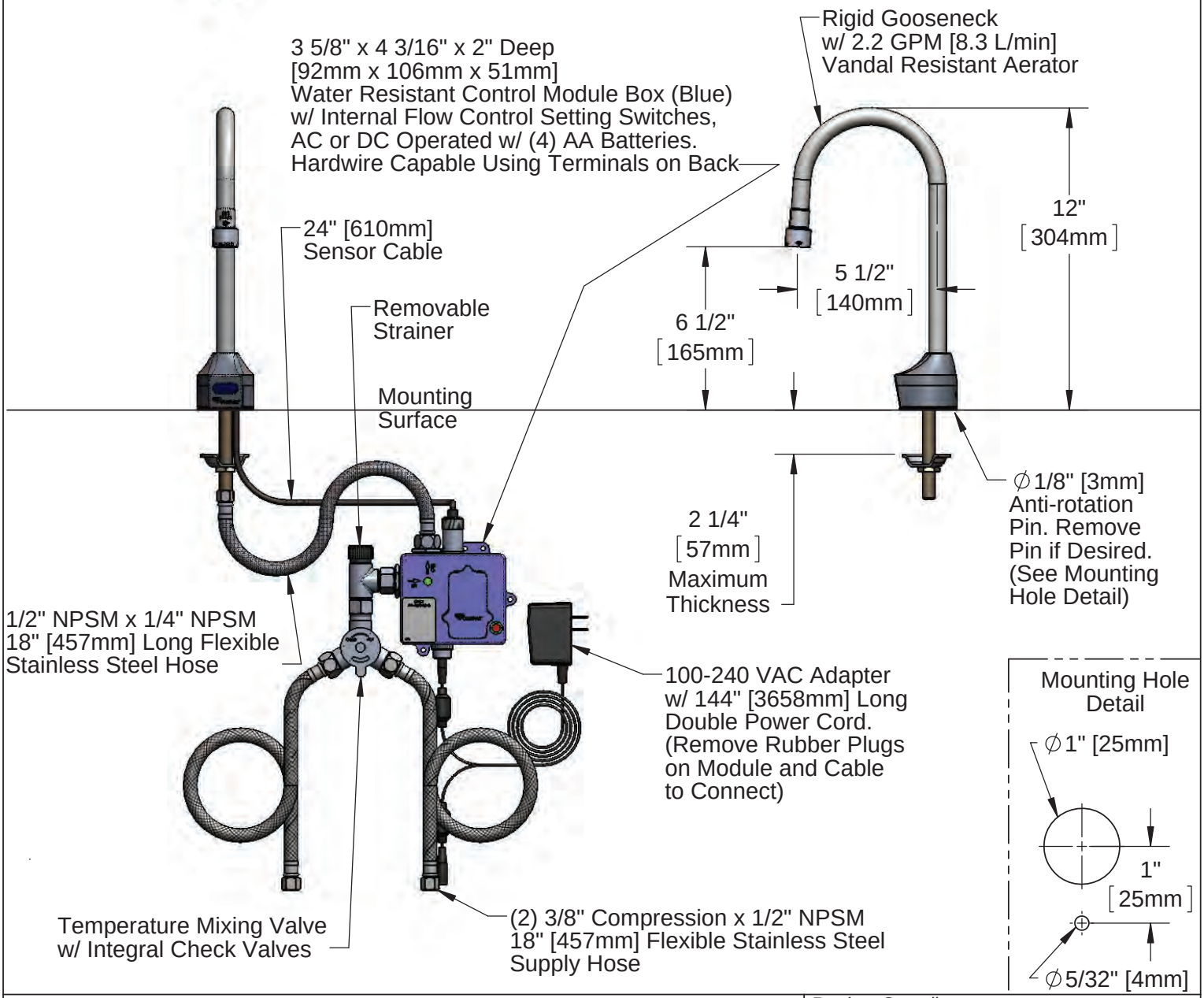

Product Specifications:

Chrome Plated Brass Electronic Faucet: Deck Mount Rigid Gooseneck w/ VR Aerator, AC/DC Control Module w/ Internal Flow Control Setting Switches, Temperature Control Mixing Valve, 18" Long Hot & Cold Supply Stop Flexible Connector Hoses

Product Compliance:

ASME A112.18.1 / CSA B125.1
NSF 61 - Section 9
NSF 372 (Low Lead Content)
ANSI A117.1 (ADA)
UL 1951

Drawn: GEF	Checked: DMH	Approved: JHB	Date: 05/07/14	Scale: 1:6	Sheet: 1 of 2

T&S BRASS AND BRONZE WORKS, INC.

2 Saddleback Cove / P.O. Box 1088
Travelers Rest, SC 29690

Travelers Rest, SC: 800-476-4103 • Simi Valley, CA: 800-423-0150 • Fax: 864-834-3518 • www.tsbrass.com

Model No.
EC-3100-120X

Item No.

ITEM NO.	SALES NUMBER	DESCRIPTION
1	B-0199-06	VR Aerator w/ Key
2	044A	3/8" to Aerator Adapter
3	006575-45	O-Ring
4	017195-45	Angled Sensor w/ Cable
5	016297-45	Inlet Hose, Faucet, 1/2" NPSM-F x 1/4" NPSM-F
6	5EF-0006	Mechanical Mixing Valve
7	5EF-0005	Supply Hose, 9/16-24 Female x 1/2" NPSM
8	015425-45	Vandal Resistant Key
9	016647-45	ChekPoint Module (Blue)
10	5EF-0002	A/C Transformer
11	EC-FILTER	Replacement Filter

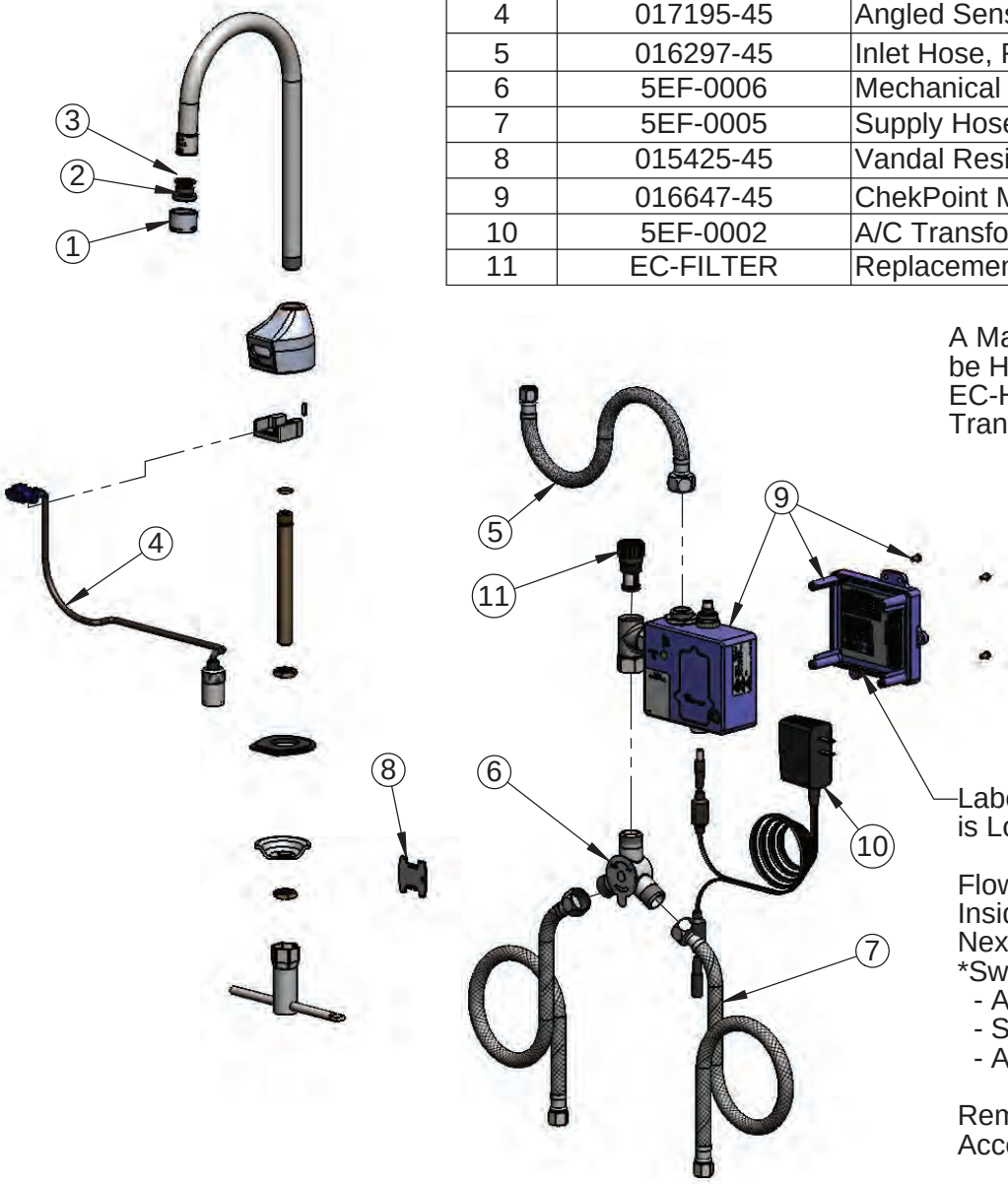

A Maximum of (8) ChekPoint Faucets can be Hardwire Connected and Powered by EC-HARDWIRE ChekPoint Hardwire AC Transformer. (Sold Separately)

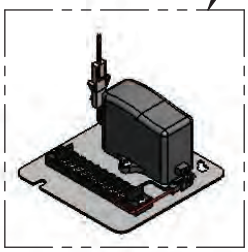

Label for Flow Control Switch Settings is Located on Inside of Back Cover.

Flow Control Switches are Located Inside Module Housing in Black Box Next to Battery Compartment.
*Switches are Set to DEFAULT Position:
- Auto Time Out = 15 Seconds
- Shut Off Delay = 1 Second
- Auto Flush = OFF

Remove (4) Screws and Back Cover to Access Switches.

*Available Water Flow Control Selections:
- Auto Time Out: 15 sec, 30 sec, 45 sec, 60 sec, 3 min, 20 min
- Shut Off Delay: 1 sec, 10 sec, 15 sec, 30 sec
- Auto Flush (30 Seconds After Every 12 Inactive Hours): ON or OFF

Product Specifications:

Chrome Plated Brass Electronic Faucet: Deck Mount Rigid Gooseneck w/ VR Aerator, AC/DC Control Module w/ Internal Flow Control Setting Switches, Temperature Control Mixing Valve, 18" Long Hot & Cold Supply Stop Flexible Connector Hoses

Product Compliance:

ASME A112.18.1 / CSA B125.1
NSF 61 - Section 9
NSF 372 (Low Lead Content)
ANSI A117.1 (ADA)
UL 1951

Drawn: GEF	Checked: DMH	Approved: JHB	Date: 05/07/14	Scale: NTS	Sheet: 2 of 2

RJS + ASSOCIATES
INTEGRATED FOOD SERVICE DESIGN

ITEM# 25C - PAPER TOWEL DISPENSER (1 EA REQ'D)
ByVen BY VENDOR
PAPER TOWEL DISPENSER
<By Vendor>

RJS + ASSOCIATES
INTEGRATED FOOD SERVICE DESIGN

ITEM# 25D - SOAP DISPENSER (1 EA REQ'D)
ByVen BY VENDOR
SOAP DISPENSER
<By Vendor>

RJS + ASSOCIATES
INTEGRATED FOOD SERVICE DESIGN

ITEM# 25E - WASTE BASKET (1 EA REQ'D)

Rubbermaid FG254300BLA

Waste Basket, 28 quart, 14-1/2"W x 10-1/2"D x 15-5/16"H, fire resistant, rounded corners, textured finish, fiberglass, black, CSFM & UL approved, S.O.S. (Special Order Smallwares) product; see SOS document for details (CAN BREAK CASE - INDICATE ON PO)

<By Vendor>

RJS + ASSOCIATES
INTEGRATED FOOD SERVICE DESIGN

ITEM# 26 - WORK CABINET W/HAND SINK AND PASS-THRU SHELF (1 EA REQ'D)

fabctr STAINLESS STEEL

See plans for location and placement of item with reference to adjoining equipment.

ACCESSORIES

Mfr	Qty	Model	Spec
fabctr	1		Similar to standard details FD-1.1A, FD-1.2A, FD-1.4, FD-1.5a, FD-1.8, FD-4.4 and FD-4.5. These standard details are to be utilized as basic minimum guidelines only. Refer to these written specifications and any fabrication details included in the contract drawings for precise and complete fabrication instructions.
fabctr	1		Provide (1) 14" wide x 14" wide x 10" deep sink bowls as located on plan.
fabctr	1		Provide (1) Pass-Thru Shelf as located on plan.

RJS + ASSOCIATES
INTEGRATED FOOD SERVICE DESIGN

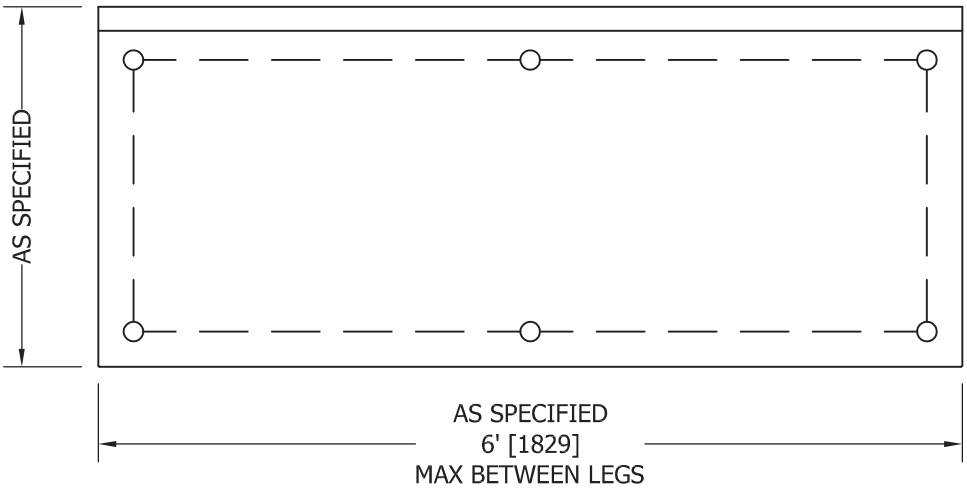

PLAN VIEW

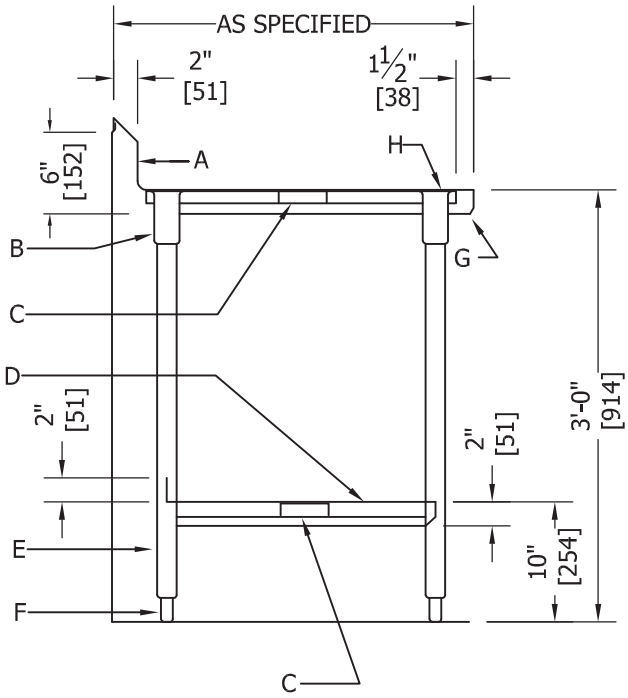

SECTION VIEW

LEGEND:
A. BACKSPLASH DETAIL AS SPECIFIED
B. STAINLESS STEEL GUSSET
C. CHANNEL REINFORCING
D. UNDERSHELF (SEE DETAIL FD-1.8)
E. 1-5/8" ϕ x 16 GA. [1.5mm] LEGS & CROSSRAILS
F. ADJUSTABLE FEET (DETAIL FD-1.4)
G. EDGE DETAIL AS SPECIFIED
H. 14 GA. [1.8mm] STAINLESS STEEL TOP

NOTES:
1. MATERIAL TO BE 14 GA. [1.8mm] STAINLESS STEEL
2. ENTIRE UNIT TO BE ALL WELDED COVE CORNERED CONSTRUCTION WITH VERTICAL AND HORIZONTAL AND INTERIOR CORNERS HAVING A 3/4" [20mm] RADIUS.

DETAIL #	DESCRIPTION:	
FD-4.4	WORK TABLE W/ UNDERSHELF	
	SCALE: 3/4" = 1'-0"	MATERIAL: 304 STAINLESS STEEL CONSTRUCTION

RJS + ASSOCIATES
INTEGRATED FOOD SERVICE DESIGN

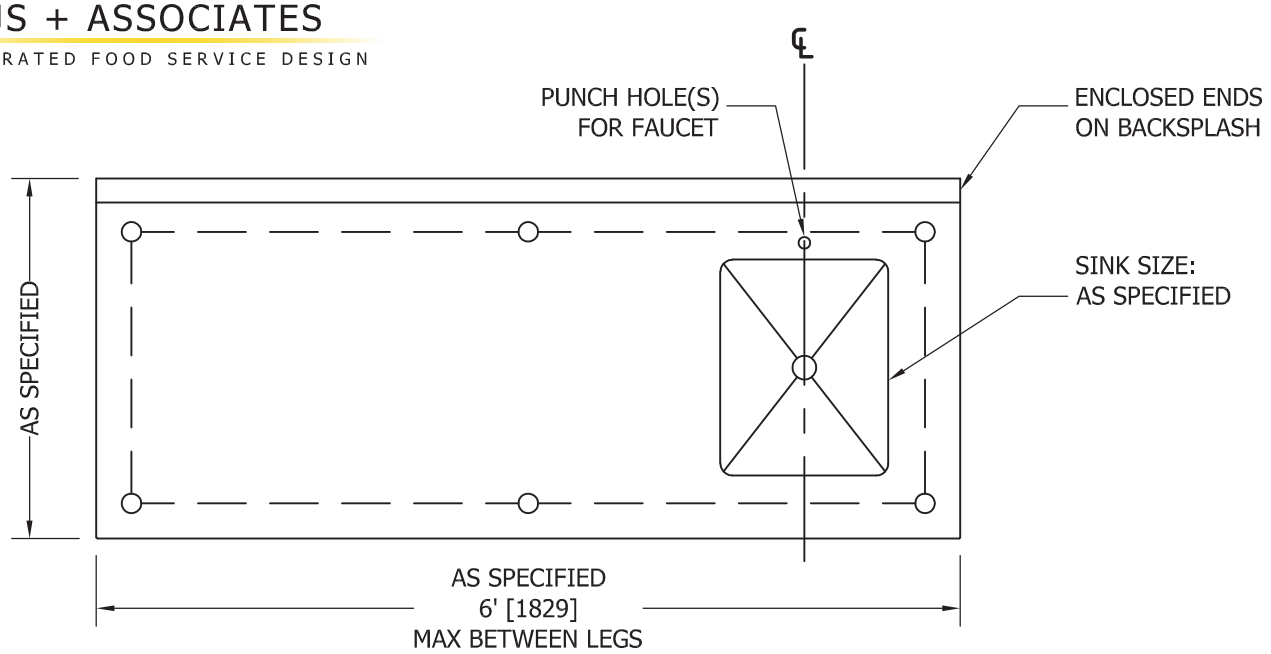

PLAN

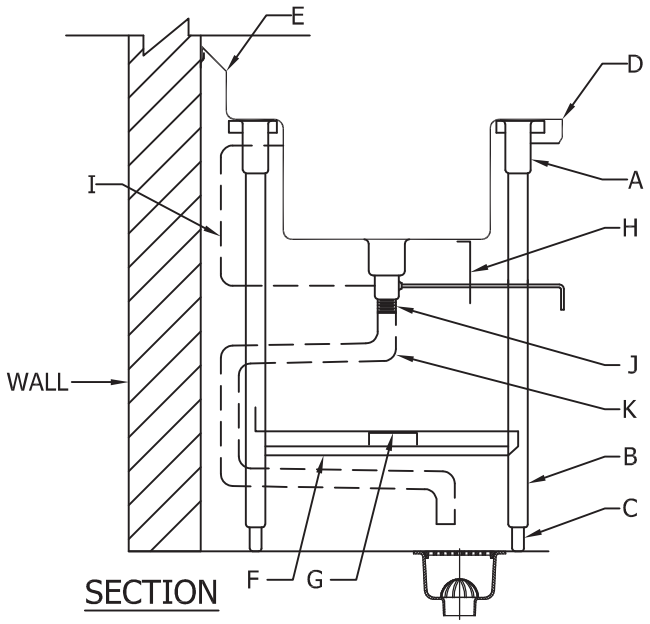

SECTION

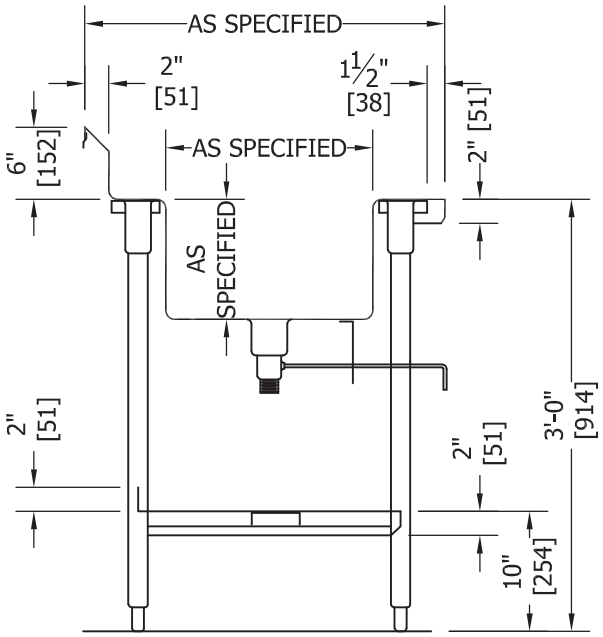

SECTION

LEGEND:
A. STAINLESS STEEL GUSSET
B. 1-5/8" ϕ X 16 GA. [1.5mm] LEGS AND CROSSRAILS
C. ADJUSTABLE FEET (SEE DETAIL FD-1.4)
D. EDGE DETAIL AS SPECIFIED
E. BACKSPLASH DETAIL AS SPECIFIED
F. 16 GA. [1.5mm] S/S UNDERSHELF (SEE DETAIL FD-1.8)
G. CHANNEL REINFORCING
H. WASTE LEVER BRACKET (SEE DETAIL FD-1.15)
I. OVERFLOW AS REQUIRED
J. DRAIN SIZE AS SPECIFIED
K. RECOMMENDED DRAIN LINE INSTALLATION

NOTES:
1. MATERIAL TO BE 14 GA. [1.9mm] STAINLESS STEEL
2. ENTIRE UNIT TO BE ALL WELDED COVE CORNERED CONSTRUCTION WITH VERTICAL AND HORIZONTAL AND INTERIOR CORNERS HAVING A 3/4" [20mm] RADIUS.
3. ENTIRE SINK COMPARTMENT TO BE PITCHED AND CREASED TO WASTE TO ASSURE COMPLETE DRAINING WITHOUT POOLING.

DETAIL #	DESCRIPTION:	
FD-4.5	WORK TABLE W/ SINK & UNDERSHELF	
	SCALE: 3/4" = 1'-0"	MATERIAL: 304 STAINLESS STEEL CONSTRUCTION

RJS + ASSOCIATES
INTEGRATED FOOD SERVICE DESIGN

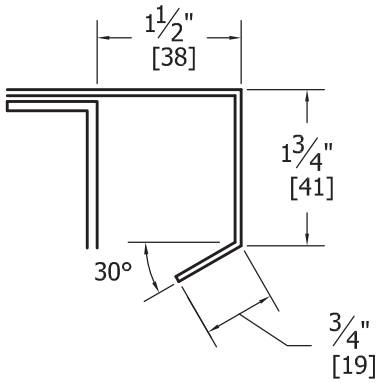

A TURN-DOWN

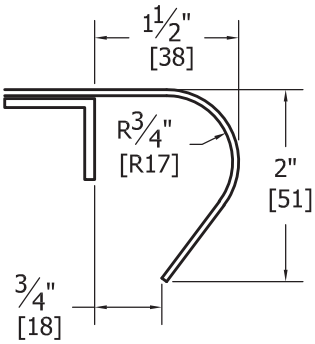

B BULLNOSE

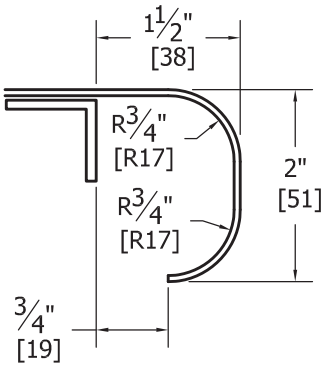

C ROLLED FLAT

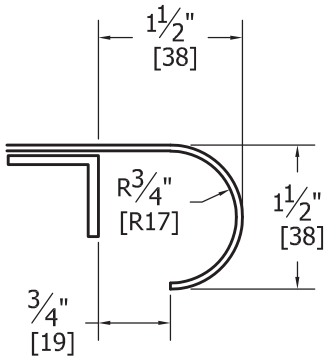

D ROLLED

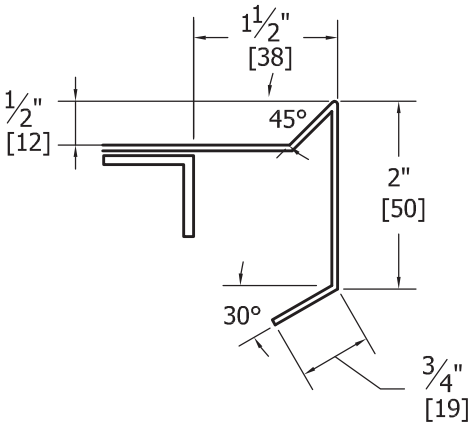

E DIE-CRIMPED

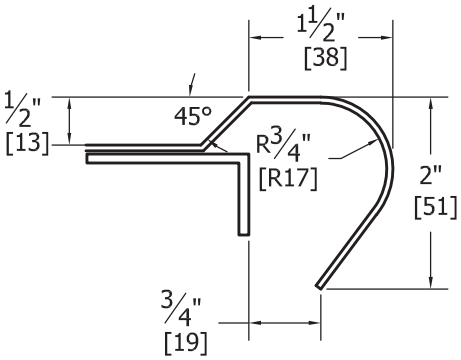

F MARINE-BULLNOSED

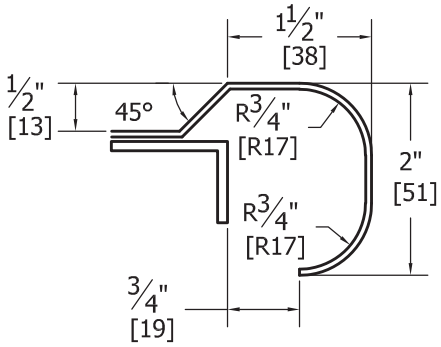

G MARINE-ROLLED FLAT

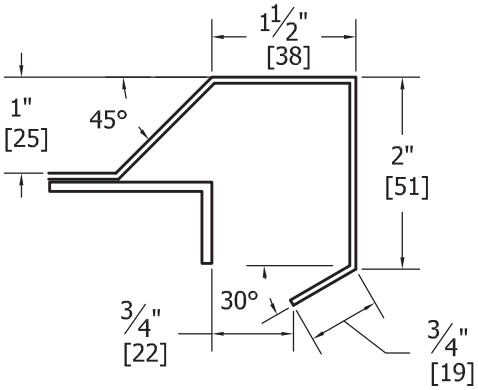

H MARINE

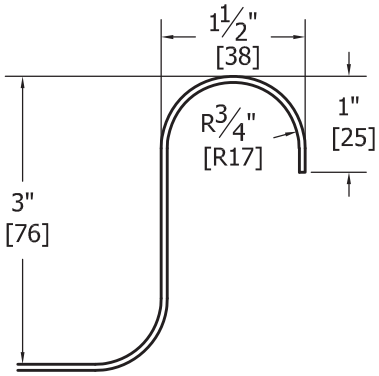

I RAISED ROLLED

DETAIL #	DESCRIPTION:	
FD-1.1	EDGES	
	SCALE: 6" = 1'-0"	MATERIAL: 304 STAINLESS STEEL CONSTRUCTION

RJS + ASSOCIATES
INTEGRATED FOOD SERVICE DESIGN

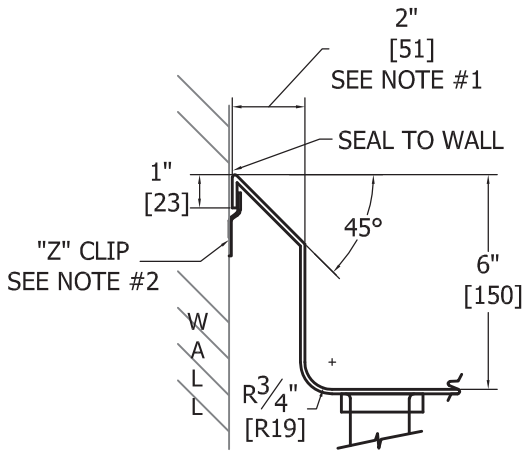

A STANDARD

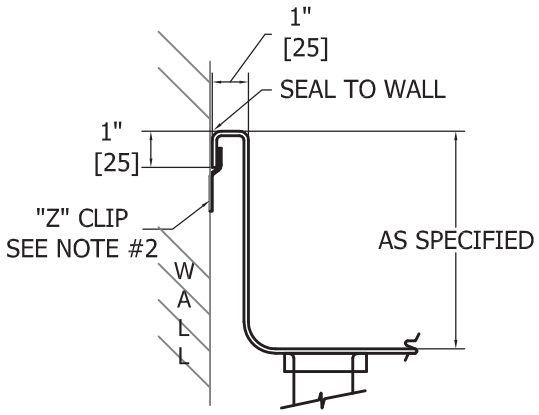

B SQUARE TURNBACK

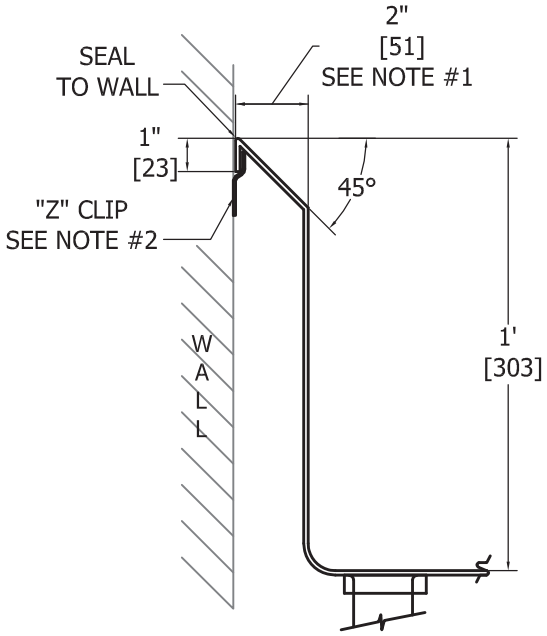

C STANDARD-INTERMEDIATE

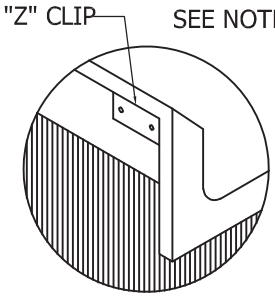

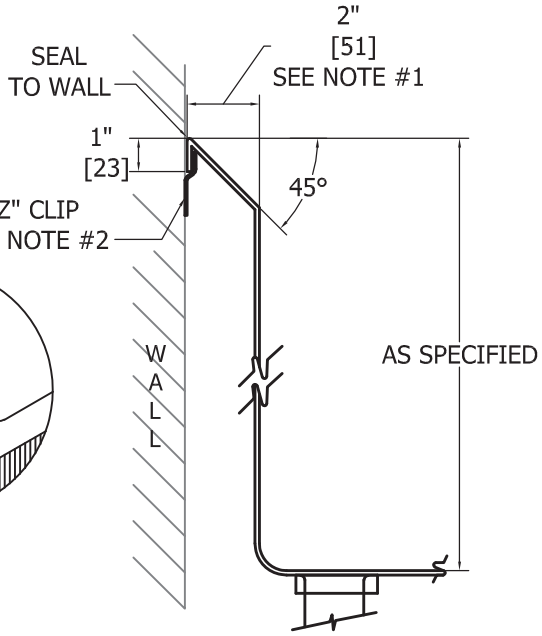

D STANDARD-EXTENDED

NOTES:

1. DEPTH INCREASED TO 2-1/2" [65mm] AT SINKS TO ALLOW FOR CONNECTED OVERFLOW.
2. 12 GA [2.7mm] S/S CLIP, 4" [100mm] LONG, FASTENED TO WALL AT EACH END OF UNIT AND 4'-0" [1200mm] O.C. SECURE TO WALL WITH A MINIMUM OF TWO. USE 1/4" [5mm] x 20 S/S BOLTS WITH TOGGLES OR EXPANSION SHIELDS.
3. EXPOSED ENDS TO BE ENCLOSED AND FULLY WELDED.
4. SEAL TO WALL ALL AROUND.

DETAIL #	DESCRIPTION:	
FD-1.2	SPLASHES	
	SCALE: N.T.S.	MATERIAL: 304 STAINLESS STEEL CONSTRUCTION

RJS + ASSOCIATES
INTEGRATED FOOD SERVICE DESIGN

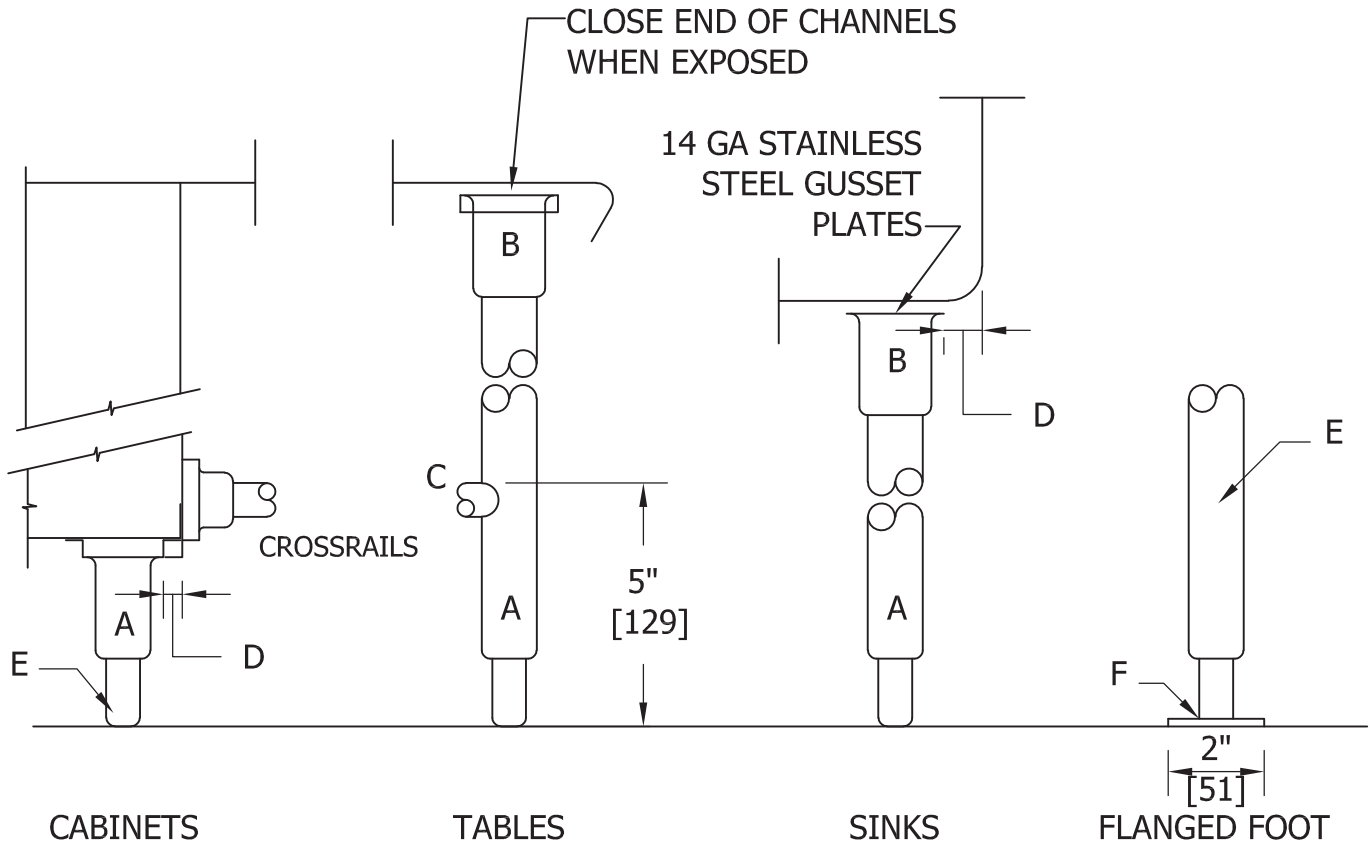

LEGEND:

A. LEGS TO BE 1⅝" O.D. 16 GA. [1.5mm] STAINLESS STEEL ASSEMBLY WITH BULLET FEET.
B. GUSSETS TO BE STAINLESS STEEL WITH SET SCREWS FOR SECURING LEGS.
FULLY WELD GRIND , SMOOTH AND POLISH GUSSETS TO CHANNELS OR GUSSET PLATES.
C. CROSSRAILS TO BE 1⅝" O.D. 16 GA. [1.5mm] STAINLESS STEEL TUBING FULLY WELDED TO LEGS. WHERE CROSSRAILS JOIN CABINET BODY, PROVIDE FLANGE SECURED WITH STAINLESS STEEL SCREWS.
D. 3/4" [20mm] MINIMUM CLEARANCE ALL AROUND.
E. FOOT SET AT MIDPOINT TO ALLOW 1"[25mm] ADJUSTMENT UP AND 1" [25mm] DOWN. WITHOUT THREAD EXPOSURE.
F. FLANGE FOOT TO FLOOR WITH COUNTERSUNK S/S BOLTS.

NOTE:
ENTIRE FINISHED STRUCTURE AND COMPONENTS TO MEET NSF REQUIREMENTS
MAINTAIN 6" [150mm] MINIMUM CLEARANCE BETWEEN FINISHED STRUCTURE & FLOOR.

DETAIL #	DESCRIPTION:	
FD-1.4	LEGS AND CROSSBRACING	
	SCALE: 3" = 1'-0"	MATERIAL: 304 STAINLESS STEEL CONSTRUCTION

RJS + ASSOCIATES
INTEGRATED FOOD SERVICE DESIGN

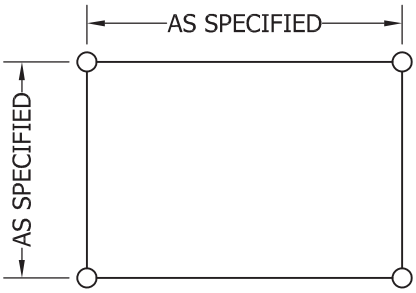

PLAN VIEW

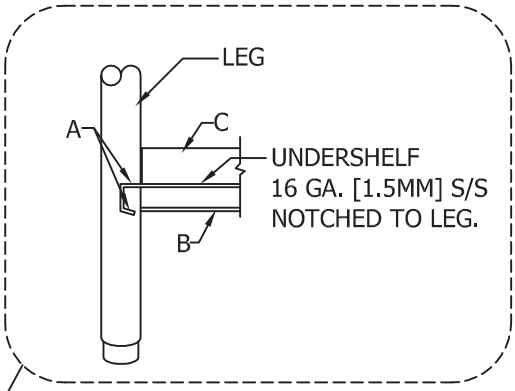

UNDERSHELF DETAIL

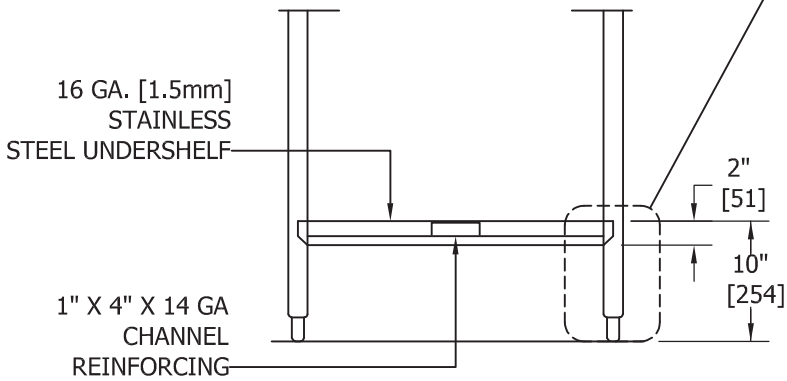

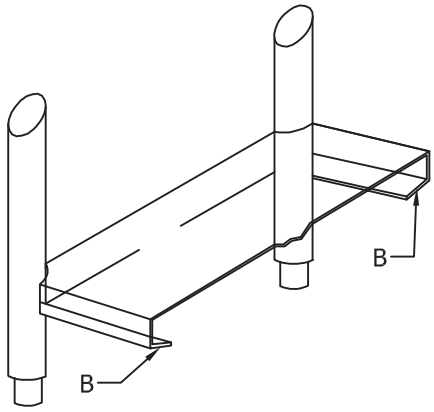

TYPICAL ISLAND APPLICATION

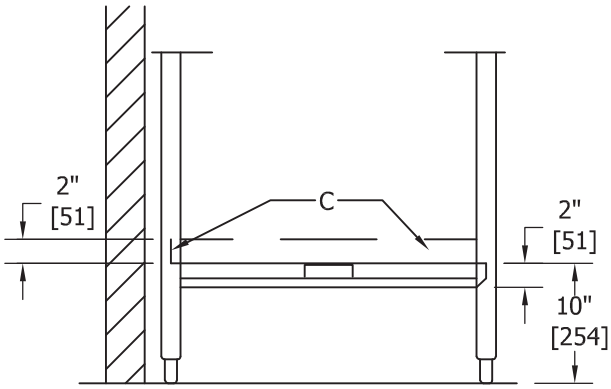

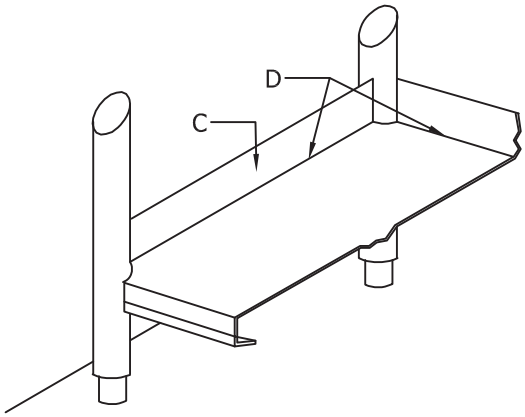

TYPICAL WALL APPLICATION

LEGEND:
A. FULLY WELD, GRIND, SMOOTH AND POLISH, WHEREVER SHELF INTERSECTS LEGS.
B. ISLAND TABLES, TURN DOWN ALL SIDES UNLESS OTHERWISE SPECIFIED.
C. TABLES AGAINST WALLS OR EQUIPMENT, TURN REAR AND ENDS AND SIDES UP 2" [50mm] UNLESS OTHERWISE SPECIFIED.
D. COVED BEND ACCEPTABLE, BUT NOT REQUIRED.

DETAIL #	DESCRIPTION:	
FD-1.8	UNDERSHELF	
	SCALE: 3/4" = 1'-0"	MATERIAL: 304 STAINLESS STEEL CONSTRUCTION

RJS + ASSOCIATES
INTEGRATED FOOD SERVICE DESIGN

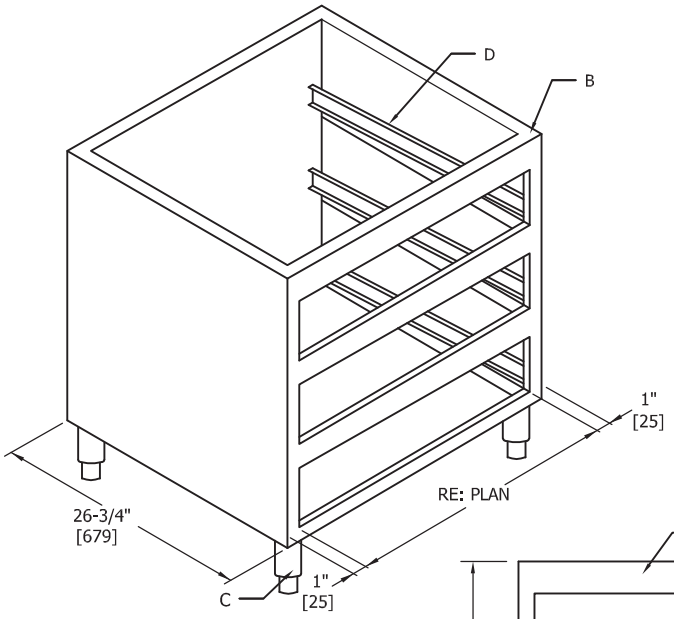

ISOMETRIC

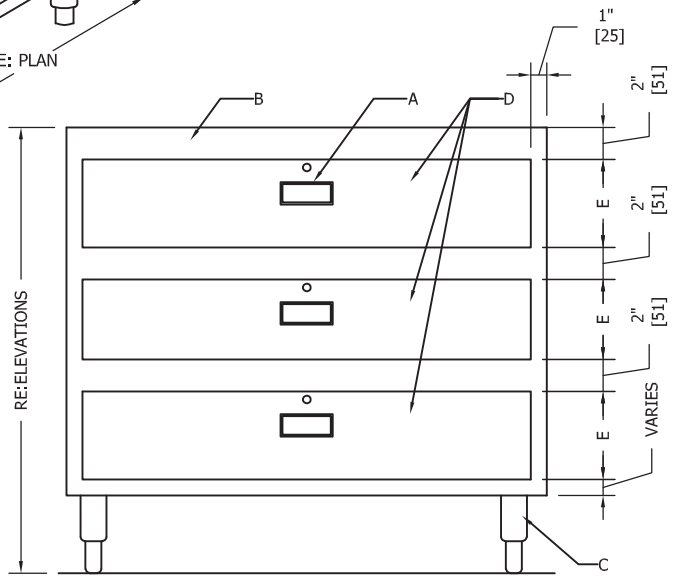

ELEVATION
THREE TIER

LEGEND:
A. RECESSED LOCK AND PULL OR AS SPECIFIED
B. 18 GA. [1.2mm] S/S HOUSING
C. ADJUSTABLE FEET
D. 18 GA. [1.2mm] DRAWERS W/ HEAVY DUTY GLIDES OR AS SPECIFIED
E. DRAWER SIZE VARIES DEPENDING ON QUANTITY

DETAIL #	DESCRIPTION:	
FD-1.5a	DRAWER ASSEMBLY	
	SCALE: 1" = 1'-0"	MATERIAL: 304 STAINLESS STEEL CONSTRUCTION

RJS + ASSOCIATES
INTEGRATED FOOD SERVICE DESIGN

ITEM# 27 - MOBILE HEATED CABINET (1 EA REQ'D)

Hatco FSHC-7-1

Flav-R-Savor® Holding Cabinet, Mobile Heated, thermostatically-controlled heat, electrical components, water reservoir, insulated, (1) door, digital temperature readout, adjustable humidity & temperature, (7) adjustable removable slides for 18" x 26" or 12" x 20" pans, slides on 1-1/2" centers, large swivel casters with wheel locks, 1697 watts, NSF, CE, cULus, Made in USA

ACCESSORIES

Mfr	Qty	Model	Spec
Hatco	1		NOTE: Sale of this product must comply with Hatco's Minimum Resale Price Policy; consult order acknowledgement for details
Hatco	1		NOTE: Includes 24/7 parts & service assistance, call 800-558-0607
Hatco	1		One year on-site parts & labor warranty, plus one additional year parts only warranty on all Flav-R-Savor® metal sheathed air heating elements
Hatco	1		120v/60/1-ph, 1697 watts, 14.1 amps, NEMA 5-15P (domestic voltage), standard
Hatco	1	SILVER	Silver gray side panels (available at time of purchase only)
Hatco	1	SILVER	Silver gray top (available at time of purchase only)
Hatco	1	LPCAST	Casters, low profile in lieu of standard casters (for 32-3/4" H) (available at time of purchase only)

Project _____

Item # _____

Quantity _____

Flav-R-Savor®
Portable Holding Cabinets

Models: FSHC-6W1, -6W2
FSHC-7-1, -7-2

The Hatco Flav-R-Savor® Portable Holding Cabinet is capable of holding all types of hot foods at optimum serving temperatures. Thermostatically-controlled heat and humidity allow you to prepare food in advance of peak periods and hold it for hours. Perfect for schools, hospitals, concessions and cafeterias where backup food storage is needed.

FSHC-6W2 with accessory food pans

Two FSHC-7-1 with stacking kit and accessory food pans

Standard features

- FSHC-6W1 and -6W2 units are small enough to fit under normal kitchen counters when ordered with low profile casters
- Tray slides hold food pans on 3" (76 mm) centers or 1.5" (38 mm) centers, and can be removed easily for cleaning
- Accommodates Gastronorm pans
- FSHC-6W1 and -6W2 units have six sets of adjustable angle slides standard (pans not included)
- FSHC-7-1 and -7-2 units have seven sets of adjustable angle slides standard (pans not included)
- Adjustable humidity and temperature controls, digital temperature readout, insulated side walls, field reversible glass doors, large swivel casters with wheel locks, adjustable angle slides and 6' (1829 mm) recessed cord and plug are standard

Pan Capacity

Models FSHC-6W1 and -6W2 include six 18" W x 26" D (457 x 660 mm) sheet pans or six 2/1 Gastronorm pans on 3" (76 mm) centers, eleven 18" W x 26" D (457 x 660 mm) sheet pans¤, eleven 2/1 Gastronorm pans on 1.5" (38 mm) centers¤, or twelve 20" W x 12" D x 2.5" H (508 x 305 x 64 mm) hotel pans¤.

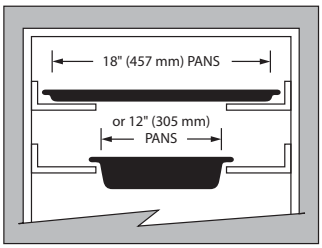

Models FSHC-7-1 and -7-2 include seven 18"W x 26"D (457 x 660 mm) sheet pans on 3" (76 mm) centers, fourteen 18"W x 26"D (457 x 660 mm) sheet pans, on 1.5" (38 mm) centers¤, or seven 20"W x 12"D x 2.5"H (508 x 305 x 64 mm) hotel pans, or seven 1/1 Gastronorm pans.

¤ With purchase of extra pan slides

WATER QUALITY REQUIREMENTS
Water supply in excess of 3.0 grains of hardness per gallon (GPG) (.75 grains of hardness per liter) must be treated and softened before being used. Water containing over 3.0 GPG (.75 GPL) will decrease the efficiency and reduce the operating life of the unit.
Note: Product failure caused by liming or sediment buildup is not covered under warranty.

Options (available at time of purchase only)

☐ Side Panels – Non-standard colors are non-returnable – Silver Gray standard
☐ *Designer* Black ☐ Stainless Steel

☐ Top – Non-standard colors are non-returnable – Silver Gray standard
☐ *Designer* Black ☐ Stainless Steel

☐ Stainless Steel Door in lieu of glass door

☐ Heavy-duty Stainless Steel Door with Positive Latch Handle

☐ Audible Low-Water Alarm (FSHC-7-1, -7-2 models only)

☐ 2" (51 mm) Low Profile Locking Casters in lieu of Standard Casters (2" [51 mm] diameter with 3" [76 mm] clearance)

☐ 4" (102 mm) Adjustable Legs in lieu of Standard Casters (FSHC-7-1, -7-2 models only)

☐ 6" (152 mm) Stainless Steel Legs in lieu of Standard Casters (FSHC-7-1, -7-2 models only)

☐ Stacking hardware mounted to top of cabinet for two units in lieu of casters – Silver Gray standard

☐ Bracket for Holding Cord During Transport

Accessories

☐ Extra Pan Slides

☐ Wire Shelf (FSHC-7-1, -7-2 models only)

IFS anti-microbial coatings use naturally-occurring, environmentally sustainable, silver ions to help inhibit the growth of microbes on the powder coated surface. See www.hatcocorp.com/antimicrobial-paint for more information.

For operation, location and safety information, please refer to the Installation and Operating Manual.

MADE IN THE USA

HATCO CORPORATION | P.O. Box 340500 Milwaukee, WI 53234-0500 U.S.A. | (800) 558-0607 | (414) 671-6350

www.hatcocorp.com | support@hatcocorp.com | Find a Hatco Rep | Image Library | Document Library | Chat

Flav-R-Savor® Portable Holding Cabinets

Models: FSHC-6W1, -6W2 FSHC-7-1, -7-2

FSHC-6W1, -6W2

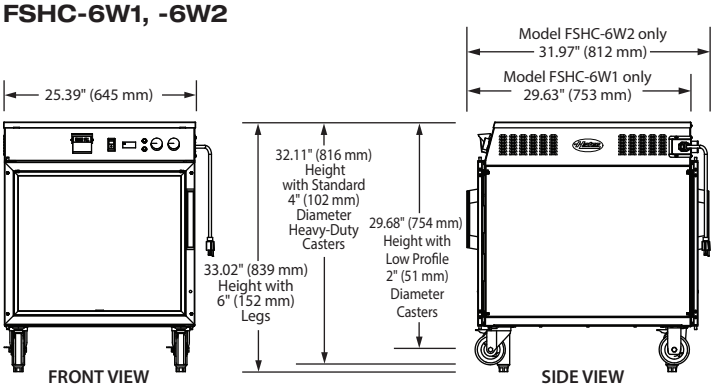

FSHC-7-1, -7-2

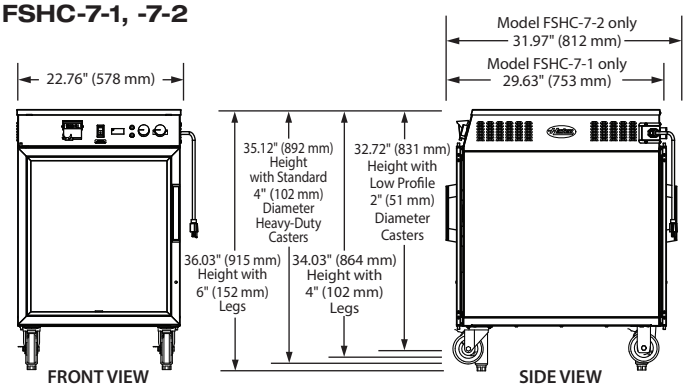

SPECIFICATIONS
Portable Holding Cabinets - Humidified

The shaded areas contain electrical information for International models

Model	Description	Dimensions (W x D x H)	Cabinet Opening (W x H)	Volts	Hertz	Watts	Amps	Plug	Ship Weight*
FSHC-6W1	Single Door with 6 Adjustable Angle Slides	25.39" x 29.63" x 32.11" (645 x 753 x 816 mm) on 4" (102 mm) casters	21.5" x 19" (546 x 482 mm)	120	60	1697	14.1	NEMA 5-15P▲	167 lbs. (76 kg)
				220	50	1697	7.7	CEE 7/7 Schuko	167 lbs. (76 kg)
				240	50	1697	7.1	BS-1363 or AS 3112	
				220-230 (CE)	50	1697-1850	7.7-8	CEE 7/7 Schuko	
				230-240 (CE)	50	1562-1697	6.8-7.1	BS-1363	
FSHC-6W2✚	Two Doors with 6 Adjustable Angle Slides	25.39" x 31.97" x 32.11" (645 x 812 x 816 mm) on 4" (102 mm) casters	21.5" x 19" (546 x 482 mm)	120	60	1697	14.1	NEMA 5-15P▲	180 lbs. (82 kg)
				220	50	1697	7.7	CEE 7/7 Schuko	180 lbs. (82 kg)
				240	50	1697	7.1	BS-1363 or AS 3112	
				220-230 (CE)	50	1697-1850	7.7-8	CEE 7/7 Schuko	
				230-240 (CE)	50	1562-1697	6.8-7.1	BS-1363	
FSHC-7-1	Single Door with 7 Adjustable Angle Slides	22.76" x 29.63" x 35.12" (578 x 753 x 892 mm) on 4" (102 mm) casters	18.5" x 22" (469 x 558 mm)	120	60	1697	14.1	NEMA 5-15P▲	175 lbs. (80 kg)
				220	50	1697	7.7	CEE 7/7 Schuko	175 lbs. (80 kg)
				240	50	1697	7.1	BS-1363 or AS 3112	
				220-230 (CE)	50	1697-1850	7.7-8	CEE 7/7 Schuko	
				230-240 (CE)	50	1562-1697	6.8-7.1	BS-1363	
FSHC-7-2✚	Two Door with 7 Adjustable Angle Slides	22.76" x 31.97" x 35.12" (578 x 812 x 892 mm) on 4" (102 mm) casters	18.5" x 22" (469 x 558 mm)	120	60	1697	14.1	NEMA 5-15P▲	180 lbs. (82 kg)
				220	50	1697	7.7	CEE 7/7 Schuko	180 lbs. (82 kg)
				240	50	1697	7.1	BS-1363 or AS 3112	
				220-230 (CE)	50	1697-1850	7.7-8	CEE 7/7 Schuko	
				230-240 (CE)	50	1562-1697	6.8-7.1	BS-1363	

* Shipping weight includes packaging.
▲ Canada, use NEMA 5-20P.
✚ Two-door pass-though single cabinet, not two units stacked.

WATER CAPACITY
¾ gallon (2.8 liters).

CORD LOCATION
Back of unit, top right side.

TOP SURFACE DIMENSIONS
FSHC-6W1, -6W2: 25.39"W x 25.87"D (645 x 657 mm).
FSHC-7-1, -7-2: 22.64"W x 25.87"D (575 x 657 mm).

PLUG CONFIGURATIONS

NEMA 5-15P

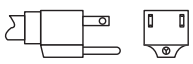

NEMA 5-20P

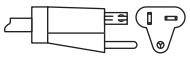

CEE 7/7 Schuko

BS-1363

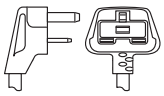

AS 3112

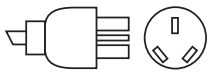

PRODUCT SPECS
Humidified Portable Holding Cabinets

The humidity-controlled heated Portable Holding Cabinet shall be a Flav-R-Savor® Model ... , rated at ... volts, and ... watts, as manufactured by the Hatco Corporation, Milwaukee, WI 53234 U.S.A.

The cabinet shall have ... door(s), tray slides (or holding rack), insulated side walls, 4" (102 mm) swivel casters with wheel locks or 4" (102 mm) legs, and a 6' (1829 mm) cord and plug. It shall include a water reservoir, humidity selector switch, temperature selector dial, On/Off switch, and indicating lights.

Accessories shall include sheet pans, extra pan slides, bumper kit, and wire shelf.

Warranty consists of 24/7 parts and service assistance (US and Canada only).

HATCO CORPORATION | P.O. Box 340500 Milwaukee, WI 53234-0500 U.S.A. | (800) 558-0607 | (414) 671-6350

www.hatcocorp.com | support@hatcocorp.com | Find a Hatco Rep | Image Library | Document Library | Chat

RJS + ASSOCIATES
INTEGRATED FOOD SERVICE DESIGN

ITEM# 28 - CORNER GUARD (2 EA REQ'D)

Advance Tabco CG-48

Corner Guard, 48" long x 2" x 2", 16 gauge stainless steel, includes: adhesive tape backing

ADVANCE TABCO
SMART FABRICATION™

STAINLESS STEEL

WALL CORNER & BUMPER GUARDS

Item #: _____ Qty #: _____
Model #: _____
Project #: _____

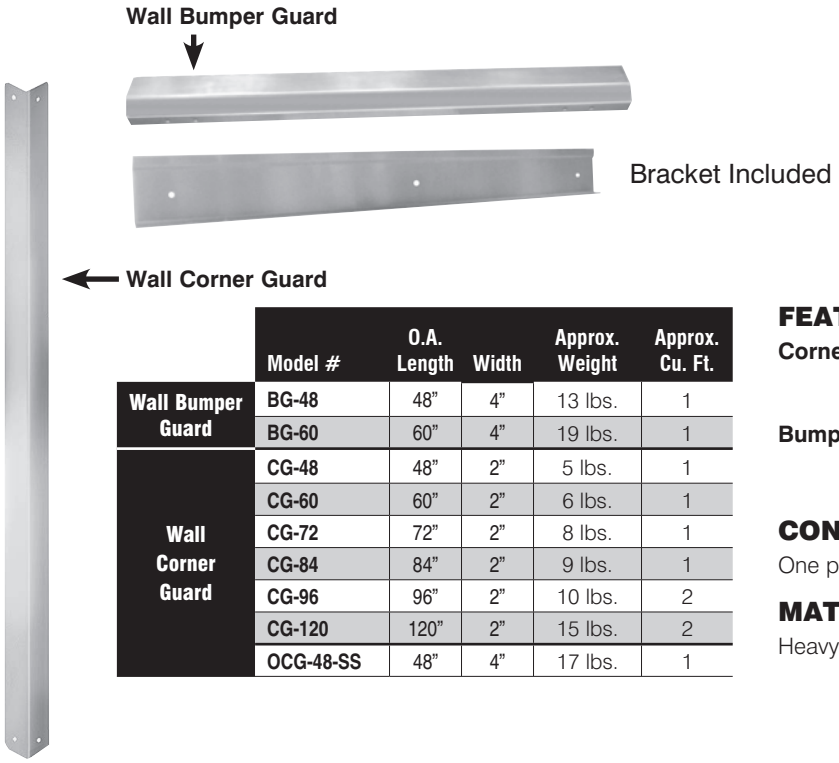

	Model #	O.A. Length	Width	Approx. Weight	Approx. Cu. Ft.
Wall Bumper Guard	BG-48	48”	4”	13 lbs.	1
	BG-60	60”	4”	19 lbs.	1
Wall Corner Guard	CG-48	48”	2”	5 lbs.	1
	CG-60	60”	2”	6 lbs.	1
	CG-72	72”	2”	8 lbs.	1
	CG-84	84”	2”	9 lbs.	1
	CG-96	96”	2”	10 lbs.	2
	CG-120	120”	2”	15 lbs.	2
	OCG-48-SS	48”	4”	17 lbs.	1

FEATURES:

Corner Guard: Stainless steel corner guards with adhesive backing and 1/4” diameter holes on each end for easy installation.

Bumper Guard: Includes mounting bracket. Mounting bracket has 1/4” diameter holes for easy installation.

CONSTRUCTION:

One piece stainless steel with 1/8” radius on all corners.

MATERIAL:

Heavy gauge “304” stainless steel.

DETAILS and SPECIFICATIONS

TOL ± .500” ALL DIMENSIONS ARE TYPICAL

CG Wall Corner Guards

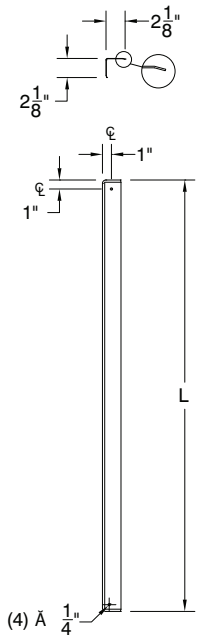

OCG Wall Corner Guard

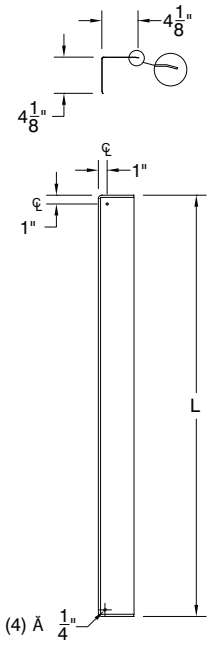

BG Wall Bumper Guards

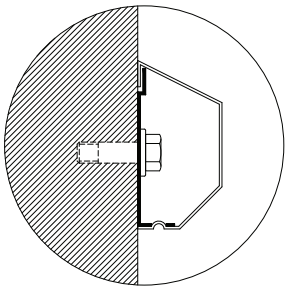

Suggested Mounting

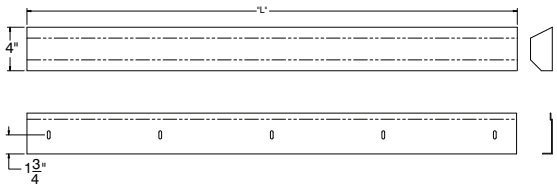

ADVANCE TABCO
SMART FABRICATION™
www.advancetabco.com

Customer Service Available To Assist You 1-800-645-3166 8:30 am - 8:00 pm E.S.T.

For Orders & Customer Service:
Email: customer@advancetabco.com or **Fax:** 631-242-6900

For Smart Fabrication™ Quotes:
Email: smartfab@advancetabco.com or **Fax:** 631-586-2933

RJS + ASSOCIATES
INTEGRATED FOOD SERVICE DESIGN

ITEM# 29 - AIR CURTAIN (1 EA REQ'D)

Mars Air Systems LPV272-1UD-OB

LoPro Series 2 Air Curtain, for 72" wide door, unheated, galvanized steel cabinet, obsidian black powder coat finish, (1) 1/6 HP motor, 208/230v/60/1-ph, cETLus

ACCESSORIES

Mfr	Qty	Model	Spec
Mars Air Systems	1		5 year warranty, standard
Mars Air Systems	1		1 year warranty for all parts (except filters), standard
Mars Air Systems	1		Mechanical switches
Mars Air Systems	1		Door Limit Switch, indoor, plunger/roller type, remote mounted
Mars Air Systems	1	99-014	Door Limit Switch, indoor, plunger/roller type, remote mounted, 1 HP max, 250v, 20.0 amps, NEMA 2
Mars Air Systems	1		Brackets
Mars Air Systems	1		Offset mounting brackets

atmosphere is everything
14716 S. Broadway • Gardena, CA 90248 • USA
TEL:(310) 532-1555 • (800) 421-1266 • FAX:(310) 324-3030
Web Site: www.marsair.com • E-mail:info@marsair.com

PROJECT		OPTIONS/ITEMS	
TITLE			
COMMENTS		DATE 8/3/16	PAGE
		REV. NO	
MODEL NO. LP2 Series	DRAWING NO LPV2U–F	DRAWN BY BH	CHECKED BY / FILE NAME

Unheated Drawing

LPV2

(LoPro2 Variable Speed)
Series

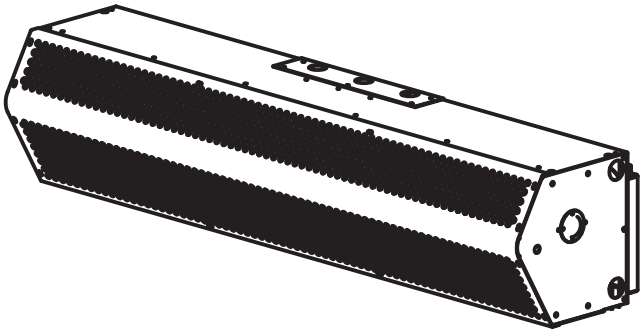

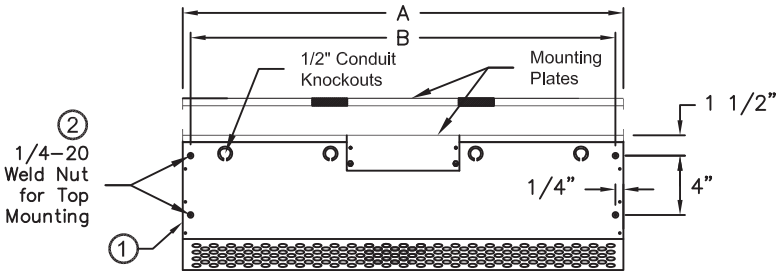

TOP VIEW

*Depth for Air Curtain wth SimpleLink option will be 11 ¾"

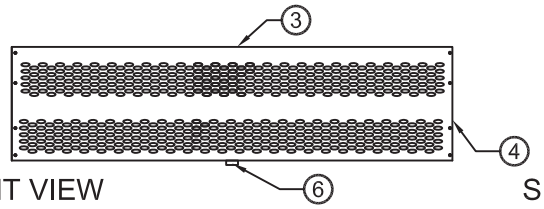

FRONT VIEW

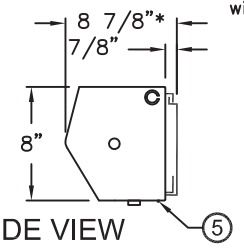

SIDE VIEW

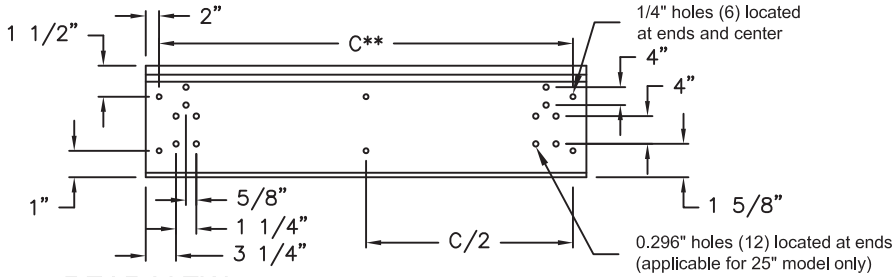

REAR VIEW

Intertek

8 Recommended Accessories

Door Limit Switches (Mechanical plunger/roller style shown)

Brackets (Offset mounting style shown)

*- Use corresponding letters in "Electrical Data" columns to complete the model numbers.

**- "C" only applies to single units up to 72" units. Dims are not applicable for units 84" and longer.

MODEL NUMBER	OVERALL LENGTH A (In)	MOUNTING LENGTH B (In)	REAR MOUNTING CENTER C (In)
LPV225-1U*-OB	25	24 1/2	21
LPV236-1U*-OB	36	35 1/2	32
LPV242-1U*-OB	42	41 1/2	38
LPV248-1U*-OB	48	47 1/2	44
LPV260-1U*-OB	60	59 1/2	56
LPV272-1U*-OB	72	71 1/2	68
LPV284-2U*-OB	86	85 1/2	N/A
LPV296-2U*-OB	98	97 1/2	N/A
LPV2108-2U*-OB	110	109 1/2	N/A
LPV2120-2U*-OB	122	121 1/2	N/A
LPV2144-2U*-OB	146	145 1/2	N/A

Notes:

1. This product is designed to meet the National Electric Code (NEC) and ETL Listed (UL 507 and CSA 22.2).
2. 1/4" mounting holes provided for wall mounting (4) and overhead mounting (4), (2) on each end. Additional 0.296" mounting holes (12) provided.
3. All units have a self contained one piece cabinet up to 72", fire retardant and corrosion proof paint lock metal double protected with baked on Obsidian Black color, rust preventative electrostatic polyurethane powder coating.
4. Cabinet has sufficient strength for fastening to wall on both ends without intermediate support. Units greater than 72" are double units joined with a 2" mounting bracket located in the center and must be center supported, field installed.
5. Unit is to be installed such that air flow is unobstructed. Air discharge nozzle containing an adjustable air directional vane with 40° sweep front to back.
6. Mounted adjustable speed controller knob allows air velocity to meet a wide range of field conditions. Units greater than 72", the speed controller will be located on the right hand unit and controls both units, field wired.
7. Circuit protection as per NEC by others.
8. Optional door limit switch and mounting brackets are field installed and/or wired by others. The door limit switch is to be mounted such that the air curtain turns on as door begins to open. To prevent unit damage, the mounting brackets must be installed such that the bottom of the air curtain is not below the door header.

LPV2 (LoPro2 Variable Speed) Series

Unheated

Model Lengths 25” – 144”

atmosphere is everything

14716 S. BROADWAY, GARDENA, CA 90248 ● Ph: (310)532-1555 Fax: (310)532-3030 ● www.marsair.com

Unheated Data Sheet

Applications: Environmental Separation (up to 8’) and Insect Control (up to 7’)

LPV2 (Low Profile Variable 2) Series 2	Mechanical Data						Lab Data	
Model Number	Nozzle Length (in)	Length (in)	Depth (in)	Height (in)	Motor (hp)	Weight (lbs)	Max Velocity (fpm)	Max Volume (cfm)
LPV225-1U*-OB	25	25	9	8	1/6	20	1800	625
LPV236-1U*-OB	36	36	9	8	1/6	32	1800	900
LPV242-1U*-OB	42	42	9	8	1/6	35	1800	1050
LPV248-1U*-OB	48	48	9	8	1/6	40	1800	1200
LPV260-1U*-OB	60	60	9	8	1/6	48	1800	1500
LPV272-1U*-OB	72	72	9	8	1/6	58	1800	1800
LPV284-2U*-OB	86	86	9	8	Two 1/6	75	1800	2100
LPV296-2U*-OB	98	98	9	8	Two 1/6	83	1800	2400
LPV2108-2U*-OB	110	110	9	8	Two 1/6	92	1800	2700
LPV2120-2U*-OB	122	122	9	8	Two 1/6	102	1800	3000
LPV2144-2U*-OB	146	146	9	8	Two 1/6	122	1800	3600

* - Use corresponding letters in "Electrical Data" columns to complete the model numbers

Note: Data above is for 60 Hz, 17% reduction in the performance data with 50 Hz.

Features:

- 1/6 HP continuous duty motors
- Sleek self-contained one-piece light gauge corrosion-resistant paint lock metal design
- ETL-certified to conform to UL 507 (US) and CSA 22.2 (Canada) standards (Indoor/Outdoor Use)
- Dynamically balanced corrosion-resistant aluminum crossflow wheels
- Very low-profile design, 8” (H) x 8 7/8” (D)
- Variable speed controller
- Wall mounting bracket removable for easy installation
- 1/4" mounting holes provided for wall mounting (4) and overhead mounting (4), 2 on each end
- Cabinet has sufficient strength for fastening to wall on both ends without intermediate support up to 72”. (Models 84” to 144” require intermediate support in the center.)
- Adjustable air directional vane with 40° sweep front to back
- Standard color is Obsidian Black
- Rust preventative electrostatic polyurethane powder coating
- 5-year parts warranty
- Freight included (FOB continental USA)
- Proudly Made in the USA

Electrical Data (FLA)	Unit Voltage (Voltage Code)	
	115v/1Ø (A)	208/230v/1Ø (D)
LPV225-1U*-OB	2.4	1.2
LPV236-1U*-OB	2.4	1.2
LPV242-1U*-OB	2.4	1.2
LPV248-1U*-OB	2.4	1.2
LPV260-1U*-OB	2.6	1.4
LPV272-1U*-OB	2.6	1.4
LPV284-2U*-OB	4.8	2.4
LPV296-2U*-OB	4.8	2.4
LPV2108-2U*-OB	5.0	2.6
LPV2120-2U*-OB	5.2	2.8
LPV2144-2U*-OB	5.2	2.8

* - Use corresponding letters in "Electrical Data" columns to complete the model numbers.

Note: for ampacity, multiply FLA X 1.25

Options and Accessories: (see Accessories Brochure)

- Door limit switches
- Wall and overhead Bracket
- Custom colors and finishes (304SS, 316SS)
- SimpleLink controller (housing depth will be 11.75” with this option)

Sound Levels: (measured at 10’ in an open field)

(25” & 36”) - 49 dBA, (42”) - 50 dBA, (48”) - 52 dBA, (60”-96”) - 53 dBA & (108”-144”) - 54dBA

EXAMPLE

LPV2 72 - 1 U D - OB

- Series: Lo Pro 2
- LENGTH OF UNIT
- # OF MOTORS
- U = UNHEATED
- VOLTAGE CODE
- COLOR

C ETL LISTED US

Intertek

NOTE: MARS AIR SYSTEMS, LLC reserves the right to change specifications and product design without notice. Such revisions do not entitle the buyer to corresponding changes, improvements, additions or replacements for previously purchased equipment.

Door Limit Switches

NEMA1 to NEMA9 Models

atmosphere is everything

14716 S. BROADWAY, GARDENA, CA 90248 ● Ph: (310)532-1555 Fax: (310)-532-3030 ● www.marsair.com

Door Limit Switches

Door Switch Number	Description	Voltage	Phase	HP	Amperage	Poles	NEMA Rating
99-013	Standard Roller Type	250V	1	1	20	1	NEMA 1
99-014	Standard Combination Plunger/Roller Type	250V	1	1	20	1	NEMA 1
99-270	Washdown Roller Type	250V	1	1	20	1	NEMA 4X
99-016	Explosion Resistant 1 Roller Type	250V	1	3/4	15	1	NEMA 7 & 9

Note: DO NOT GROUND the COM terminal. This is the common terminal and not ground or neutral. Please see the wiring instructions for the switches.

Features:

- UR (UL Recognized) and rated for NEMA 1 (field installed by others)
- Combination plunger/Roller (99-014) & Roller Type (99-013) door limit switches available to suit various applications
- Only available for 115V, 208V or 230V, 1Ø power (If any of the ratings are exceeded, an optional motor control panel must be used)
- Maximum ratings of 1 HP, 250V and 20A. See model specs
- Single pole terminal (1P) normally closed (NC) and normally opened (NO) contact. Only the NC terminals are used and provided with terminal screws
- Used when automatic control of an air curtain(s) is required
- Turns the air curtain on when the door opens and off when the door closes
- 1 year parts warranty
- Requires less than 1/8" of travel or 2 lbs. of force on the switch plunger to energize and de-energize the air curtain
- 1/2" FPT conduit connection (field wired by others)
- (2) 11/64" mounting holes provided*

*Do not use a fastener larger than a #6 sheet metal screw or a #8 Machine screw to mount this door limit switch. Forcing larger screws through the mounting holes may destroy the switch and void the warranty.

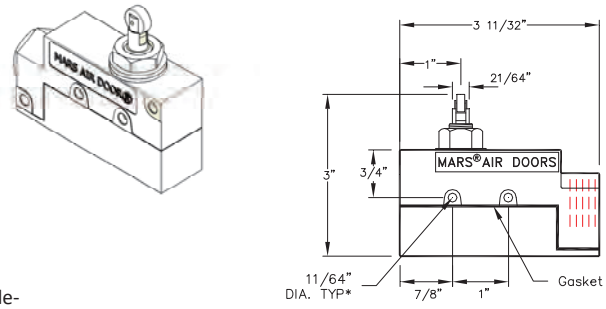

99-014 – Combination Plunger/Roller Type

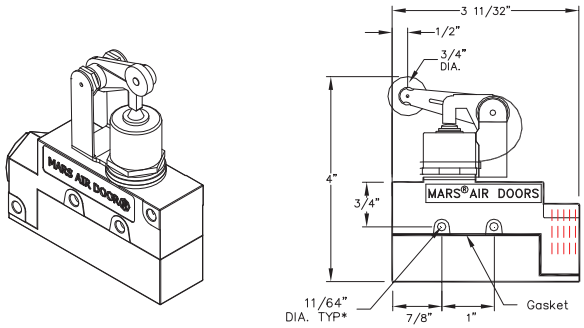

99-013 - Roller Type

Options and Accessories: (see Accessories Brochure)

Washdown

- UR (UL Recognized) and rated for NEMA4X/IP55 (field installed by others)
- Roller Type 99-270 are rated for 250V, 20A, 1 HP

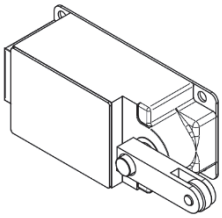

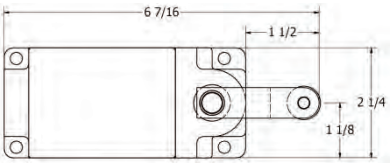

99-270 – Washdown Roller Type

Explosion Resistant

- UR (UL Recognized) and rated for NEMA 7 & 9 (Class 1, Division 1, Group D) (field installed by others)
- Roller Types 99-016 are rated for 250V, 15A, ¾ HP

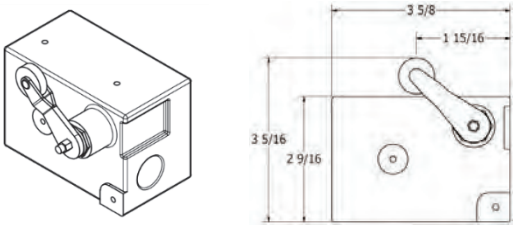

99-016 – Explosion Resistant Roller Type

RJS + ASSOCIATES
INTEGRATED FOOD SERVICE DESIGN

ITEM# 30-99 - SPARE NO.

<Spare No.>

SECTION 115000 - TECHNOLOGY EQUIPMENT

PART 1 - GENERAL

1.1 RELATED DOCUMENTS

A. Drawings and general provisions of the Contract, including General and Supplementary Conditions and Division 01 Specification Sections, apply to this Section.

1.2 SUMMARY

A. Section Includes:

1. Technology equipment consisting of

a. Video projectors.
b. Motorized projector lifts.
c. Mounting brackets.
d. Accessory equipment.

1.3 SUBMITTALS

A. Submit in accordance with Division 01 Sections.

B. Product Data: For all system materials and components specified herein.

C. Shop Drawings: Include dimensions, method of attachment, structural support, bracing, and electrical wiring.

1. Submit detailed plans and schematic wiring diagrams depicting locations and arrangement of work.

D. Installing contractor shall have extensive experience in equipment provision and data system installations and shall document so at time of equipment submittals.

1.4 CLOSEOUT SUBMITTALS

A. Include operating instructions and maintenance and repair procedures.

B. Include manufacturer representative's letter stating that system is operational.

1.5 PROJECT RECORD DOCUMENTS

A. Submit under provisions of Division 01 Sections.

B. Accurately record location and arrangement of all system components. Include data port identification numbers.

1.6 QUALITY ASSURANCE

A. Installer Qualifications: Five (5) years minimum experience with installing work of this Section.

B. Electrical Components, Devices, and Accessories: Listed and labeled as defined in NFPA 70, Article 100, by a testing agency acceptable to authorities having jurisdiction, and marked for intended use.

C. Comply with NFPA 70.

1.7 DELIVERY, STORAGE AND HANDLING

A. Deliver, store, protect, and handle Products to site under provisions of Division 01 Sections.

B. Protect components from corrosion and entrance of debris by storing above grade. Provide appropriate covering.

1.8 WARRANTIES

A. Provide manufacturer's standard warranties for all specified equipment, including on-site servicing of all defective equipment for up to one hundred eighty (180) days after installation.

B. Pay for the labor and material related to the removal, servicing or replacing of defective or faulty equipment, including paying for the shipping costs related to the off-site servicing of the equipment.

PART 2 - PRODUCTS

2.1 EQUIPMENT

A. Projector: Optoma **ZH406**, 1080p full HD resolution, DLP, 4,500 lumens.

1. Cables and Power Cord.
2. Remote Control and Operator's Guide.

B. Motorized Project Lifts: Electrically operated, tight stacking scissor type, projector lift for lowering and retracting projector from ceiling storage location to show position. Assembly to include controls, mounting hardware, wiring, and other components required for complete operation.

1. Basis-of-Design:

a. Draper, Inc.; **Micro Projector Lift (MPL)**

2. Available Manufacturers: Subject to compliance with requirements, available manufacturers that may be incorporated into the Work include, but are not limited to, the following:

a. Legrand North America, LLC (Legrand AV)
b. Substitutions: Under provisions of Section 012500 "Substitution Procedures".

3. Operating Mechanism: Three (3) sets of nylon reinforced with long glass fiber stabilizing scissors positions on sides and rear of operating plan, and two (2) 1-inch-wide Kevlar belts, raise and lower operating pan with 110-120Vac, 60 Hz, instantly reversible, thermally protected, lifetime lubricated, 3-wire motor with electric brake.

    a. Limit Switches: Provide factor set at 48 inches and field adjustable.
    b. Maximum Extension: 48 inches.
    c. Maximum Lift Capacity: 35 pounds.
    d. Approximate Travel Speed: 48 inches in 27 seconds.
    e. Voltage: 110-120V.

4. Safety Belt: Provide lift with fail-safe inertial safety belt system
5. Operating Pan: 2¾ by 20 by 20 inches, 1/8-inch steel pan with grey powder coat paint finish for attachment of suspended projector.

    a. Projector Attachment: Mounted to operating pan with universal projector mount.

6. Cable Management: Provide lift with means for attachment of cables to rear scissor to eliminate cord tangles. Include 110V pre-wired power cable.
7. Ceiling Closure Panel: Steel closure panel with ceiling tile lip, suspended below project from rods attached to operating pan. Closure mounted with recess to allow attachment of acoustical ceiling panels.

    a. Trim: Manufacturer's standard.
    b. Color: To match ceiling tile or grid.

8. Controls: Remote, key-operated, three-position control switch installed in recessed device box with flush cover plate matching other electrical device cover plates in room where switch is installed.

    a. Provide with one (1) control switch.
    b. Provide power supply for low-voltage systems if required.

PART 3 - EXECUTION

3.1 EXAMINATION

A. Examine pathway elements intended for cables. Check raceways, cable trays, and other elements for compliance with space allocations, installation tolerances, hazards to cable installation, and other conditions affecting installation. Proceed with installation only after unsatisfactory conditions have been corrected.

3.2 PREPARATION

A. Coordinate layout and installation of motorized projector lifts with ceiling construction and related components penetrating or above ceilings such as lighting fixtures, mechanical equipment, ductwork, and fire-suppression system.

B. Coordinate requirements for blocking, structural supports, bracing, and ceiling openings to ensure proper installation.

C. Coordinate location and requirements for power supply conduit, and wiring required.

3.3 INSTALLATION

A. Motorized Project Lifts:

1. Install lifts and controls at locations and heights as indicated on Drawings.
2. Install complete with necessary hardware, anchors, brackets, and fasteners in accordance with manufacturer's written instructions and as specified.

3.4 FIELD QUALITY CONTROL

A. Perform the following field tests and inspections and prepare test reports:

1. Operational Test: After installation of cables and connectors, demonstrate product capability and compliance with requirements. Test each signal path for end-to-end performance from each end of all pairs installed. Remove temporary connections when tests have been satisfactorily completed.

B. Remove malfunctioning units, replace with new units, and retest as specified above.

3.5 DEMONSTRATION

A. Demonstrate operation of motorized projector lifts to Owner's designated representatives.

3.6 PROTECTION

A. Protect motorized projector lifts after installation from damage during construction operations. If damage occurs, remove and replace damaged components or entire unit as required to provide units in their original, undamaged condition.

END OF SECTION 115000

SECTION 115213 - PROJECTION SCREENS

PART 1 - GENERAL

1.1 RELATED DOCUMENTS

A. Drawings and general provisions of the Contract, including General and Supplementary Conditions and Division 01 Specification Sections, apply to this Section.

1.2 SUMMARY

A. Section Includes:

1. Electrically operated, front-projection screens and controls.

B. Related Requirements:

1. Section 055000 "Metal Fabrications" for metal support framing for front-projection screens.
2. Section 061000 "Rough Carpentry" for wood backing for screen installation.

1.3 DEFINITIONS

A. Gain: Ratio of light reflected from viewing surface material to that reflected perpendicularly from a magnesium carbonate surface as determined in accordance with SMPTE RP 94.

B. Half-Gain Angle: The angle, measured from the axis of the viewing surface to the most central position on a perpendicular plane through the horizontal centerline of the viewing surface, where the gain is half of the peak gain.

1.4 ACTION SUBMITTALS

A. Product Data: For each type of product.

B. Shop Drawings: Show layouts and types of front-projection screens. Include the following:

1. Drop heights.
2. For end-mounted motors, location of screen centerline relative to ends of screen case.
3. Anchorage details, including connection to supporting structure for suspended units.
4. Details of juncture of exposed surfaces with adjacent finishes.
5. For electrically operated units, wiring diagrams and location of wiring connections.
6. Accessories.

C. Samples: For each type of exposed finish and for each color and finish specified, in manufacturer's standard sizes.

1.5 CLOSEOUT SUBMITTALS

A. Maintenance Data: For front-projection screens to include in maintenance manuals.

1.6 DELIVERY, STORAGE, AND HANDLING

A. Environmental Limitations: Do not deliver front-projection screens until spaces are enclosed and weathertight, wet work in installation spaces is complete and dry, and temporary or permanent HVAC system is operating and maintaining ambient temperature and humidity conditions at occupancy levels during the remainder of the construction period.

B. Store front-projection screens in manufacturer's protective packaging and according to manufacturer's written instructions.

1.7 COORDINATION

A. Coordinate layout and installation of front-projection screens with adjacent construction, including ceiling suspension systems, light fixtures, HVAC system components, fire-suppression system, and partitions.

PART 2 - PRODUCTS

2.1 MANUFACTURERS

A. Source Limitations for Projection Screens: Obtain front-projection screens from single manufacturer. Obtain viewing surfaces and accessories, including mounting hardware, from screen manufacturer.

2.2 PERFORMANCE REQUIREMENTS

A. Viewing-Surface and Masking Materials:

1. Mildew-Resistance Rating: Zero or 1 when tested in accordance with ASTM G 21.
2. Flame Resistance: Passes NFPA 701.
3. Flame-Spread Index: Not greater than 75 when tested in accordance with ASTM E84.

2.3 ELECTRICALLY OPERATED, FRONT-PROJECTION SCREENS

A. General Requirements: Manufacturer's standard units consisting of case, screen, motor, controls, mounting accessories, and other components necessary for a complete installation.

1. Electrical Components, Devices, and Accessories: Listed and labeled as defined in NFPA 70, by a qualified testing agency, and marked for intended location and application.
2. Screen Mounting: Top edge securely anchored to rigid metal roller and bottom edge formed into a pocket holding a metal rod with ends of rod protected by plastic caps.

B. Surface-Mounted, Metal-Encased, Electrically Operated Screens: Motor-in-roller unit with screen case fabricated from formed-steel sheet or from aluminum extrusions with manufacturer’s standard finish and matching end caps.

1. Basis-of-Design:

a. Legrand North America, LLC (Legrand AV); **Da-Lite Tensioned Advantage Series**

2. Available Manufacturers: Subject to compliance with requirements, available manufacturers that may be incorporated into the Work include, but are not limited to, the following:

   a. Bretford, Inc.
   b. Draper, Inc.
   c. Substitutions: Under provisions of Section 012500 “Substitution Procedures”.

3. Motor in Roller: Instant-reversing motor of size and capacity recommended in writing by screen manufacturer; with permanently lubricated ball bearings, automatic thermal-overload protection, preset limit switches to automatically stop screen in up and down positions, and positive-stop action to prevent coasting. Mount motor inside roller with vibration isolators to reduce noise transmission.
4. Controls: Remote, key-operated, three-position control switch installed in recessed device box with flush cover plate matching other electrical device cover plates in room where switch is installed.

   a. Provide with one (1) control switch.
   b. Provide power supply for low-voltage systems if required.

5. Surface-Mounting Configuration: Recessed in ceiling trough indicated on Drawings, with concealed mounting.
6. Screen-Case Color: As selected by Architect and Owner from manufacturer's entire range.
7. Free-Hanging, Matte Viewing Surface: White, 1.0 minimum peak gain and 60-degree minimum half-gain angle.
8. Edge Treatment: Manufacturer's standard masking borders.
9. Size of Viewing Surface: 65 by 116 inches.

PART 3 - EXECUTION

3.1 INSTALLATION

A. Install front-projection screens at locations indicated on Drawings to comply with manufacturer's written instructions.

B. Install front-projection screens with screen cases in position and in relation to adjoining construction indicated. Securely anchor to supporting substrate in a manner that produces a smoothly operating screen that, when lowered, has flat viewing surface and plumb vertical edges.

   1. Install low-voltage controls in accordance with NFPA 70 and complying with manufacturer's written instructions.

      a. Wiring Method: Install wiring in raceway except in accessible ceiling spaces and in gypsum board partitions where unenclosed wiring method may be used. Use UL-listed plenum cable in environmental air spaces, including plenum ceilings. Conceal raceway and cables except in unfinished spaces.

2. Test electrically operated units to verify that screen controls, limit switches, closures, and other operating components are in optimum functioning condition.
3. Test manually operated units to verify that screen-operating components are in optimum functioning condition.

END OF SECTION 115213

SECTION 122413 - ROLLER WINDOW SHADES

PART 1 - GENERAL

1.1 RELATED DOCUMENTS

A. Drawings and general provisions of the Contract, including General and Supplementary Conditions and Division 01 Specification Sections, apply to this Section.

1.2 SUMMARY

A. Section Includes:

1. Manually operated roller shades with single rollers.

B. Related Requirements:

1. Section 061000 "Rough Carpentry" for wood blocking and grounds for mounting roller shades and accessories.

1.3 ACTION SUBMITTALS

A. Product Data: For each type of product.

1. Include styles, material descriptions, construction details, dimensions of individual components and profiles, features, finishes, and operating instructions for roller shades.

B. Shop Drawings: Show fabrication and installation details for roller shades, including shadeband materials, their orientation to rollers, and their seam and batten locations.

C. Samples: For each exposed product and for each color and texture specified, 10 inches long.

D. Product Schedule: For roller shades. Use same designations indicated on Drawings.

1.4 INFORMATIONAL SUBMITTALS

A. Qualification Data: For Installer.

B. Product Certificates: For each type of shadeband material.

C. Product Test Reports: For each type of shadeband material, for tests performed by manufacturer and witnessed by a qualified testing agency.

1.5 CLOSEOUT SUBMITTALS

A. Operation and Maintenance Data: For roller shades to include in maintenance manuals.

1.6 MAINTENANCE MATERIAL SUBMITTALS

A. Furnish extra materials that match products installed and that are packaged with protective covering for storage and identified with labels describing contents.

1. Roller Shades: Full-size units equal to five percent (5%) of quantity installed for each size, color, and shadeband material indicated, but no fewer than two (2) units.

1.7 QUALITY ASSURANCE

A. Installer Qualifications: Fabricator of products.

1.8 DELIVERY, STORAGE, AND HANDLING

A. Deliver roller shades in factory packages, marked with manufacturer, product name, and location of installation using same designations indicated on Drawings.

1.9 FIELD CONDITIONS

A. Environmental Limitations: Do not install roller shades until construction and finish work in spaces, including painting, is complete and dry and ambient temperature and humidity conditions are maintained at the levels indicated for Project when occupied for its intended use.

B. Field Measurements: Where roller shades are indicated to fit to other construction, verify dimensions of other construction by field measurements before fabrication and indicate measurements on Shop Drawings. Allow clearances for operating hardware of operable glazed units through entire operating range. Notify Architect of installation conditions that vary from Drawings. Coordinate fabrication schedule with construction progress to avoid delaying the Work.

PART 2 - PRODUCTS

2.1 MANUFACTURERS

A. Basis-of-Design Product:

1. SWF Contract

B. Manufacturers: Subject to compliance with requirements, available manufacturers offering products that may be incorporated into the Work include, but are not limited to, the following:

1. Draper, Inc.
2. Hunter Douglas
3. MechoShade Systems, Inc.
4. OEM Shades Inc.
5. Rollease Acmeda
6. Substitutions: Under provisions of Section 012500 “Substitution Procedures”.

C. Source Limitations: Obtain roller shades from single source from single manufacturer.

2.2 MANUALLY OPERATED SHADES WITH SINGLE ROLLERS

A. Chain-and-Clutch Operating Mechanisms: With continuous-loop bead chain and clutch that stops shade movement when bead chain is released; permanently adjusted and lubricated.

1. Bead Chains: Stainless-steel.

a. Loop Length: Full length of roller shade.
b. Limit Stops: Provide upper and lower ball stops.
c. Chain-Retainer Type: Chain tensioner, sill mounted.

2. Spring Lift-Assist Mechanisms: Manufacturer's standard for balancing roller-shade weight and lifting heavy roller shades.

a. Provide for shadebands that weigh more than 10 lb. or for shades as recommended by manufacturer, whichever criteria are more stringent.

B. Rollers: Corrosion-resistant steel or extruded-aluminum tubes of diameters and wall thicknesses required to accommodate operating mechanisms and weights and widths of shadebands indicated without deflection. Provide with permanently lubricated drive-end assemblies and idle-end assemblies designed to facilitate removal of shadebands for service.

1. Roller Drive-End Location: Right side of inside face of shade.
2. Direction of Shadeband Roll: Regular, from back (exterior face) of roller.
3. Shadeband-to-Roller Attachment: Manufacturer's standard method.

C. Mounting Hardware: Brackets or endcaps, corrosion resistant and compatible with roller assembly, operating mechanism, installation accessories, and mounting location and conditions indicated.

D. Shadebands:

1. Shadeband Material: Light-blocking fabric and light-filtering fabric.
2. Shadeband Bottom (Hem) Bar: Steel or extruded aluminum.

a. Type: Enclosed in sealed pocket of shadeband material.

E. Installation Accessories:

1. Front Fascia: Aluminum extrusion that conceals front and underside of roller and operating mechanism and attaches to roller endcaps without exposed fasteners.

a. Shape: L-shaped.
b. Height: Manufacturer's standard height required to conceal roller and shadeband assembly when shade is fully open, but not less than 3 inches.

2. Endcap Covers: To cover exposed endcaps.
3. Installation Accessories Color and Finish: As selected from manufacturer's entire range.

2.3 SHADEBAND MATERIALS

A. Shadeband Material Flame-Resistance Rating: Comply with NFPA 701. Testing by a qualified testing agency. Identify products with appropriate markings of applicable testing agency.

B. Light-Blocking Fabric: Opaque fabric, stain and fade resistant.

1. Basis-of-Design Product: **Parallell**
2. Source: Roller-shade manufacturer.
3. Type: PVC and polyester with acrylic backing.
4. Roll Width: Per manufacturer.
5. Orientation on Shadeband: Up the bolt.
6. Color: **RS-1**, as indicated in Section 090000 "Schedule of Finishes".

C. Light-Filtering Fabric: Woven fabric, stain and fade resistant.

1. Basis-of-Design Product: **Crosshatch R300**
2. Source: Roller-shade manufacturer.
3. Type: PVC-coated polyester
4. Weave: Basketweave.
5. Roll Width: Per manufacturer.
6. Orientation on Shadeband: Up the bolt.
7. Openness Factor and Color: **RS-2**, as indicated in Section 090000 "Schedule of Finishes".

2.4 ROLLER-SHADE FABRICATION

A. Product Safety Standard: Fabricate roller shades to comply with WCMA A 100.1, including requirements for flexible, chain-loop devices; lead content of components; and warning labels.

B. Unit Sizes: Fabricate units in sizes to fill window and other openings as follows, measured at 74 deg F (23 deg C):

1. Between (Inside) Jamb Installation: Width equal to jamb-to-jamb dimension of opening in which shade is installed less ¼-inch per side or ½-inch total, plus or minus 1/8-inch. Length equal to head-to-sill or -floor dimension of opening in which shade is installed less ¼-inch, plus or minus 1/8-inch.

C. Shadeband Fabrication: Fabricate shadebands without battens or seams to extent possible except as follows:

1. Vertical Shades: Where width-to-length ratio of shadeband is equal to or greater than 1:4, provide battens and seams at uniform spacings along shadeband length to ensure shadeband tracking and alignment through its full range of movement without distortion of the material.

PART 3 - EXECUTION

3.1 EXAMINATION

A. Examine substrates, areas, and conditions, with Installer present, for compliance with requirements for installation tolerances, operational clearances, and other conditions affecting performance of the Work.

B. Proceed with installation only after unsatisfactory conditions have been corrected.

3.2 ROLLER-SHADE INSTALLATION

A. Install roller shades level, plumb, and aligned with adjacent units according to manufacturer's written instructions.

1. Opaque Shadebands: Located so shadeband is not closer than 2 inches to interior face of glass. Allow clearances for window operation hardware.

B. Roller Shade Locations: As indicated in Section 090000 “Schedule of Finishes”.

3.3 ADJUSTING

A. Adjust and balance roller shades to operate smoothly, easily, safely, and free from binding or malfunction throughout entire operational range.

3.4 CLEANING AND PROTECTION

A. Clean roller-shade surfaces after installation, according to manufacturer's written instructions.

B. Provide final protection and maintain conditions, in a manner acceptable to manufacturer and Installer, that ensure that roller shades are without damage or deterioration at time of Substantial Completion.

C. Replace damaged roller shades that cannot be repaired, in a manner approved by Architect, before time of Substantial Completion.

END OF SECTION 122413

SECTION 123661.16 - SOLID SURFACING COUNTERTOPS

PART 1 - GENERAL

1.1 RELATED DOCUMENTS

A. Drawings and general provisions of the Contract, including General and Supplementary Conditions and Division 01 Specification Sections, apply to this Section.

1.2 SUMMARY

A. Section Includes:

1. Solid surface material countertops.
2. Solid surface material backsplashes.
3. Solid surface material end splashes.
4. Solid surface material apron fronts.
5. Solid surface material sills.

B. Related Requirements:

1. Section 224216.16 "Commercial Sinks" for sinks and plumbing fittings.

1.3 ACTION SUBMITTALS

A. Product Data: For solid surfacing materials.

B. Shop Drawings: For countertops. Show materials, finishes, edge and backsplash profiles, and methods of joining, and cutouts for plumbing fixtures.

1. Show locations and details of joints.
2. Show direction of directional pattern, if any.

C. Samples: For the following products:

1. Solid surfacing material, 6 inches square.

1.4 INFORMATIONAL SUBMITTALS

A. Qualification Data: For fabricator.

1.5 CLOSEOUT SUBMITTALS

A. Maintenance Data: For solid surface materials to include in maintenance manuals. Include Product Data for care products used or recommended by Installer and names, addresses, and telephone numbers of local sources for products.

1.6 QUALITY ASSURANCE

A. Fabricator Qualifications: Shop that employs skilled workers who custom-fabricate countertops similar to that required for this Project, and whose products have a record of successful in-service performance.

B. Installer Qualifications: Fabricator of countertops.

1.7 FIELD CONDITIONS

A. Field Measurements: Verify dimensions of countertops by field measurements after base cabinets are installed but before countertop fabrication is complete.

1.8 COORDINATION

A. Coordinate locations of utilities that will penetrate countertops or backsplashes.

PART 2 - PRODUCTS

2.1 SOLID SURFACE COUNTERTOP MATERIALS

A. Solid Surface Material: Homogeneous-filled plastic resin complying with ICPA SS-1.

1. Basis-of-Design Product:

a. E. I. du Pont de Nemours and Company; **Corian Solid Surface**
b. Wilsonart International

2. Manufacturers: Subject to compliance with requirements, available manufacturers offering products that may be incorporated into the Work include, but are not limited to, the following:

a. Avonite Surfaces by Aristech Acrylics LLC
b. Formica Corporation
c. LG Chemical, Ltd.
d. Substitutions: Under provisions of Section 012500 “Substitution Procedures”.

3. Type: Provide Standard type unless Special Purpose type is indicated.
4. Colors and Patterns: **SS**, as indicated in Section 090000 “Schedule of Finishes”.

B. Medium-Density Fiberboard: ANSI A208.2, Grade 130, made for wet environments.

2.2 COUNTERTOP FABRICATION

A. Fabricate countertops according to solid surface material manufacturer's written instructions and to the AWI/AWMAC/WI's "Architectural Woodwork Standards."

1. Grade: **Custom**.

B. Configuration:

1. Front: As indicated on Drawings.
2. Backsplash: Straight, slightly eased at corner.
3. End Splash: Matching backsplash.

C. Countertops and Sills: ½-inch-thick, solid surface material with front edge built up with same material.

D. Splashes: ½-inch-thick, solid surface material.

E. Fabricate tops with shop-applied edges unless otherwise indicated. Comply with solid surface material manufacturer's written instructions for adhesives, sealers, fabrication, and finishing.

1. Fabricate with loose back and end splashes for field assembly.

F. Joints: Fabricate countertops without joints.

G. Cutouts and Holes:

1. Undercounter Plumbing Fixtures: Make cutouts for fixtures in shop using template or pattern furnished by fixture manufacturer. Form cutouts to smooth, even curves.

a. Provide vertical edges, slightly eased at juncture of cutout edges with top and bottom surfaces of countertop and projecting 3/16-inch into fixture opening.

2. Counter-Mounted Plumbing Fixtures: Prepare countertops in shop for field cutting openings for counter-mounted fixtures. Mark tops for cutouts and drill holes at corners of cutout locations. Make corner holes of largest radius practical.
3. Fittings: Drill countertops in shop for plumbing fittings and similar items.

2.3 INSTALLATION MATERIALS

A. Adhesive: Product recommended by solid surface material manufacturer. Adhesives shall not contain urea formaldehyde.

B. Sealant for Countertops: Comply with applicable requirements in Section 079200 "Joint Sealants."

C. Countertop Angles: Medium-duty, 14-gauge steel angle meeting or exceeding ASTM A 1011; 1-5/8-inch by 2-38-inch with 9/16-inch holes spaced 1-7/8-inch on center and 13/16-inch from end.

1. Product: Subject to compliance with requirements, provide **PA238** by Unistrut, a part of Atkore International, Inc. or approved equal.

D. Countertop Brackets: Heavy-duty, folded steel design with ¾ inch by 1½ inch notching system and two (2) conduit holes. Provide size required for installation.

1. Product: Subject to compliance with requirements, provide **EH-1824** by Rakks, Inc. or approved equal.

PART 3 - EXECUTION

3.1 EXAMINATION

A. Examine substrates to receive solid surface material countertops and conditions under which countertops will be installed, with Installer present, for compliance with requirements for installation tolerances and other conditions affecting performance of countertops.

B. Proceed with installation only after unsatisfactory conditions have been corrected.

3.2 INSTALLATION

A. Install countertops level to a tolerance of 1/8-inch in 8 feet, ¼-inch maximum. Do not exceed 1/64-inch difference between planes of adjacent units.

B. Fasten subtops to base units by screwing through subtops into cornerblocks of base units. Shim as needed to align subtops in a level plane.

C. Secure countertops to subtops with adhesive according to solid surface material manufacturer's written instructions. Align adjacent surfaces and, using adhesive in color to match countertop, form seams to comply with manufacturer's written instructions. Carefully dress joints smooth, remove surface scratches, and clean entire surface.

D. Install splashes by adhering to wall and countertops with adhesive. Mask areas of countertops and splashes adjacent to joints to prevent adhesive smears.

E. Install aprons to backing and countertops with adhesive. Mask areas of countertops and splashes adjacent to joints to prevent adhesive smears. Fasten by screwing through backing. Predrill holes for screws as recommended by manufacturer.

F. Complete cutouts not finished in shop. Mask areas of countertops adjacent to cutouts to prevent damage while cutting. Make cutouts to accurately fit items to be installed, and at right angles to finished surfaces unless beveling is required for clearance. Ease edges slightly to prevent snipping.

   1. Seal edges of cutouts in subtops by saturating with varnish.

G. Apply sealant to gaps at walls; comply with Section 079200 "Joint Sealants."

END OF SECTION 123661.16